# Connectors
## for Cold-Formed Steel Construction

C-CF-2020 | (800) 999-5099 | strongtie.com

SIMPSON Strong-Tie®

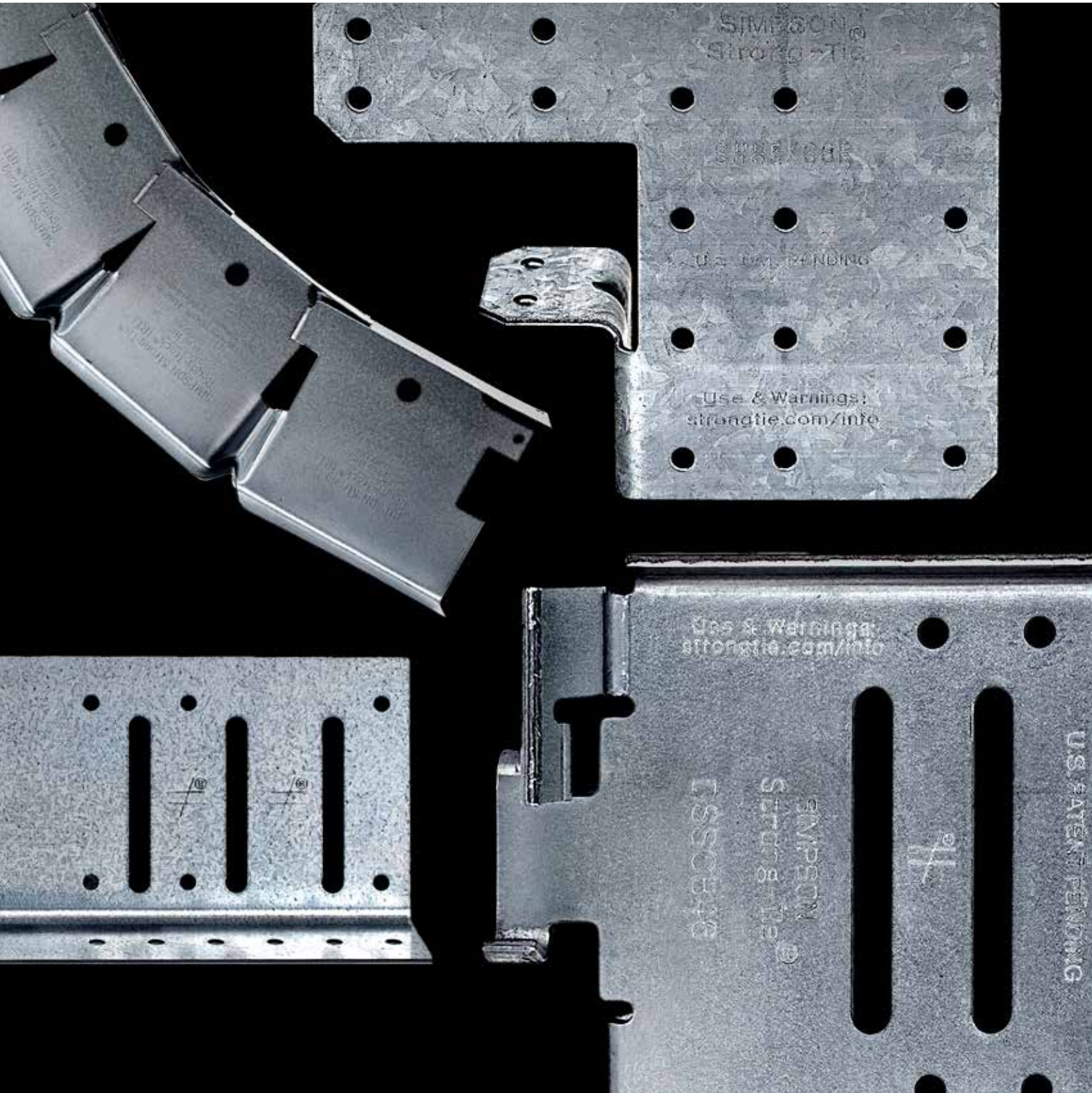

# Commercial Connector Solutions

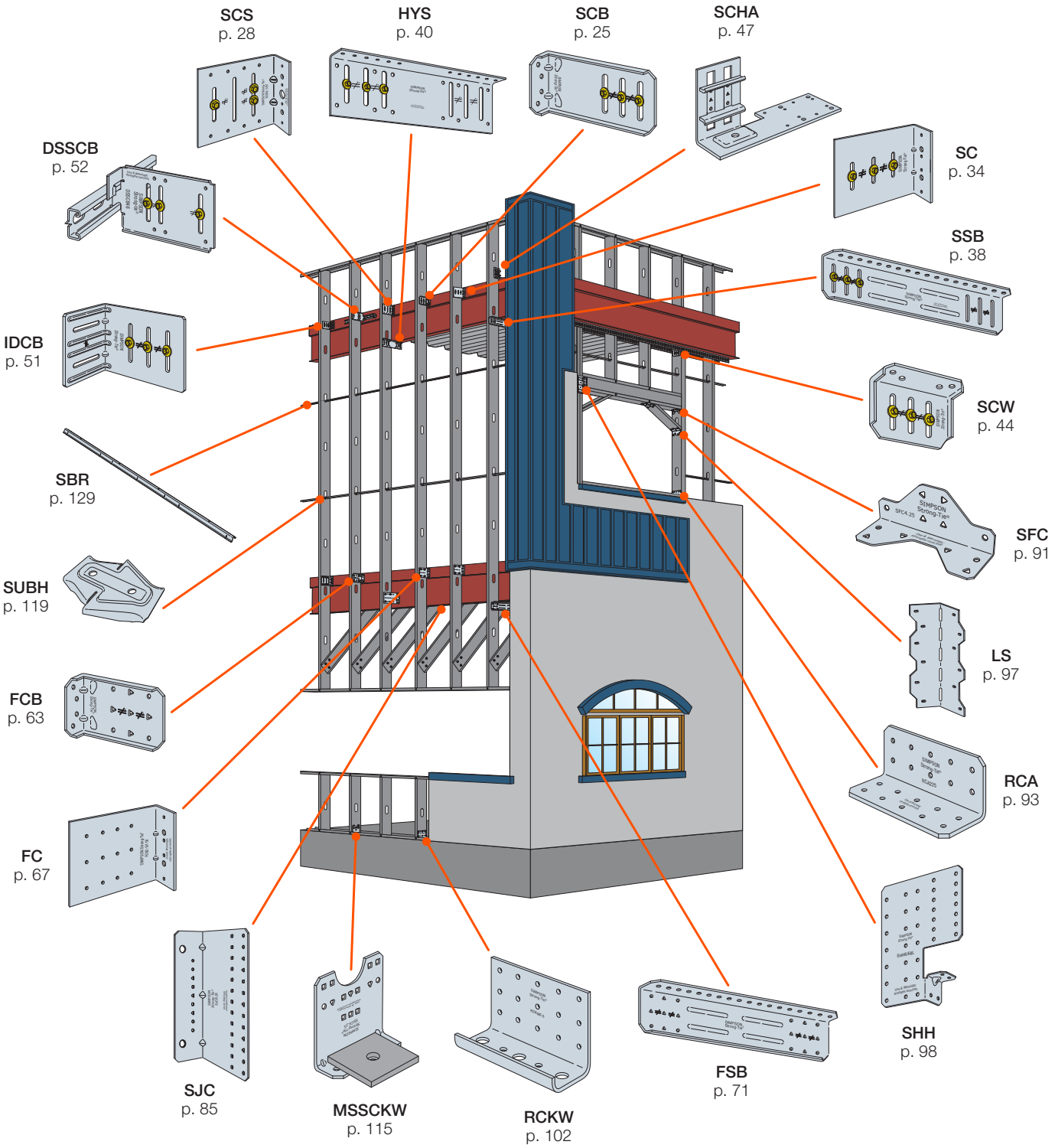


C-CF-2020 ©2020 SIMPSON STRONG-TIE COMPANY INC.

# Mid-Rise Connector Solutions

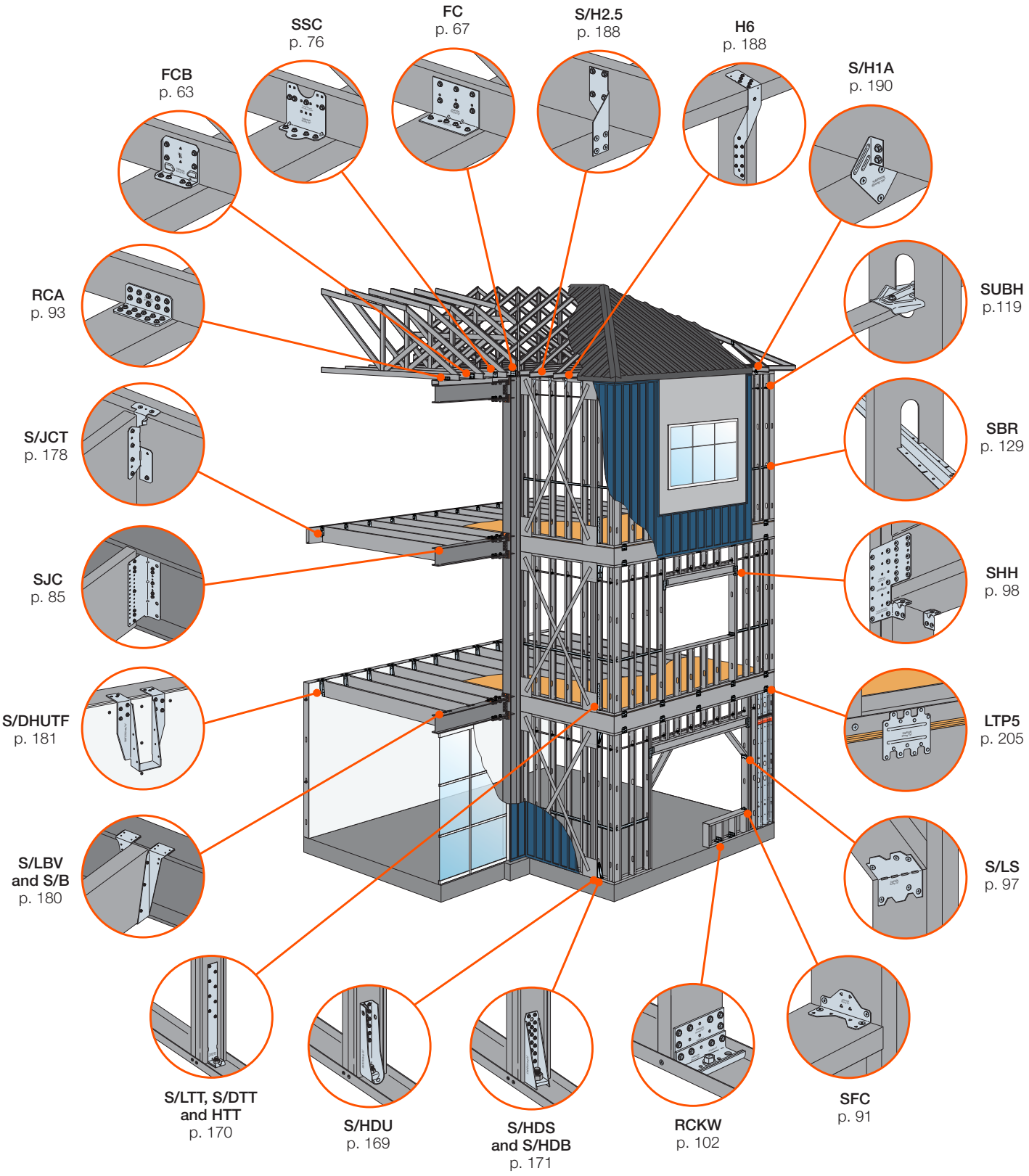


C-CF-2020 ©2020 SIMPSON STRONG-TIE COMPANY INC.

# Alphabetical Index

SIMPSON Strong-Tie®


**ABS** Anchor Bolt Stabilizer ..... 147

**ABL** Anchor Bolt Locator ..... 150

**AHEP** Adjustable Hip-End Purlin ..... 198

**AnchorMate®** Anchor Bolt Holder ..... 147

**Anchor Solutions for CFS Construction** ..... 153–154

**BP/BPS** Bearing Plates ..... 148

NEW **CFS Designer™** Software ..... 7, 21

**CMST** Coiled Strap ..... 204

**CMSTC** Coiled Strap ..... 204

**CNW** Coupler Nuts ..... 149

**Code Listing Key Chart** ..... 11

**Conversion Charts** ..... 16

**Corrosion Resistance** ..... 17–19

**CS** Coiled Strap ..... 140, 185, 204

**Custom Clips and Angles** ..... 117

✓ **DBC** Drywall Bridging Connector ..... 138–139

NEW ✓ **DBR** Spacer Bracers ..... 129–136

**DSP** Stud Plate Tie ..... 187

NEW ✓ **DSSCB** Bypass Framing Drift Strut Connector ..... 52–61

**DTC** Head-of-Wall Slide-Clip Application ... 46

**DTC** Roof Truss Clips ..... 199

**DTT1Z** Tension Tie ..... 170

**Fasteners for CFS Construction** ..... 167

**FC** Bypass Framing Fixed-Clip Connector ..... 67–70

✓ **FCB** Bypass Framing Fixed-Clip ..... 63–66

**FHA** Strap Tie ..... 202-203

**FSB** Bypass Framing Fixed-Clip Strut Connector ..... 71–72

**H** Hybrid Connectors ..... 189

**H** Seismic and Hurricane Ties ..... 188

**H10S** Seismic and Hurricane Tie ... 188, 196

**HETA/HHETA** Embedded Truss Anchors ..... 192–193

**HPA** Purlin Anchor ..... 173

**HRS** Strap Tie ..... 202-203

**HSCNW** High-Strength Coupler Nut ..... 149

**HTS** Twist Strap ..... 194

**HTSM** Twist Strap ..... 191

**HTT** Tension Tie ..... 170

**HUC** Hanger ..... 182

NEW **HYS** Hybrid Strut ..... 40–43

**ICFVL** Ledger Connector ..... 184

**IDCB** Drift-Clip Bypass Framing Connector ..... 51

**L** Skewable Angles ..... 97, 183

**LBP** Bearing Plate ..... 148

**LS** Skewable Angles ..... 97, 183, 198

**LSTA** Strap Tie ..... 202-203

✓ **LSTHD** Strap Tie Holdowns ..... 174–175

**LSTI** Strap Tie ..... 202-203

**LSUBH** Bridging Connector ..... 119–128

**LTA2** Masonry Connector ..... 196

**LTB** Bridging ..... 141, 185

**LTP5** Framing Anchor ..... 205

**LTS** Twist Strap ..... 194

**MASA** Mudsill Anchor ..... 151

**MASAP** Mudsill Anchor ..... 151

**META** Embedded Truss Anchors .. 192–193

**Metric Conversions** ..... 16

✓ **MSCB** Bypass Framing Slide-Clip ..... 25–27

**MSJC** Steel-Joist Connector ..... 74–75, 85–90, 177

**MSSCKW** Kneewall Connector ..... 115–116

**MST** Strap Tie ..... 202-203

**MSTA** Strap Tie ..... 202-203

**MSTC** Strap Tie ..... 202-203

**MSTI** Strap Tie ..... 202-203

**MSUBH** Bridging Connector ..... 119–128

**MTS** Twist Strap ..... 194

**MTSM** Twist Strap ..... 191

**PA** Purlin Anchor ..... 173

**PAB/PABH** Anchor Bolts ..... 164

**PDPA** Powder-Driven Pin ..... 160–162

**PDPAT** Powder-Driven Top-Hat Pin ..... 160–161

**PS** Strap Tie ..... 202-203

**PSPNZ** Protecting Shield Plate ..... 211

**RCA** Rigid Connector Angles ..... 93–96

NEW ✓ **Ready Product** Ready-Angle® Framing ..... 144

NEW ✓ **Ready Product** Ready-Arch® Framing ..... 143

NEW ✓ **Ready Product** Ready-Hat® Framing ..... 144

NEW ✓ **Ready Product** Ready-Track® Framing ..... 143


**VALUE ENGINEERED** This icon indicates a product that is preferable to similar connectors because of a) easier installation, b) higher loads, c) lower installed cost, or a combination of these features.

C-CF-2020 ©2020 SIMPSON STRONG-TIE COMPANY INC.

# Alphabetical Index


**Ready Bender™** Ready Track™ Bender Custom Framing Tool ..... 145

**Ready Bender™** Ready Trim™ Bender Custom Framing Tool ..... 145

**RCKW** Kneewall Connectors ..... 102–114

**RFB** Retrofit Bolt ..... 164

**S/B** Hanger ..... 180

**S/DHUTF** Drywall Hangers ..... 181

**S/DTT** Tension Tie ..... 170

**S/H** Seismic and Hurricane Tie ..... 188

**S/H1A** Seismic and Hurricane Tie ..... 190

**S/HDB** Holdown ..... 171–172

**S/HDS** Holdown ..... 171–172

**S/HDU** Holdown ..... 169

**S/HGAM** Masonry Connector ..... 196

**S/HJCT** Hanger ..... 178–179

**S/HTC** Heavy Truss Clip ..... 199

**S/JCT** Hanger ..... 178–179

**S/LBV** Hanger ..... 180

**S/LS** Skewable Angle ..... 97, 183, 198

**S/LTT** Tension Tie ..... 170

**S/VGT2.5** Variable-Pitch Girder Tiedown ..... 195

**SB** Anchor Bolts ..... 163

**SBR** Spacer Bracers ..... 129–136

**SC** Bypass Framing Slide-Clip Connector ..... 34–37

**SCB** Bypass Framing Slide-Clip ..... 25–27

**SCHA** Slide-Clip Connectors for Horizontal Anchorage ..... 47–49

**SCS** Seismic Bypass Framing Connector ..... 28–33

**SCW** Head-of-Wall Slide-Clip ..... 44–45

**SFC** Steel Framing Connector ..... 74–75, 91–92, 137

**SHH** Header Hanger ..... 98–101

**SJC** Steel-Joist Connector ..... 74–75, 85–90, 177

**SP** Stud Plate Tie ..... 187

**Special Order Custom Clips and Angles** ..... 117

**SSB** Bypass Framing Slide-Clip Strut ..... 38–39

**SSC** Steel-Stud Connector ..... 74–84, 137

**SSP** Stud Plate Tie ..... 187

**SSTB®** Anchor Bolt ..... 163

**ST** Strap Tie ..... 202-203

**STC** Roof Truss Clip ..... 199

**STCT** Roof Truss Clip ..... 199

**Steel Strong-Wall®** Shearwalls ..... 207

**STHD** Strap Tie Holdowns ..... 174–175

**StrapMate®** Strap Holder ..... 147

**Strong Frame®** Special Moment Frame ..... 208–209

**SUBH** Bridging Connector ..... 119–128

**TB** Bridging ..... 185

**Titen HD®** Heavy-Duty Screw Anchor ..... 155–159

**TJC** Jack Truss and Rafter Connector ..... 197

**TSBR** Truss Spacer Restraint ..... 201

**TSP** Stud Plate Tie ..... 187

**VGT** Variable-Pitch Girder Tiedown ..... 195

**WP** Hangers ..... 182



General Information 10–23

Deflection Connectors 24–49

Drift Clips 50–61

Rigid Connectors 62–117

Bridging and Bracing Connectors 118–141

Curved Hand-Bendable Framing 142–145

Concrete Connectors 146–151

Anchors 152–165

Fasteners 166–167

Holdowns and Tension Ties 168–175

Joist Framing Connectors 176–185

Roof, Truss and Rafter Connectors, Ties and Straps 186–199

Lateral Connectors, Ties and Straps 200–205

Lateral Systems 206–209

Miscellaneous 210–211


C-CF-2020 ©2020 SIMPSON STRONG-TIE COMPANY INC.

# Introduction

For more than 60 years, Simpson Strong-Tie has focused on creating structural products that help people build safer and stronger homes and buildings. A leader in structural systems research and technology, Simpson Strong-Tie is one of the largest suppliers of structural building products in the world. The Simpson Strong-Tie commitment to product development, engineering, testing and training is evident in the consistent quality and delivery of its products and services.

For more information, visit the company's website at **strongtie.com**.

**The Simpson Strong-Tie Company Inc. No-Equal® pledge includes:**

- Quality products value-engineered for the lowest installed cost at the highest-rated performance levels
- The most thoroughly tested and evaluated products in the industry
- Strategically located manufacturing and warehouse facilities
- National code agency listings
- The largest number of patented connectors in the industry
- Global locations with an international sales team
- In-house R&D and tool and die professionals
- In-house product testing and quality control engineers
- Support of industry groups including AISI, AITC, ASTM, ASCE, AWC, AWPA, ACI, AISC, CSI, CFSEI, ICFA, NBMDA, NLBMDA, SDI, SETMA, SFA, SFIA, STAFDA, SREA, NFBA, TPI, WDSC, WIJMA, WTCA and local engineering groups

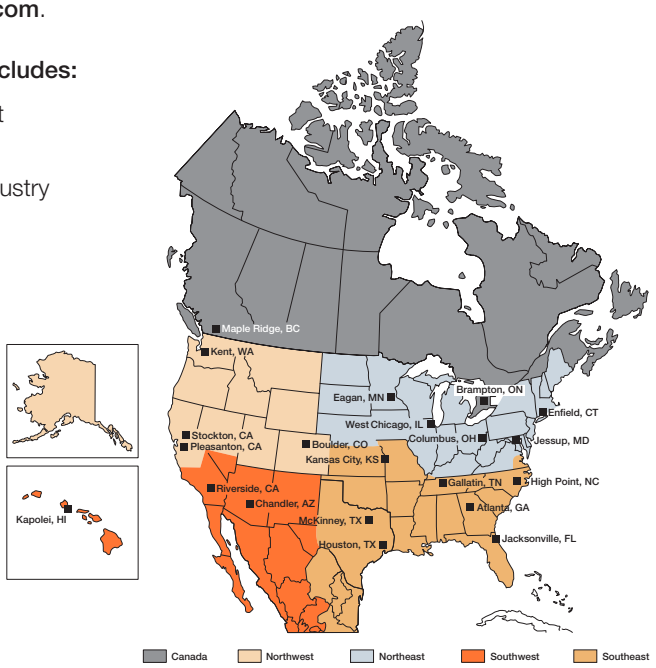


## The Simpson Strong-Tie Quality Policy

We help people build safer structures economically. We do this by designing, engineering and manufacturing No-Equal structural connectors and other related products that meet or exceed our customers' needs and expectations. Everyone is responsible for product quality and is committed to ensuring the effectiveness of the Quality Management System.

Karen Colonias
Chief Executive Officer

## Getting Fast Technical Support

When you call for engineering technical support, having the following information on hand will help us to serve you promptly and efficiently:

- Which Simpson Strong-Tie® catalog are you using? *(See the front cover for the catalog number.)*
- Which Simpson Strong-Tie product are you using?
- What are your application and load requirement?
- What are the carried and/or supporting members' size, gauge and strength?

## We Are ISO 9001:2015 Registered

Simpson Strong-Tie is an ISO 9001:2015 registered company. ISO 9001:2015 is an internationally-recognized quality assurance system that lets our domestic and international customers know that they can count on the consistent quality of Simpson Strong-Tie® products and services.

**(800) 999-5099 | strongtie.com**

All rights reserved. This catalog may not be reproduced in whole or in part without the prior written approval of Simpson Strong-Tie Company Inc.

C-CF-2020 ©2020 SIMPSON STRONG-TIE COMPANY INC.

# New Products for 2020

Version 3

## Simpson Strong-Tie® CFS Designer™ Software

Simpson Strong-Tie CFS Designer gives cold-formed steel (CFS) designers the ability to design CFS beam-column members according to AISI specifications as well as analyze complex beam loading and span conditions. Intuitive design tools automate common CFS systems such as typical walls, openings, floor joists with unbalanced live-load combinations, eight-story load-bearing systems, and shearwalls up to eight stories. Version 3 is now equipped with a low wall and wind design module.

**See p. 21 for more information.**

## DSSCB Bypass Framing Drift Strut Connector

With prepunched slots and round holes, the DSSCB is a dual-function connector that can be used for slide-clip and fixed-clip applications. The DSSCB is used to support cold-formed steel bypass framing to the edge of a floor slab. The DSSCB simplifies installation by allowing installers for panelized construction to install finished panels while working off the top of the slab without the need to predrill or preinstall anchors for each clip.

**See pp. 52–61 for more information.**

## Updated Design

### RCKW Kneewall Connectors

The Simpson Strong-Tie® RCKW rigid connectors have been developed to resist overturning moment at the base of exterior kneewalls and parapets as well as interior partial-height walls. These connectors have versatile options for attachment to structure. Attaching to concrete the RCKW has a single-bolt solution (large center hole) at edge of slab or two-bolt solution (large outer holes) offering higher capacity anchorage away from edge of slabs. The connector also has smaller holes that permit anchorage to structural steel.

**See pp. 102–114 for more information.**

## SHH Header Hanger

The SHH steel header hanger is used to support traditional CFS box headers that are fabricated with top and bottom tracks, as well as large-flange lay-in headers that are common in curtain-wall construction. The connector geometry minimizes drywall buildup, and the screw count has been minimized through extensive testing. A wide array of value-engineered hole patterns are available that will accommodate different load levels while minimizing installed cost.

**See pp. 98–101 for more information.**

C-CF-2020 ©2020 SIMPSON STRONG-TIE COMPANY INC.

# New Products for 2020

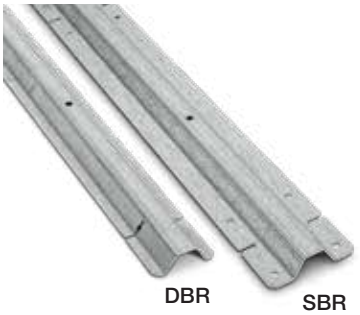


## Updated Design

### SBR and DBR Spacer Bracers

Specify the only bridging connectors on the market with load ratings based on assembly testing. The new Simpson Strong-Tie® SBR and DBR spacer bracers come with load data based on assembly testing so you can mitigate risk and maximize design confidence. The tabulated design values and precision-engineered slots make it easier to provide a value-engineered solution to your customers. The DBR slot design has been redesigned to strengthen the part and provide a better and easier installation.

**See pp. 129–136 for more information.**

Slide-Clip Application

Fixed-Clip Application

### HYS Hybrid Strut

The HYS hybrid strut is the only CFS strut on the market designed and tested for use as either a slide or a rigid clip. Commonly used at the bottom of a steel beam to accommodate large standoff conditions, the HYS strut attaches to the structure with screws, powder-actuated fasteners or welds.

**See pp. 40–43 for more information.**

### Ready-Track® Framing

Ready-Track framing is the fast and dependable way to frame curved walls on the jobsite. Simple to bend into smooth curves, it holds its shape without fasteners for easy positioning and installation.

**See p. 143 for more information.**

### Ready-Arch® Framing

Creating arched openings and designs is simpler than ever with Ready-Arch framing members. Round, elliptical or s-shapes are all easy to form on the jobsite without any cutting or additional reinforcement. Ready-Arch members are also ideal for more challenging applications where material needs to curve along the web.

**See p. 143 for more information.**

### Ready-Hat® Framing

Whether the plans call for framing over a CMU wall or concrete column or just a curved transition from wall to ceiling, the Ready-Hat furring and framing channel is right for the job. This versatile product is easy to form by hand into the exact shape needed and is secured to concrete or CMU walls with powder-driven fasteners or concrete screws.

**See p. 144 for more information.**

C-CF-2020 ©2020 SIMPSON STRONG-TIE COMPANY INC.

# New Products for 2020

## Ready-Angle® Framing

Ready-Angle framing angle adapts to almost any shape, and curves in multiple directions, so it's easy to form challenging compound curves and s-bends. Use two pieces to replicate curved track for steel and wood studs, to form arches of any depth quickly, or to produce finished corners that are ready for drywall.

**See p. 144 for more information.**

## Ready Track™ Bender Custom Framing Tool

The Ready Track Bender is a portable, on-the-jobsite tool that curves studs and track easily, accurately and conveniently by creating compound indentations at consistent intervals along the length of the material.

**See p. 145 for more information.**

## Ready Trim™ Bender Custom Framing Tool

The Ready Trim Bender allows the user to curve angles quickly, accurately and conveniently right on the jobsite by creating compound indentations at consistent intervals along the length of the angle. It eliminates the need for old-fashioned tin snips and the trial-and-error method of approximating the right radius.

**See p. 145 for more information.**

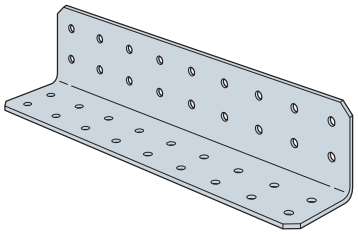

## RCA Rigid Connector Angle

The rigid connector angle (RCA) line will be extended to include 9" and 11" lengths. Looks for this often requested product the first quarter of 2020.

**See pp. 93–96 for more information.**

C-CF-2020 ©2020 SIMPSON STRONG-TIE COMPANY INC.

# How to Use this Catalog

SIMPSON Strong-Tie®

## New Products

New products are shown with the NEW symbol. There are also many new sizes within existing model series.

### Value Engineered

This icon indicates a product that is preferable to similar connectors because of a) easier installation, b) higher loads, c) lower installed cost, or a combination of these features.

### Extra Corrosion Protection

The teal arrow icon identifies products that are available with additional corrosion protection (ZMAX®, hot-dip galvanized or double-barrier coating). The SS teal arrow icon identifies products also available in stainless steel. Other products may also be available with additional protection; contact Simpson Strong-Tie for options. The end of the product name will indicate what type of extra corrosion protection is provided (Z = ZMAX, HDG = hot-dip galvanized or SS = stainless steel). Stainless products may need to be manufactured upon ordering. See pp. 17–19 for information on corrosion, and visit our website **strongtie.com/info** for more technical information on this topic.

# How We Determine Allowable Loads

Allowable loads in this catalog are determined by calculations and test criteria established by industry, such as ICC-ES Acceptance Criteria, IAPMO UES Evaluation Criteria, and AISI or ASTM test standards.

Cold-formed steel connectors are typically evaluated in accordance with ICC-ES AC261 — Acceptance Criteria for Connectors Used with Cold-Formed Steel Structural Members. Evaluation is based on a minimum of three static load tests in CFS assemblies or structural steel jigs. The published allowable load is the lower of the tested ultimate with a safety factor, load at ⅛" defection or the fastener calculation limits. Safety factors for ASD and resistance factors for LRFD are in accordance with AISI-S100 Section F.

Cast-in-place concrete products are tested in accordance with ICC-ES AC398 — Cast-in-Place, Cold-Formed Steel Connectors in Concrete for Light-Frame Construction or AC399 — Cast-in-Place Proprietary Bolts in Concrete for Light-Frame Construction. Tapping screw fasteners are evaluated per AC118 — Acceptance Criteria for Tapping Screw Fasteners Used in Steel-to-Steel Connections.

Where a test standard is unavailable, testing is conducted per sound engineering principles. Some tests include only portions of a product, such as purlin anchor tests, wherein only the embedded hook is tested, not the nailed or bolted section of the strap, which is calculated. Testing to determine allowable loads in this catalog is not done on connection systems in buildings. Testing is conducted in an IAS-accredited laboratory.

For detailed information regarding how Simpson Strong-Tie tests specific products, contact Simpson Strong-Tie.

# Load Table Explanation

**Dimensions:** This shows the product dimensions (material thickness, length and width in this case.) The product drawing includes these callouts as a cross-reference.

**Allowable Design Load:** The maximum load imposed on a connection during the life of a structure. There may be multiple design loads acting in different directions (up, down, lateral, perpendicular, etc.) imposed on a connection. When connectors are attached to two CFS members of different thicknesses, the designer shall use the thinner of the two members for selecting allowable loads.

**Model No.:** This is the Simpson Strong-Tie product name.

**Fasteners:** This shows the fastener quantity and type required to achieve the table loads.

**Thickness:** The thickness of the CFS supporting member to which the product is attached. Allowable load is based on this CFS supporting member thickness.

**Code Ref:** See p. 11 for the Code Reference Key Chart, to determine which code reports include this product.

| Model No. | Connector Material Thickness mil. (ga.) | Dimensions (in.) | | Fasteners (Total) | | | Allowable ASD Tension Load | | | Code Ref. |
|---|---|---|---|---|---|---|---|---|---|---|
| | | W | L | Rafter/Stud/Joist Thickness | | | 33 mil (20 ga.) | 43 mil (18 ga.) | 54 mil (16 ga.) | |
| | | | | 33 mil (20 ga.) | 43 mil (18 ga.) | 54 mil (16 ga.) | | | | |
| LSTA9 | 33 (20 ga.) | 1¼ | 9 | (8) #10 | (8) #10 | (8) #10 | 705 | 1,120 | 1,190 | IBC, FL, LA |
| LSTA12 | | 1¼ | 12 | (10) #10 | (10) #10 | (8) #10 | 885 | 1,190 | 1,190 | |
| LSTA15 | | 1¼ | 15 | (12) #10 | (12) #10 | (10) #10 | 1,060 | 1,190 | 1,190 | |
| LSTA18 | | 1¼ | 18 | (14) #10 | (12) #10 | (10) #10 | 1,190 | 1,190 | 1,190 | |

### Other Catalog Definitions:

**Deflection:** The distance a point moves when a load is applied.

**Nominal Tension Load (Strength):** The capacity of a structure or component to resist the effects of loads, as determined in accordance with AISI-S100 using specified material strengths and dimensions. Typically taken as the average value of at least three tests.

The Nominal Tension Load should not be compared against design loads (ASD, LRFD), but used only where the AISI Lateral Design Standard requires the holdown to have nominal tension load (strength) to resist the lesser of the amplified seismic load or the maximum force the system can deliver.

C-CF-2020 ©2020 SIMPSON STRONG-TIE COMPANY INC.

# Code Reference Column in Load Tables

Product evaluation agencies play an important role in the building industry providing an independent third-party review of architectural and structural products. Evaluations use publicly developed criteria to determine if the product meets the intent of the building code. Building officials can use product evaluation reports, often referred to as "code reports," to review and approve product use on a project.

The most prominent architectural and structural building product certification companies are ICC Evaluation Service (ICC-ES) and IAPMO Uniform Evaluation Service (IAPMO UES), which are both ANSI-accredited to ISO Guide 65 "General Requirements for Bodies Operating Product Certification Systems" as product certification entities. Simpson Strong-Tie currently maintains more than 60 ICC-ES ESR and IAPMO UES ER reports evaluated to the 2006, 2009, 2012, 2015 and 2018 International Building Code® (IBC) and International Residential Code® (IRC). We continue to submit product information to evaluation agencies in order to update reports or receive additional reports for products in compliance with the latest codes. Simpson Strong-Tie also has reports for the City of Los Angeles, California and the State of Florida.

We have simplified our code references to make this catalog easier to use. You can quickly determine whether a product has a code report by looking in the Code Reference column of the product load tables. A summary of the code references used is in the table below.

To determine which specific code report applies to a product and download a copy of the code report, you can use our Code Report Finder at **strongtie.com/codes**.

| Code Reference | Evaluation Agency | Building Code Coverage |
|---|---|---|
| IBC | ICC-ES<br>IAPMO UES | International Building Code (IBC)<br>International Residential Code (IRC) |
| FL | Florida<br>Statewide Product Approval | Florida Building Code<br>Visit **strongtie.com/codes** or **floridabuilding.org** for accurate and up-to-date product approval and evaluation reports. |
| LA | City of Los Angeles<br>Department of Building Safety | Los Angeles Building Code and Los Angeles Residential Code<br>These products may have either a City of LA Research Report or a City of LA supplement to their ICC-ES or IAPMO UES evaluation reports. |
| PR | Prescriptive | Products that meet prescriptive or conventional construction requirements. |
| — | None | No evaluation report listing. |

C-CF-2020 ©2020 SIMPSON STRONG-TIE COMPANY INC.

# General Notes

**These notes are provided to ensure proper installation of Simpson Strong-Tie® products and must be followed fully.**

a. Simpson Strong-Tie Company Inc. reserves the right to change specifications, designs and models without notice or liability for such changes.

b. Steel used for each Simpson Strong-Tie product is individually selected based on the product's steel specifications, including strength, thickness, formability, finish, and weldability. Contact Simpson Strong-Tie for steel information on specific products.

c. Unless otherwise noted, dimensions are in inches and loads are in pounds.

d. Unless otherwise noted, welds, bolts, screws and nails may not be combined to achieve highest load value.

e. Unless otherwise noted, catalog loads are based on cold-formed steel members having a minimum yield strength, $F_y$, of 33 ksi and tensile strength, $F_u$, of 45 ksi for 43 mil (18 ga.) and thinner, and a minimum yield strength, $F_y$, of 50 ksi and tensile strength, $F_u$, of 65 ksi for 54 mil (16 ga.) and thicker.

f. Simpson Strong-Tie Company Inc. will manufacture non-catalog products provided prior approval is obtained and an engineering drawing is included with the order. Steel specified on the drawings as ⅛", 3⁄16", and ¼" will be 11 gauge (0.120"), 7 gauge (0.179"), and 3 gauge (0.239"), respectively. The minimum yield and tensile strengths are 33 ksi and 52 ksi, respectively.

g. All references to bolts or machine bolts (MBs) are for structural quality through bolts (not lag screws or carriage bolts) equal to or better than ASTM Standard A307, Grade A.

h. Unless otherwise noted, bending steel in the field may cause fractures at the bend line. Fractured steel will not carry load and must be replaced.

i. Top flange hangers may cause unevenness. Possible remedies should be evaluated by a professional and include using a face mount hanger or cutting the subfloor to accommodate the top flange thickness.

j. Built-up members (multiple members) must be fastened together to act as one unit to resist the applied load (excluding the connector fasteners). This must be determined by the designer or Engineer of Record.

k. Do not overload. Do not exceed catalog allowable loads, which would jeopardize the connection.

l. Some model configurations may differ from those shown in this catalog. Contact Simpson Strong-Tie for details.

m. Some combinations of hanger options are not available. In some cases, combinations of these options may not be installable. Horizontal loads induced by sloped joists must be resisted by other members in the structural system. A qualified designer must always evaluate each connection, including carried and carrying member limitations, before specifying the product. Fill all fastener holes with fastener types specified in the tables, unless otherwise noted. Hanger configurations, height and fastener schedules may vary from the tables depending on joist size, skew and slope. See the allowable table load for the non-modified hanger, and adjust as indicated. Material thickness may vary from that specified depending on the manufacturing process used. W hangers normally have single stirrups; occasionally, the seat may be welded. S/B, S/LBV, W and WP hangers for sloped seat installations are assumed backed.

n. Simpson Strong-Tie will calculate the net height for a sloped seat. The customer must provide the H1 joist height before slope.

o. Do not weld products listed in this catalog unless this publication specifically identifies a product as acceptable for welding, or unless specific approval for welding is provided in writing by Simpson Strong-Tie. Some steels have poor weldability and a tendency to crack when welded. Cracked steel will not carry load and must be replaced.

p. Steel for the framing members must comply with ASTM A1003 Grade 33 minimum. Reference General Note "e" for additional requirements.

q. Consideration should be given to the screw head specified as this may affect the attached materials.

r. Do not add fastener holes or otherwise modify Simpson Strong-Tie products. The performance of modified products may be substantially weakened. Simpson Strong-Tie will not warrant or guarantee the performance of such modified products.

C-CF-2020 ©2020 SIMPSON STRONG-TIE COMPANY INC.

# Warning

Simpson Strong-Tie Company Inc. structural connectors, anchors, and other products are designed and tested to provide specified design loads. To obtain optimal performance from Simpson Strong-Tie Company Inc. products and achieve maximal allowable design load, the products must be properly installed and used in accordance with the installation instructions and design limits provided by Simpson Strong-Tie Company Inc. To ensure proper installation and use, designers and installers must carefully read the following General Notes, General Instructions to the Installer and General Instructions to the Designer, as well as consult the applicable catalog pages for specific product installation instructions and notes.

Proper product installation requires careful attention to all notes and instructions, including these basic rules:

1. Be familiar with the application and correct use of the connector.
2. Follow all installation instructions provided in the applicable catalog, website, *Installer's Pocket Guide* or any other Simpson Strong-Tie publications.
3. Install all required fasteners per installation instructions provided by Simpson Strong-Tie Company Inc.: (a) use proper fastener type; (b) use proper fastener quantity; (c) fill all fastener holes; (d) do not overdrive or underdrive nails, including when using powder nailers; and (e) ensure screws are completely driven.
4. Only bend products that are specifically designed to be bent. For those products that require bending (such as strap-type holdowns, straight-end twist straps, etc.), do not bend more than one full cycle.
5. Cut joists to the correct length, do not "short-cut." The gap between the end of the joist and the header material should be no greater than ⅛" unless otherwise noted.

Failure to follow all of the notes and instructions provided by Simpson Strong-Tie Company Inc. may result in improper installation of products. Improperly installed products may not perform to the specifications set forth in this catalog and may reduce a structure's ability to resist the movement, stress and loading that occurs from gravity loads as well as impact events such as earthquakes and high-velocity winds.

Simpson Strong-Tie Company Inc. does not guarantee the performance or safety of products that are modified, improperly installed or not used in accordance with the design and load limits set forth in this catalog.

### Important Information

In addition to following the basic rules provided above as well as all notes, warnings and instructions provided in the catalog, installers, designers, engineers and consumers should consult the Simpson Strong-Tie Company Inc. website at **strongtie.com** to obtain additional design and installation information.

# General Instructions to the Installer

**These general instructions to the installer are provided to ensure proper selection and installation of Simpson Strong-Tie products and must be followed carefully. These general instructions are in addition to the specific installation instructions and notes provided for each particular product, all of which should be consulted prior to and during installation of Simpson Strong-Tie products.**

a. All specified fasteners must be installed according to the instructions in this catalog. Incorrect fastener quantity, size, type, material, or finish may cause the connection to fail.

b. Holes for ½" diameter or greater bolts shall be no more than a maximum of 1⁄16" larger than bolt diameter per AISI S100 Table E3.

c. Install all specified fasteners before loading the connection.

d. Some hardened fasteners may have premature failure if exposed to moisture. The fasteners are recommended to be used in dry interior applications.

e. Use proper safety equipment.

f. When installing a joist into a connector with a seat, the joist shall bear completely on the seat. The gap between the end of the joist and the connector or header shall not exceed ⅛" per ICC-ES AC 261 and ASTM D1761 test standards, unless otherwise noted.

g. For holdowns, anchor bolt nuts should be finger-tight plus ⅓ to ½ turn with a hand wrench. Care should be taken to not over-torque the nut and impact wrenches should not be used. This may preload the holdown.

h. Holdowns and tension ties may be raised off the track as dictated by field conditions to accommodate an anchor mislocated no more than 1½". The holdown shall be raised off the bottom track at least 3" for every ¼" that the anchor is offset from the model's centerline. Anchor bolt slope shall be no greater than 1:12 (or 5 degrees). Contact the designer if the holdown anchor is offset more than 1½" or raised more than 18". Raised holdown height is measured from the top of the concrete to the top of the holdown bearing plate.

i. All screws shall be installed in accordance with the screw manufacturer's recommendations. All screws shall penetrate and protrude through the attached materials a minimum of three full exposed threads per AISI S200 General Provisions Section D1.3.

j. Welding galvanized steel may produce harmful fumes; follow proper welding procedures and safety precautions. Welding should be in accordance with American Welding Society (AWS) standards. Unless otherwise noted, Simpson Strong-Tie connectors cannot be welded.

k. Temporary lateral support for members may be required during installation.

C-CF-2020 ©2020 SIMPSON STRONG-TIE COMPANY INC.

# General Instructions to the Designer

**These general instructions to the designer are provided to ensure proper selection and installation of Simpson Strong-Tie Company Inc. products and must be followed carefully. These general instructions are in addition to the specific design and installation instructions and notes provided for each particular product, all of which should be consulted prior to and during the design process.**

a. Allowable loads are determined per the AISI S100 unless otherwise specified. Other code agencies may use different methodologies.

b. The allowable load is typically limited to an average test load at ⅛" deflection, or an average or lowest test value (nominal load) divided by a safety factor or the calculation value. The safety factor is prescribed by Section F1 of the AISI S100.

c. To achieve the loads shown in this catalog, the designer must verify that the self-drilling screws used for connector installation have $P_{SS}/\Omega$ and $P_{ts}/\Omega$ values greater than or equal to the values given in the table, Minimum ASD Loads for Screws (lb.), per p. 20 of this catalog.

d. Allowable simultaneous loads in more than one direction on a single connector must be evaluated as follows:

Design Uplift/Allowable Uplift + Design Lateral Parallel to Track/ Allowable Lateral Parallel to Track + Design Lateral Perpendicular to Track/Allowable Lateral Perpendicular to Track ≤ 1.0.

The three terms in the unity equation are due to the three possible directions that exist to generate force on a connector. The number of terms that must be considered for simultaneous loading is at the sole discretion of the designer and is dependent on their method of calculating wind forces and the utilization of the connector within the structural system.

e. The term "designer" used throughout this catalog is intended to mean a licensed/certified building design professional, a licensed professional engineer, or a licensed architect.

f. All connected members and related elements shall be designed by the designer.

g. Unless otherwise noted, member strength is not considered in the loads given and, therefore, one should reduce allowable loads when member strength is limiting.

h. The average ultimate breaking strength for some models is listed under "nominal tension load."

i. Simpson Strong-Tie strongly recommends the following addition to construction drawings and specifications: "Simpson Strong-Tie connectors and fasteners are specifically required to meet the structural calculations of plan. Before substituting another brand, confirm load capacity based on reliable published testing data or calculations. The designer or Engineer of Record should evaluate and give written approval for substitution prior to installation."

j. Verify that the dimensions of the supporting member are sufficient to receive the specified fasteners, and develop the top flange bearing length.

k. Simpson Strong-Tie will provide, upon request, code testing data on all products that have been code tested.

l. Most of the allowable loads published in this catalog are for use when utilizing the traditional Allowable Stress Design (ASD) methodology. A method for using Load and Resistance Factor Design (LRFD) for cold-formed steel is also included in AISI S100. When designing with LRFD, the nominal connector strength multiplied by the resistance factor must be used. If not listed or noted in a table footnote, contact Simpson Strong-Tie for the LRFD values of products listed in this catalog.

m. All steel-to-steel connector screws must comply with ASTM C1513.

n. Screw strength shall be calculated in accordance to AISI S100 Section E4 or shall be based upon the manufacturer's design capacity determined from testing.

o. Simpson Strong-Tie recommends that hanger height be at least 60% of joist height for stability against rotation while under construction prior to sheathing install.

p. Local and/or regional building codes may require meeting special conditions. Building codes often require special inspection of anchors installed in concrete and masonry. For compliance with these requirements, it is necessary to contact the local and/or regional building authority. Except where mandated by code, Simpson Strong-Tie products do not require special inspection.

q. When connectors are attached to two CFS members of different thicknesses, the designer shall use the thinner of the two members for selecting allowable loads.

# Additional Instructions for the Installer for Hybrid (Steel-to-Wood) Connections

a. Bolt holes into wood members shall be at least a minimum of 1/32" and no more than a maximum of 1/16" larger than the bolt diameter (per the 2015 NDS 12.1.3.2 and AISI S100 Table E3a, if applicable).

b. Joist shall bear completely on the connector seat, and the gap between the joist end and the header shall not exceed ⅛" per ICC-ES AC261, ASTM D1761 and ASTM D7147 test standards (unless specifically noted otherwise).

c. For holdowns, anchor bolt nuts should be finger-tight plus ⅓ to ½ turn with a hand wrench, with consideration given to possible future wood shrinkage. Care should be taken to not over-torque the nut and impact wrenches should not be used. This may preload the holdown.

C-CF-2020 ©2020 SIMPSON STRONG-TIE COMPANY INC.

# Additional Important Information and General Notes for Hybrid (Steel-to-Wood) Connections

**These notes are in addition to the previous notes for steel-to-steel connections and are provided to ensure proper installation of Simpson Strong-Tie® products and must be followed fully.**

a. Unless otherwise noted, allowable loads are for Douglas Fir-Larch under continuously dry conditions. Allowable loads for other species or conditions must be adjusted according to the code. The section from the AC13 criteria indicating the range of specific gravity reads as follows: 3.2.3 The species of lumber used shall have a specific gravity not greater than 0.55 as determined in accordance with the NDS. This chart shows specific gravity and perpendicular to grain compression capacities for the different wood species:

| Species | Fc⊥ | Specific Gravity |
|---|---|---|
| Douglas Fir-Larch (DFL) | 625 psi | 0.50 |
| Southern Pine (SP) | 565 psi | 0.55 |
| Spruce-Pine-Fir (SPF) | 425 psi | 0.42 |
| Spruce-Pine-Fir South (SPF-S) | 335 psi | 0.36 |
| Hem Fir (HF) | 405 psi | 0.43 |
| Glulam | 650 psi | 0.50 |
| LVL (DF/SP) | 750 psi | 0.50 |
| LSL ($E = 1.3 \times 10^6$) | 680 psi | 0.50 |
| LSL ($E \geq 1.5 \times 10^6$) | 880 psi | 0.50 |
| Parallam® PSL | 750 psi | 0.50 |

b. For face-mount hangers and straight straps, use 0.86 of Douglas-Fir table loads for Spruce-Pine-Fir.

c. A fastener that splits the wood will not take the design load. Evaluate splits to determine if the connection will perform as required. Dry wood may split more easily and should be evaluated as required. If wood tends to split, consider pre-boring holes with diameters not exceeding 0.75 of the nail diameter (2015/2018 NDS 12.1.5.3).

d. Wood shrinks and expands as it loses and gains moisture, particularly perpendicular to its grain. Take wood shrinkage into account when designing and installing connections. Simpson Strong-Tie manufactures products to fit common dry lumber dimensions. If you need a connector with dimensions other than those listed in this catalog, Simpson Strong-Tie may be able to vary connector dimensions; contact Simpson Strong-Tie. The effects of wood shrinkage are increased in multiple lumber connections, such as floor-to-floor installations. This may result in the vertical rod nuts becoming loose, requiring post-installation tightening. (Reference ICC-ES ESR-2320 for information on Take-up Devices.)

e. Top flange hangers may cause unevenness. Possible remedies should be evaluated by a professional and include using a face mount hanger, and notching the beam or cutting the subfloor to accommodate the top flange thickness.

f. Built-up lumber (multiple members) must be fastened together to act as one unit to resist the applied load (excluding the connector fasteners). This must be determined by the designer.

# Additional Instructions for the Designer for Hybrid (Steel-to-Wood) Connections

a. Loads are based on the AISI S100 and the 2015 AF National Design Specifications (NDS), unless otherwise specified. Other code agencies may use different methodologies.

Duration of load adjustments for fasteners into wood as specified by the code are as follows:

Do not alter installation procedures from those set forth in this catalog.
"FLOOR" and "DOWN" (100) — no increase for duration of load.
"SNOW" (115) — 115% of design load for 2-month duration of load.
"ROOF LOAD" (125) — 125% of design load for 7-day duration of load.
"EARTHQUAKE/WIND" (160) — 160% of design load for earthquake/wind loading.

b. Some catalog illustrations show connections that could cause cross-grain tension or bending of the wood during loading if not sufficiently reinforced. In this case, mechanical reinforcement should be considered.

c. Most of the allowable loads published in this catalog are for use when utilizing the traditional Allowable Stress Design (ASD) methodology. A method for using Load and Resistance Factor Design (LRFD) for cold-formed steel is also included in AISI S100. When designing with LRFD, the nominal connector strength multiplied by the resistance factor must be used. If not listed or noted in a table footnote, contact Simpson Strong-Tie for the LRFD values of products listed in this catalog. A method for using Load and Resistance Factor Design (LRFD) for wood has been published in ASTM D5457. For more information, refer to the 2015 NDS Appendix N, which contains a conversion procedure that can be used to derive LRFD capacities. When designing with LRFD, reference lateral resistances must be used.

d. Pneumatic or powder-actuated fasteners may deflect and injure the operator or others. Unless otherwise noted, powder-actuated fasteners should not be used to install connectors. Pneumatic nail tools may be used to install connectors, provided the correct quantity and type of fasteners are properly installed in the fastener holes. Tools with fastener hole-locating mechanisms should be used. Follow the manufacturer's instructions and use the appropriate safety equipment. Over driving fasteners may reduce allowable loads. Contact Simpson Strong-Tie as needed.

C-CF-2020 ©2020 SIMPSON STRONG-TIE COMPANY INC.

# Important Information and General Notes

SIMPSON Strong-Tie®

## Limited Warranty

Simpson Strong-Tie Company Inc. warrants catalog products to be free from defects in material or manufacturing. Simpson Strong-Tie Company Inc. products are further warranted for adequacy of design when used in accordance with design limits in this catalog and when properly specified, installed and maintained. This warranty does not apply to uses not in compliance with specific applications and installations set forth in this catalog, or to non-catalog or modified products, or to deterioration due to environmental conditions.

Simpson Strong-Tie® connectors are designed to enable structures to resist the movement, stress and loading that results from impact events such as earthquakes and high-velocity winds. Other Simpson Strong-Tie products are designed to the load capacities and uses listed in this catalog. Properly-installed Simpson Strong-Tie products will perform in accordance with the specifications set forth in the applicable Simpson Strong-Tie catalog. Additional performance limitations for specific products may be listed on the applicable catalog pages.

Due to the particular characteristics of potential impact events, the specific design and location of the structure, the building materials used, the quality of construction, and the condition of the soils involved, damage may nonetheless result to a structure and its contents even if the loads resulting from the impact event do not exceed Simpson Strong-Tie catalog specifications and Simpson Strong-Tie connectors are properly installed in accordance with applicable building codes.

All warranty obligations of Simpson Strong-Tie Company Inc. shall be limited, at the discretion of Simpson Strong-Tie Company Inc., to repair or replacement of the defective part. These remedies shall constitute Simpson Strong-Tie Company Inc.'s sole obligation and sole remedy of purchaser under this warranty. In no event will Simpson Strong-Tie Company Inc. be responsible for incidental, consequential, or special loss or damage, however caused.

**This warranty is expressly in lieu of all other warranties, expressed or implied, including warranties of merchantability or fitness for a particular purpose, all such other warranties being hereby expressly excluded. This warranty may change periodically — consult our website strongtie.com for current information.**

## Terms and Conditions of Sale

### Product Use

Products in this catalog are designed and manufactured for the specific purposes shown, and should not be used with other connectors not approved by a qualified designer. Modifications to products or changes in installations should only be made by a qualified designer. The performance of such modified products or altered installations is the sole responsibility of the designer.

### Indemnity

Customers or designers modifying products or installations, or designing non-catalog products for fabrication by Simpson Strong-Tie Company Inc. shall, regardless of specific instructions to the user, indemnify, defend and hold harmless Simpson Strong-Tie Company Inc. for any and all claimed loss or damage occasioned in whole or in part by non-catalog or modified products.

### Non-Catalog and Modified Products

Consult Simpson Strong-Tie Company Inc. for applications for which there is no catalog product, or for connectors for use in hostile environments, with excessive wood shrinkage, or with abnormal loading or erection requirements.

Non-catalog products must be designed by the customer and will be fabricated by Simpson Strong-Tie in accordance with customer specifications.

Simpson Strong-Tie cannot and does not make any representations regarding the suitability of use or load-carrying capacities of non-catalog products. Simpson Strong-Tie provides no warranty, express or implied, on non-catalog products. F.O.B. Shipping Point unless otherwise specified.

## Conversion Charts

### Metric Conversion

| Imperial | Metric |
|---|---|
| 1 in. | 25.40 mm |
| 1 ft. | 0.3048 m |
| 1 lb. | 4.448N |
| 1 Kip | 4.448 kN |
| 1 psi | 6,895 Pa |

### Bolt Diameter

| in. | mm |
|---|---|
| ⅜ | 9.5 |
| ½ | 12.7 |
| ⅝ | 15.9 |
| ¾ | 19.1 |
| ⅞ | 22.2 |
| 1 | 25.4 |

### If Common Rafter Roof Pitch is... / Then Hip/Valley Rafter Roof Pitch becomes...

| Rise/Run | Slope | Rise/Run | Slope |
|---|---|---|---|
| 1/12 | 5° | 1/17 | 3° |
| 2/12 | 10° | 2/17 | 7° |
| 3/12 | 14° | 3/17 | 10° |
| 4/12 | 18° | 4/17 | 13° |
| 5/12 | 23° | 5/17 | 16° |
| 6/12 | 27° | 6/17 | 19° |
| 7/12 | 30° | 7/17 | 22° |
| 8/12 | 34° | 8/17 | 25° |
| 9/12 | 37° | 9/17 | 28° |
| 10/12 | 40° | 10/17 | 30° |
| 11/12 | 42° | 11/17 | 33° |
| 12/12 | 45° | 12/17 | 35° |

Use these Roof Pitch to Hip/Valley Rafter Roof Pitch conversion tables only for hip/valley rafters that are skewed 45° right or left. All other skews will cause the slope to change from that listed.

### US Standard Steel Gauge Equivalents in Nominal Dimensions

| Min. Thick. | Design Thick. | Ref. Ga.[2] | Thickness of Steel Sheets (in.) | | |
|---|---|---|---|---|---|
| mil | in. | | Uncoated Steel | Galvanized Steel (G90) | ZMAX® (G185) |
| 229 | 0.2405 | 3 | 0.239 | — | — |
| 171 | 0.1795 | 7 | 0.179 | 0.186 | — |
| 118 | 0.1240 | 10 | 0.134 | 0.138 | 0.140 |
| 111 | 0.1163 | 11 | 0.120 | 0.123 | 0.125 |
| 97 | 0.1017 | 12 | 0.105 | 0.108 | 0.110 |
| 68 | 0.0713 | 14 | 0.075 | 0.078 | 0.080 |
| 54 | 0.0566 | 16 | 0.060 | 0.063 | 0.065 |
| 43 | 0.0451 | 18 | 0.048 | 0.052 | 0.054 |
| 33 | 0.0346 | 20 | 0.036 | 0.040 | 0.042 |
| 27 | 0.0283 | 22 | 0.030 | 0.033 | 0.035 |

1. Steel thickness may vary according to industry mill standards.
2. Gauge numbers shown are for reference only.

C-CF-2020 ©2020 SIMPSON STRONG-TIE COMPANY INC.

# **Corrosion** Information

## Understanding the Corrosion Issue

Metal connectors, fasteners and anchors can corrode and lose carrying capacity when installed in corrosive environments or when installed in contact with corrosive materials. The many variables present in a building environment make it impossible to predict accurately whether, or when, corrosion will begin to reach a critical level. This relative uncertainty makes it crucial that specifiers and users be knowledgeable about the potential risks and select a product suitable for the intended use. When there is any uncertainty about the possible corrosion risks of any installation, a qualified professional should be consulted. Because of the risks posed by corrosion, periodic inspections should be performed by a qualified engineer or qualified inspector and maintenance performed accordingly.

It's common to see some corrosion in outdoor applications. Even stainless steel can corrode. The presence of some corrosion does not mean that load capacity has been affected or that failure is imminent. If significant corrosion is apparent or suspected, then the wood, fasteners, anchors, and connectors should be inspected by a qualified engineer or qualified inspector. Replacement of affected components may be appropriate.

Because of the many variables involved, Simpson Strong-Tie cannot provide estimates of the service life of connectors, anchors, and fasteners. We suggest that all users and specifiers obtain recommendations on corrosion from the suppliers of the materials that will be used with Simpson Strong-Tie products, in particular, treated wood or concrete. We have attempted to provide basic knowledge on the subject here, and have additional information in our technical bulletins on the topic (**strongtie.com/info**). The Simpson Strong-Tie website should always be consulted for the latest information.

## Corrosion Conditions

Corrosion can result from many combinations of environmental conditions, materials, construction design, and other factors, and no single guideline addresses all corrosion possibilities. Nevertheless, important corrosion information can be obtained from the American Wood Protection Association (AWPA), the International Building Code (IBC), International Residential Code (IRC), and local building codes. The following discussion provides general guidelines and approaches for the selection of Simpson Strong-Tie products for various construction conditions, but is not intended to supersede the guidelines of the AWPA, IBC, IRC, or local building codes.

Corrosion issues for Simpson Strong-Tie products generally fall into four categories:

### 1. Environmental and Construction Factors

Many environments and materials can cause corrosion, including ocean salt air, condensation, duration of wetness, fire retardants, fumes, fertilizers, chlorides, sulfates, preservative-treated wood, de-icing salts, dissimilar metals, soils, and more. designers must take all of these factors into account when deciding which Simpson Strong-Tie products to use with which corrosion-resistant coatings or materials.

The design, quality of construction, and misinstallation can directly affect the corrosion resistance of products. A product intended and installed for use in dry-service environment may corrode if the structure design or building materials allow moisture intrusion, or expose the product to corrosive conditions, such as moisture or chemicals contained in the construction materials, soils, or atmospheres.

### 2. Chemically-Treated Lumber

Some wood-preservative or fire-retardant chemicals or chemical retention levels create increased risk of corrosion and are corrosive to steel connectors and fasteners. For example, testing by Simpson Strong-Tie has shown that ACQ-Type D is more corrosive than Copper Azole, Micronized Copper Azole, or CCA-C. At the same time, other tests have shown that inorganic boron treatment chemicals, specifically SBX-DOT, are less corrosive than CCA-C.

Because different chemical treatments of wood have different corrosion effects, it's important to understand the relationship between the wood treatment chemicals and the coatings and base metals of Simpson Strong-Tie products.

The preservative-treated wood supplier should provide all of the pertinent information about the treated wood product. The information should include the AWPA Use Category Designation, wood species group, wood treatment chemical, and chemical retention. See building code requirements and appropriate evaluation reports for corrosion effects of wood treatment chemicals and for fastener corrosion resistance recommendations.

With Fire-Retardant-Treated (FRT) Wood, the 2015 and 2018 IBC Section 2304.10.5.4 and 2015 and 2018 IRC Section R317.3.4 refer to the manufacturers' recommendations for fastener corrosion requirements. In the absence of recommendations from the FRT manufacturer, the building codes require fasteners to be hot-dip galvanized, stainless steel, silicon bronze or copper. Simpson Strong-Tie further requires that the fastener is compatible with the metal connector hardware. Fastener shear and withdrawal allowable loads may be reduced in FRT lumber. Refer to the FRT manufacturer's evaluation report for potential reduction factors.

### 3. Dissimilar Metals and Galvanic Corrosion

Galvanic corrosion occurs when two electrochemically dissimilar metals contact each other in the presence of an electrolyte (such as water) that acts as a conductive path for metal ions to move from the more anodic to the more cathodic metal. Good detailing practice, including the following, can help reduce the possibility of galvanic corrosion of fasteners and connectors:

- Use fasteners or anchors and connectors with similar electrochemical properties
- Use insulating materials to separate dissimilar metals
- Ensure that the fastener or anchor is the cathode when dissimilar connector metals are present
- Prevent exposure to and pooling of electrolytes

### Galvanic Series of Metals

| Corroded End (Anode) |
|---|
| Magnesium, Magnesium alloys, Zinc |
| Aluminum 1100, Cadmium, Aluminum 2024-T4, Iron and Steel |
| Lead, Tin, Nickel (active), Inconel Ni-Cr alloy (active), Hastelloy alloy C (active) |
| Brasses, Copper, Cu-Ni alloys, Monel |
| Nickel (passive) |
| 304 stainless steel (passive), 316 stainless steel (passive), Hasteloy alloy C (passive) |
| Silver, Titanium, Graphite, Gold, Platinum |
| Protected End (Cathode) |

If you are uncertain about the galvanic corrosion potential of any installation, always consult with a corrosion expert. See the product pages for particular parts for more information regarding what coating systems are recommended or required for use with the parts in question.

### 4. Hydrogen-Assisted Stress Corrosion Cracking

Some hardened fasteners may experience premature failure from hydrogen-assisted stress-corrosion cracking if exposed to moisture. These fasteners are recommended for use only in dry-service conditions.

C-CF-2020 ©2020 SIMPSON STRONG-TIE COMPANY INC.

# Guidelines for Selecting Materials and Coatings

In the discussion and charts of this section, Simpson Strong-Tie presents a system to determine which product coatings and base metals to use in a range of corrosion conditions. These are general guidelines that may not consider all relevant application criteria. Refer to product-specific information for additional guidance.

Simpson Strong-Tie evaluated the AWPA Use Categories (See AWPA U1-16) and ICC-ES AC257 Exposure Conditions and developed a set of corrosion resistance recommendations. These recommendations address the coating systems and materials used by Simpson Strong-Tie for fastener, connector, and anchor products. Although the AWPA Use Categories and ICC-ES AC257 Exposure Conditions specifically address treated-wood applications and some common corrosion agents, Simpson Strong-Tie believes that its recommendations may be applied more generally to other application conditions, insofar as the service environments discussed are similar. You should consult with a corrosion engineer concerning the application where advisable.

## Step 1 — Evaluate the Corrosion Conditions

- **Dry Service:** Generally INTERIOR applications including wall and ceiling cavities, raised floor applications in enclosed buildings that have been designed to prevent condensation and exposure to other sources of moisture. Prolonged periods of wetness during construction should also be considered, as this may constitute a Wet Service or Elevated Service condition. Dry Service is typical of AWPA UC1 and UC2 for wood treatment and AC257 Exposure Condition 1. Keep in mind that dry-service environment may contain airborne salts. AC257 Exposure Condition 2 reflects the presence of airborne salt in a dry-service environment and corrosion hazard to exposed metal surfaces. It does not include effects of treatment chemicals. This condition is generally considered in Elevated and Uncertain assessments.
- **Wet Service:** Generally EXTERIOR construction in conditions other than elevated service. These include Exterior Protected and Exposed and General Use Ground Contact as described by AWPA UC4A. The AWPA U1 standard classifies exterior above-ground treatments as Use Categories UC3 (A and B) depending on moisture run-off; and for exterior ground-contact levels of protection, it has Use Categories UC4 (A-C). ICC-ES AC257 considers the exterior exposure to be limited by the presence of treatment chemicals, and corrosion accelerators. In general, the AC257 Exposure Condition 1 includes AWPA Use Categories UC1 (interior/dry) and UC2 (interior/damp), while Exposure Condition 3 is a surrogate to UC3A, 3B, and 4A (exterior, above-ground and ground-contact, general use). The ICC-ES AC257 Exposure Conditions 2 and 4 are exposures that are salt environments.
- **Elevated Service:** Includes fumes, fertilizers, soil, some preservative-treated wood (AWPA UC4B and UC4C), industrial-zone atmospheres, acid rain, salt air, and other corrosive elements.
- **Uncertain:** Unknown exposure, materials, or treatment chemicals.
- **Ocean/Water Front Service:** Marine environments that include airborne chlorides, salt air, and some salt splash. Environments with de-icing salts are included.

## Step 2 — Determine Your Corrosion Resistance Classification

### Corrosion Resistance Classifications

| Environment | Material to Be Fastened | | | | | | |
|---|---|---|---|---|---|---|---|
| | Untreated Wood or Other Material | Preservative-Treated Wood | | | | | FRT Wood |
| | | SBX-DOT Zinc Borate | Chemical Retention ≤ AWPA, UC4A | Chemical Retention > AWPA, UC4A | ACZA | Other or Uncertain | |
| Dry Service | Low | Low | Low | High | Medium | High | Medium |
| Wet Service | Medium | N/A | Medium | High | High | High | High |
| Elevated Service | High | N/A | Severe | Severe | High | Severe | N/A |
| Uncertain | High | High | High | Severe | High | Severe | Severe |
| Ocean/Water Front | Severe | N/A | Severe | Severe | Severe | Severe | N/A |

### Additional Considerations

1. Always consider the importance of the connection as well as the cost of maintenance and replacement.
2. If the information about treatment chemicals in an application is incomplete, or if there is any uncertainty as to the service environment of any application, Simpson Strong-Tie recommends the use of a Type 300 Series stainless steel. Simpson Strong-Tie has evaluated the corrosion effects of various formulations of wood treatment chemicals ACZA, ACQ, CCA, MCA, CA, and salt as corrosion accelerators. Simpson Strong-Tie has not evaluated all formulations and retentions of the named wood treatment chemicals other than to use coatings and materials in the severe category. Manufacturers may independently provide test results or other product information. Simpson Strong-Tie expresses no opinion regarding such information.
3. Type 316/305/304 stainless-steel products are recommended where preservative-treated wood used in ground contact has a chemical retention level greater than those for AWPA UC4A; CA-C, 0.15 pcf; CA-B, 0.21 pcf; micronized CA-C, 0.14 pcf; micronized CA-B, 0.15 pcf; ACQ-Type D (or C), 0.40 pcf. When wood treated with micronized CA-C and micronized CA-B with treatment retentions up to UC4B is in dry service, hot-dip galvanized fasteners and connectors may be suitable.
4. Mechanical galvanizations C3 and N2000 should not be used in conditions that would be more corrosive than AWPA UC3A (exterior, above ground, rapid water run off).
5. Some chemically treated wood may have chemical retentions greater than specification, particularly near the surface, making it potentially more corrosive than chemically treated wood with lower retentions. If this condition is suspected, use Type 316/305/304 stainless-steel, silicon bronze, or copper fasteners.
6. Some woods, such as cedars, redwood, and oak, contain water-soluble tannins and are susceptible to staining when in contact with metal connectors and fasteners. According to the California Redwood Association (**calredwood.org**), applying a quality finish to all surfaces of the wood prior to installation can help reduce staining.
7. Anchors, fasteners and connectors in contact with FRT lumber shall be hot-dip galvanized or stainless steel, unless recommended otherwise by the FRT manufacturer. Many FRT manufacturers permit low-corrosion-resistant connector and fastener coatings for dry-service conditions.
8. Simpson Strong-Tie does not recommend painting stainless-steel anchors, fasteners or connectors. Imperfections or damage to the paint can facilitate collection of dirt and water that can degrade or block the passive formation of the protective chromium oxide film. When this happens, crevice corrosion can initiate and eventually become visible as a brown stain or red rust. Painting usually does not improve the corrosion resistance of stainless steel.

C-CF-2020 ©2020 SIMPSON STRONG-TIE COMPANY INC.

# **Corrosion** Information

## Step 3 — Match Your Corrosion Resistance Classification to the Coatings and Materials Available

Not all products are available in all finishes. Contact Simpson Strong-Tie for product availability, ordering information and lead times.

## Coatings and Materials Available

| Level of Corrosion Resistance | Coating or Material | Description | |
|---|---|---|---|
| | | **Connectors** | **Fastener Material or Finish** |
| Low | **Gray Paint** | Organic paint intended to protect the product while it is warehoused and in transit to the jobsite. | Bright, Hot-Dip Galvanized, Mechanically Galvanized, or Double-Barrier Coating |
| | **Powder Coating** | Baked-on paint finish that is more durable than standard paint. | |
| | **Galvanized** | Standard (G90) zinc-galvanized coating containing 0.90 oz. of zinc per square foot of surface area (total both sides). | |
| Medium | ZMAX G185 | Galvanized (G185) 1.85 oz. of zinc per square foot of surface area (hot-dip galvanized per ASTM A653) total for both sides. Products with a powder-coat finish over a ZMAX® base have the same level of corrosion resistance. | Hot-Dip Galvanized, Mechanically Galvanized, or Double-Barrier Coating ** Bright fasteners may be used with ZMAX or HDG connectors where low corrosion resistance is allowed.* |
| | HDG HOT DIP GALVANIZED® | Products are hot-dip galvanized after fabrication (14 ga. and thicker). The coating weight increases with material thickness. The minimum average coating weight is 2.0 oz./ft.$^2$ (per ASTM A123) total for both sides. Anchor bolts are hot-dip galvanized per ASTM F2329. | |
| High/ Severe | 316 Stainless Steel **Type 316 Stainless Steel** | Type 316 stainless steel is a nickel-chromium austenitic grade of stainless steel with 2-3% molybdenum. Type 316 stainless steel is not hardened by heat treatment and is inherently nonmagnetic. It provides a level of corrosion protection suitable for severe environments, especially environments with chlorides. | Type 316 Stainless Steel |
| | | **Fasteners and Anchors** | **Applicable Products** |
| Low | **Bright** | No surface coating. | Nails |
| | **Electrocoating (E-Coat™)** | Electrocoating utilizes electrical current to deposit the coating material on the fastener. After application, the coating is cured in an oven. Electrocoating provides a minimum amount of corrosion protection and is recommended for dry, low-corrosive applications. | Strong-Drive® SDWF, SDW and SDWV screws |
| | **Clear and Bright Zinc, ASTM F1941** | Zinc coatings applied by electrogalvanizing processes to fasteners that are used in dry service and with no environmental or material corrosion hazard. | SD8 Wafer Head Screw<br>Strong-Drive FPHSD Screw<br>Strong-Drive X Metal Screw<br>XLSH Shoulder Screw |
| Medium | HDG HOT DIP GALVANIZED® **ASTM A153, Class D** | Hot-dip galvanized fasteners ⅜" and smaller in diameter in accordance with ASTM A153, Class D. Hot-dip galvanized fasteners are compliant with the 2015 and 2018 IRC and IBC. | Strong-Drive SCN Nail |
| | **Quik Guard® Coating** | Quik Guard coatings are proprietary coating systems that consist of an electroplated zinc base layer and organic top coats. The corrosion resistance is equivalent to hot-dip galvanization (ASTM A153, Class D) in some exposures and in most non-marine environments, and described by ICC-ES, AC257 Exposures 1 and 3. | Strong-Drive XL **LARGE-HEAD METAL** Screw |
| | **Type 410 Stainless Steel with Protective Top Coat** | Carbon martensitic grade of stainless steel that is inherently magnetic, with an added protective top coat. This material can be used in mild atmospheres and many mild chemical environments. | Titen® Stainless-Steel Concrete and Masonry Screw |
| | **Mechanically Galvanized Coating, ASTM B695, Class 55** | Simpson Strong-Tie® Strong-Drive SD Connector screws are manufactured with a mechanically applied zinc coating in accordance with ASTM B695, Class 55, with a supplemental overcoat. These fasteners are compatible with painted and zinc-coated (G90 and ZMAX) connectors and are recognized in evaluation reports that can be found on **strongtie.com**. | Strong-Drive SD **CONNECTOR** Screw |
| | **Double-Barrier Coating** | Simpson Strong-Tie Strong-Drive SDS Heavy-Duty Connector screws and Outdoor Accents® structural wood screws are manufactured with double-barrier coating that provides a level of corrosion protection equaling that provided by HDG coating and are recognized in evaluation reports that can be found on **strongtie.com**. | Strong-Drive SDS **CONNECTOR** Screw<br>Outdoor Accents Connector Screw and Structural Wood Screw |
| High/ Severe | HDG HOT DIP GALVANIZED® **ASTM A153, Class C** | Simpson Strong-Tie Strong-Drive Timber-Hex screws are hot-dip galvanized in accordance with ASTM A153, Class C. These hot-dip galvanized fasteners have a minimum average of 1.25 oz./ft.$^2$ of zinc coating and are compliant with the 2015 and 2018 IRC (R317.3) and IBC. | Strong-Drive **TIMBER-HEX HDG** Screw |
| | 316 Stainless Steel **Type 316 Stainless Steel** | Type 316 stainless steel is a nickel-chromium austenitic grade of stainless steel with 2-3% molybdenum. It provides a level of corrosion protection suitable for severe environments, especially environments with chlorides. Type 316 stainless-steel fasteners are compliant with the 2015 and 2018 IBC and IRC. | Strong-Drive SCNR Nail<br>Strong-Drive SDS **CONNECTOR** Screw |

### Dry Service

### Wet Service

### Elevated Service/Severe

C-CF-2020 ©2020 SIMPSON STRONG-TIE COMPANY INC.

# **Fastening** Information

SIMPSON Strong-Tie®

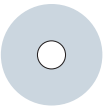

### Round Holes

**Purpose:**
To fasten a connector.

**Fill Requirements:**
Always fill, unless noted otherwise.

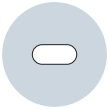

### Obround Holes

**Purpose:**
To make fastening a connector in a tight location easier.

**Fill Requirements:**
Always fill.

### Hexagonal Holes

**Purpose:**
To fasten a connector to concrete or masonry.

**Fill Requirements:**
Always fill when fastening a connector to concrete or masonry.

### Triangular Holes

**Purpose:**
To increase a connector's strength or to achieve max. strength.

**Fill Requirements:**
When the designer specifies max. nailing.

### Diamond Holes

**Purpose:**
To temporarily fasten a connector to make installing it easier.

**Fill Requirements:**
None.

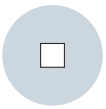

### Square Holes

**Purpose:**
To provide fastening option for unique custom designs

**Fill Requirements:**
Only when specified by designer.

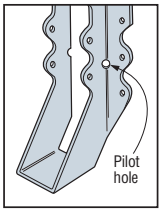


### Pilot Holes

Tooling holes for manufacturing purposes. No fasteners required.

To achieve the loads shown in this catalog, the designer must verify that the self-drilling screws used for connector installation have $P_{ss}/\Omega$ and $P_{ts}/\Omega$ values greater than or equal to the values tabulated in this table.

Hex head screws shown are required for connectors in this catalog. Where sheathing or finishes will be applied over the screws and low-profile heads are needed (such as with bracing connectors, hurricane ties and stud-plate ties), the designer is to ensure that the minimum screw head diameter complies with ASME B18.6.4.

## Minimum ASD Loads for Screws (lb.)

| Screw No. Designation | Nominal Diameter d (in.) | Washer Diameter $d_W$ (in.) | Allowable Screw Shear Strength ($P_{ss}/\Omega$) | Allowable Shear Connection Strength ($P_{ns}/\Omega$, $P_{ss}/\Omega$) Steel Thickness mil (ga.) | | | | | Allowable Screw Tension Strength ($P_{ts}/\Omega$) | Allowable Tensile Pull-Out Strength ($P_{not}/\Omega$, $P_{ts}/\Omega$) Steel Thickness mil (ga.) | | | | |
|---|---|---|---|---|---|---|---|---|---|---|---|---|---|---|
| | | | | 33–33 (20–20) | 43–43 (18–18) | 54–54 (16–16) | 68–68 (14–14) | 97–97 (12–12) | | 33 (20) | 43 (18) | 54 (16) | 68 (14) | 97 (12) |
| #8 | 0.164 | 0.318 | 470 | 165 | 245 | 470 | 470 | 470 | 630 | 70 | 95 | 170 | 215 | 305 |
| #10 | 0.190 | 0.375 | 540 | 175 | 265 | 535 | 540 | 540 | 820 | 85 | 110 | 200 | 250 | 355 |
| #12 | 0.216 | 0.375 | 840 | 190 | 280 | 570 | 805 | 840 | 845 | 95 | 125 | 225 | 285 | 405 |
| #14 | 0.242 | 0.500 | 1,045 | 200 | 295 | 605 | 850 | 1,045 | 1,220 | 105 | 140 | 250 | 320 | 455 |

1. Allowable loads are per AISI S-100 and are for use when utilizing the traditional Allowable Stress Design methodology. The tabulated loads may be multiplied by a Factor of Safety (Ω) of 3 to determine the screw nominal strength. The LRFD load may be determined by multiplying the nominal screw load by a Resistance Factor (ϕ) of 0.50.
2. Allowable loads may not be increased for wind or seismic load unless otherwise noted.
3. Allowable loads are based on cold-formed steel members with a minimum yield strength, $F_y$, of 33 ksi and tensile strength, $F_u$, of 45 ksi for 43 mil (18 ga.) and thinner, and a minimum yield strength of 50 ksi and tensile strength of 65 ksi for 54 mil (16 ga.) and thicker.
4. Allowable loads are based on design steel thickness for 33 mil = 0.0346", 43 mil = 0.0451", 54 mil = 0.0566", 68 mil = 0.0713", and 97 mil = 0.1017" per AISI S201 Product Data, Table B2-1.
5. Self-drilling tapping screw fasteners for steel-to-steel connections used for connectors in this catalog shall be in compliance with ASTM C1513.
6. Minimum required screw length is the greater of ¾" and the minimum length required for the screw to extend through the steel connection a minimum of (3) exposed threads per AISI S200-12 General Provisions Standard, Sect. D1.3.
7. Screw diameters per AISI S200-12 Commentary Table C-E4-1.
8. Size ¼"-diameter self-tapping screws may be substituted for #14 screws.

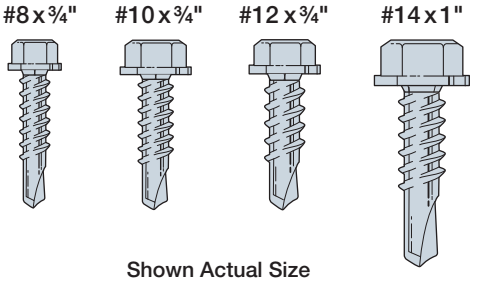


**Shown Actual Size**

See *Fastening Systems* catalog (C-F-2019) on **strongtie.com** for more information on Simpson Strong-Tie fasteners.

## Screw Suitability

| Screw Point Type | Screw Size | Maximum Material Thickness[1,2] (in.) | (mm) |
|---|---|---|---|
| #2 | #6 | 0.100 | 2.54 |
| | #8 | 0.100 | 2.54 |
| | #10 | 0.100 | 2.54 |
| #3 | #7 | 0.125 | 3.18 |
| | #8 | 0.140 | 3.56 |
| | #10 | 0.175 | 4.45 |
| | #12 | 0.210 | 5.33 |
| | #14 | 0.220 | 5.59 |
| #4 | #12 | 0.250 | 6.35 |
| | #14 | 0.250 | 6.35 |
| #5 | #12 | 0.500 | 12.70 |
| | #14 | 0.500 | 12.70 |

1. Total thickness of all steel, including any spacing between layers.
2. Drill and tap capacities may vary.
3. Table is guideline only; see individual product for specific maximum material thickness.

## CFS Framing Member

| Mil | Gauge | Design Thickness (in.) | (mm) | Minimum Thickness (in.) | (mm) |
|---|---|---|---|---|---|
| 18 | 25 | 0.0188 | 0.48 | 0.0179 | 0.45 |
| 27 | 22 | 0.0283 | 0.72 | 0.0269 | 0.68 |
| 30 | 20 (drywall) | 0.0312 | 0.79 | 0.0296 | 0.75 |
| 33 | 20 (structural) | 0.0346 | 0.88 | 0.0329 | 0.84 |
| 43 | 18 | 0.0451 | 1.14 | 0.0428 | 1.09 |
| 54 | 16 | 0.0566 | 1.44 | 0.0538 | 1.37 |
| 68 | 14 | 0.0713 | 1.81 | 0.0677 | 1.72 |
| 97 | 12 | 0.1017 | 2.58 | 0.0966 | 2.45 |

1. One "mil" is 1/1000 (0.001) of an inch. Mil thickness measures the uncoated base material.

C-CF-2020 ©2020 SIMPSON STRONG-TIE COMPANY INC.

# GET THERE QUICKER!

## Simpson Strong-Tie® **CFS Designer**™ Software

### New for 2020 — CFS Designer Version 3!

CFS Designer 3 now includes a module that empowers users to design multi-story x-brace and shearwalls per AISI S400-15/S1-16 and S240-15. With this powerful program engineers can design sheathed shearwalls or x-bracing up to eight stories in a matter of minutes. The design tool automates bookkeeping for transfer of all loads for all load combinations, as well as the ability to design in ASD or LRFD.

NEW

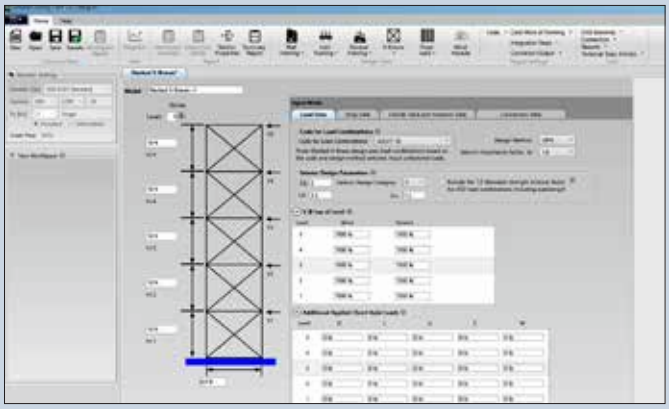

**Stacked x-braced module automates stacked x-brace design up to eight stories.**

### Other Key Additions and Enhancements:

- Addition of a knee-wall designer
- Wind load generator
- Connection designer for walls and openings
- Enhanced wall with opening interface
- Enhanced rafter framing interface
- Enhanced outputs

**Please visit strongtie.com/cfsdesigner to:**

- View complete system features
- Compare to LGBEAMER™ software
- Test drive the demo version
- View release notes
- Purchase and download CFS Designer™ software

### System Requirements

1. Microsoft Windows® 2003 or newer
2. Microsoft .NET Framework 4.0 Client Profile
3. Adobe Reader 9.0
4. Display Resolution 1280 x 768

**Wall stud design tool models up to 3-span wall studs with overhangs at each end.**

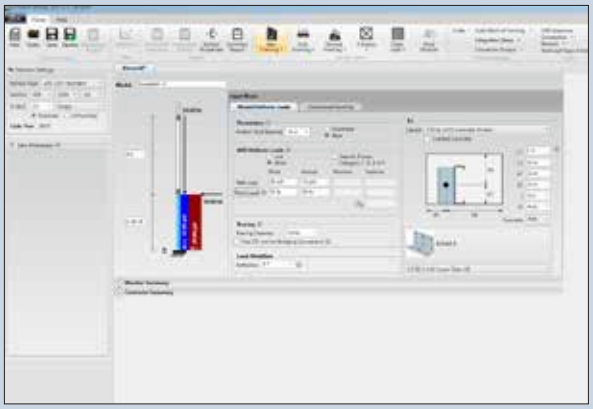

**Knee-wall design tool models exterior or interior low walls for wind and/or seismic including anchorage into cracked or uncracked concrete.**

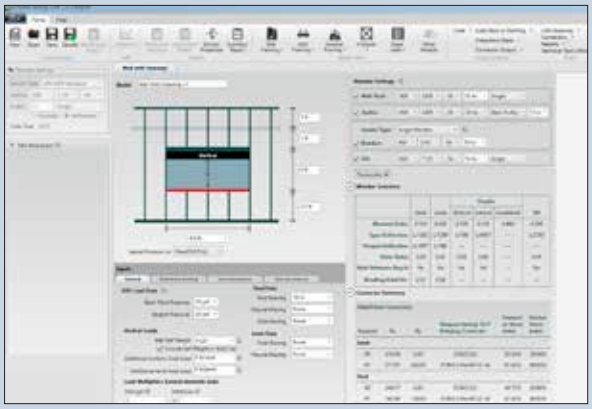

**Design automation tools for framed wall openings, stacked walls, floor joist, rafters, beam input, simple and stacked x-braced and shearwalls and wind module.**

C-CF-2020 ©2020 SIMPSON STRONG-TIE COMPANY INC.

# General Information and Notes for Curtain-Wall Framing Connectors

Slide-clip and fixed-clip curtain-wall framing connectors represent key components that comprise a continuous load path between curtain-wall steel-stud framing and primary building structure.

In light-frame cold-formed steel construction, primary building structures typically consist of structural steel or structural concrete base material. Hence, connectors for curtain-wall framing are designed to anchor to steel or concrete to resist tension and compression load, perpendicular to wall, due to wind pressure, shear load due to gravity weight of the CFS framing, and in-plane load, parallel to wall due to earthquake or high wind force.

## General Notes

1. Allowable loads are for use when utilizing the traditional Allowable Stress Design methodology. Contact Simpson Strong-Tie for LRFD loads unless otherwise noted.
2. Allowable loads may not be increased for wind or earthquake load.

Allowable loads are based on cold-formed steel members with a minimum yield strength, $F_y$, of 33 ksi and tensile strength, $F_u$, of 45 ksi for 43 mils (18 ga.) and thinner, and a minimum yield strength of 50 ksi and tensile strength of 65 ksi for 54 mils (16 ga.) and thicker. (U.O.N.)

3. Clips do not replace lateral or stability bracing. Design of bracing is the responsibility of the designer.
4. It is the responsibility of the Designer to verify the adequacy of the stud. Allowable loads are based on clips installed an adequate distance away from penetrations, notches, ends of studs and other conditions that may affect the clip performance.
5. It is the responsibility of the designer to check the adequacy of the supporting structure for loads imposed by connectors.
6. Industry studies show that hardened fasteners can experience performance problems in wet or corrosive environments. Accordingly, use these products in dry and non-corrosive environments only.

## Anchorage to Structural Steel

Anchor to structural steel using self-drilling screws, powder-actuated fasteners, or welding are based on installation in a minimum 3⁄16" thick structural steel with $F_y$ = 36 ksi. (U.O.N.)

1. Allowable loads for #12–24 self-drilling screws are based on a minimum nominal shear strength, $P_{ss}$, of 2,520 lb. and nominal tension strength, $P_{ts}$, of 2,535 lb. It is the responsible of the designer to select the proper length fasteners based on installation need. Screw length must ensure fastener extends through the connection a minimum of three exposed threads.
2. Allowable loads for Simpson Strong-Tie® PDPAT-62KP powder-actuated “tophat” fasteners also apply to alternate fasteners with a minimum shank 0.157", a minimum head diameter of 0.300", a minimum allowable shear of 410 lb. and tension strength of 260 lb. for A36 steel, and a minimum allowable shear of 420 lb. and tension strength of 305 lb. for A572 or A992 steel per ESR-2138. “Tophat” fasteners are recommended to ensure adequate clamping force and consistent installations.
3. Allowable loads for welded connections require E70XX electrodes with a minimum throat size equal to the clip thickness. Welding shall be in compliance with AWS D1.3. Welding galvanized steel may produce harmful fumes; follow proper welding procedures and precautions.

## Anchorage to Structural Concrete

Anchor to concrete or masonry such as Titen® 2 screws, Titen HD® screw anchor, Strong-Bolt® 2, or various type of epoxy for post installed are based on installation in concrete with a minimum $f'_c$ = 2,500 psi and a maximum $f'_c$ = 4,000 psi. Reference the current *Anchoring and Fastening Systems for Concrete and Masonry* catalog for more information.

1. Allowable loads for Simpson Strong-Tie Titen 2 concrete and masonry screws also apply to alternate fasteners with a ¼" diameter with hex head style, a minimum allowable shear of 300 lb. and tension strength of 415 lb. for concrete minimum $f'_c$ of 2,500. Titen 2 screws install easily in a predrilled hole and include a drill bit in each box.
2. Titen HD is a heavy-duty screw anchor for use in cracked and uncracked concrete as well as uncracked masonry. Titen HD is available in ¼", ⅜" and ½" diameter for anchorage used in curtain-wall framing connector.
3. Strong-Bolt 2 is a wedge-type expansion anchor designed for optimal performance in cracked and uncracked concrete as well as uncracked masonry. Strong-Bolt 2 is available in ¼", ⅜" and ½" diameter for anchorage.

C-CF-2020 ©2020 SIMPSON STRONG-TIE COMPANY INC.

# Innovative Solutions for Curtain-Wall Framing



Simpson Strong-Tie has developed a line of connectors for use with curtain-wall steel stud framing. Curtain-wall projects require a variety of connectors that provide a load path from the curtain wall to the primary structure for wind loads, seismic loads and dead loads. Slide-clip connectors enable the structural building frame to deflect independently of the curtain-wall system. Fixed-clip connectors support the dead load of a curtain wall from the structural frame. Fixed clips have the added benefit of providing connector solutions for load-bearing walls and for roof systems utilizing steel trusses and rafters.

Our connectors for curtain-wall construction accommodate many different bypass framing applications in a variety of stand-off conditions. We also offer connectors for head-of-wall and strut applications.

## Tailored to Your Design

Our standard slide clips accommodate either ¾" or 1" of both upward and downward movement, equivalent to an L/360 live-load deflection for a 30' span. Our standard clips also accommodate stand-offs as large as 25". For deflections greater than 1", or job-specific conditions, Simpson Strong-Tie can provide custom clips to suit most framing needs (see p. 117).

## Complete, Tested Solutions

Designers of curtain walls will often know the capacity of a connector, but since the capacity does not take into account the way in which the connector is anchored to the supporting structure, the designer must then manually calculate this important aspect of the connection design. These calculations are complicated by considerations of eccentric and prying forces that often exist but are difficult to predict. Through comprehensive testing Simpson Strong-Tie provides total, code-listed connector solutions. Our testing extends from the capacity of the connector and its attachment to the framing, to the anchorage of the connector to the primary structure. By providing complete data on the entire connection system, we save the designer time and ensure that all forces, including eccentric and prying forces, are adequately considered.

As with all Simpson Strong-Tie® products, our slide-clip and fixed-clip connectors for curtain-wall steel stud framing carry our promise of quality and performance, and are backed by prompt, knowledgeable service.

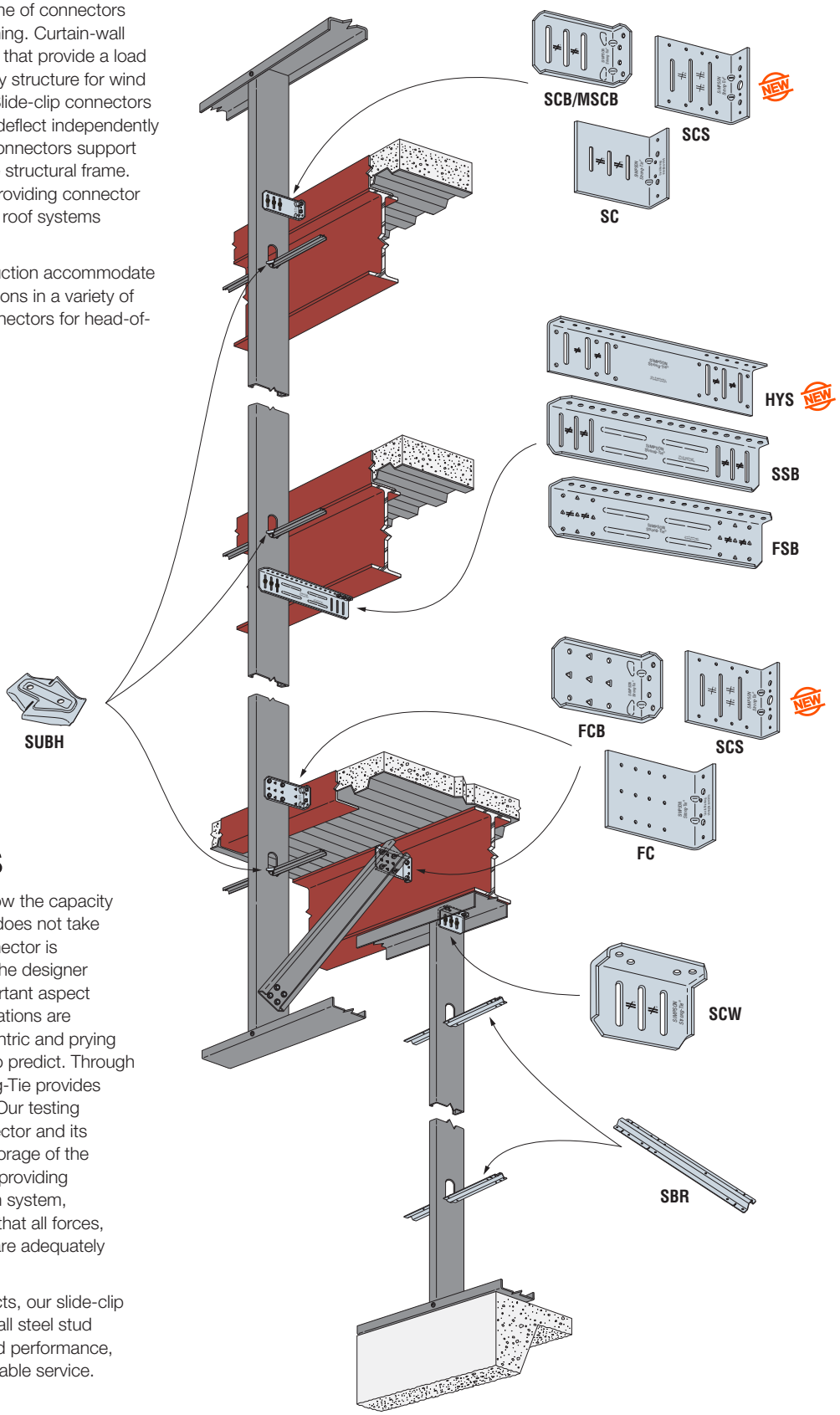


C-CF-2020 ©2020 SIMPSON STRONG-TIE COMPANY INC.

# Deflection Connectors

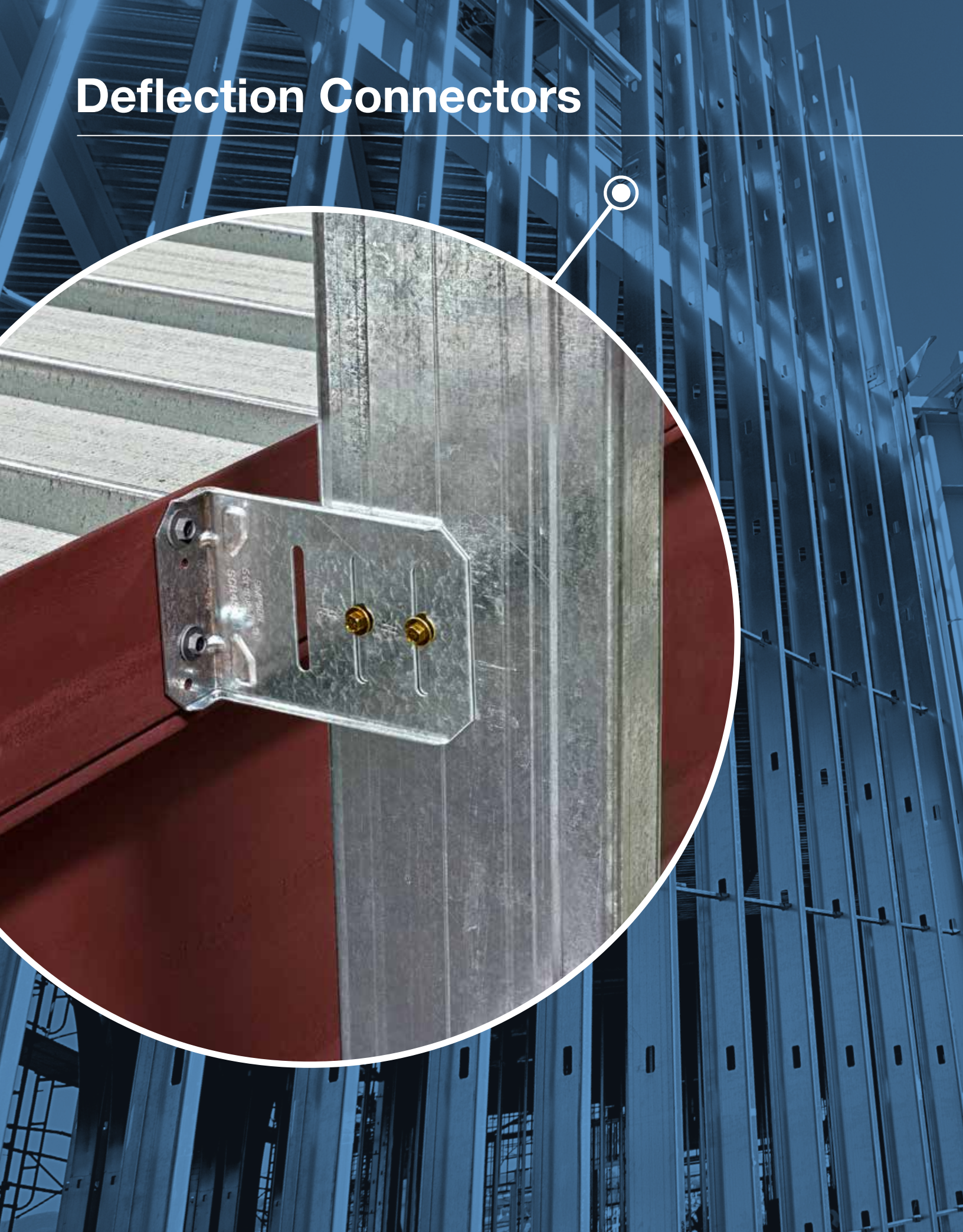

# **SCB/MSCB** Bypass Framing Slide-Clip Connector



***This product is preferable to similar connectors because of a) easier installation, b) higher loads, c) lower installed cost, or a combination of these features.***

The SCB/MSCB slide-clip connectors are high-performance connectors for bypass framing applications designed to reduce design time and overall installed cost. Various anchorage methods have been tested, and the resulting allowable loads eliminate the need to design connector anchorage. The SCB/MSCB can accommodate applications that typically require two parts with a single connector, reducing material and labor cost. These connectors are manufactured in five different lengths to accommodate a variety of stand-off conditions and steel-stud sizes.

**Features:**

- Provides a full 1" of both upward and downward movement
- The precision-manufactured shouldered screws provided with the SCB/MSCB connector are designed to prevent overdriving and to ensure the clip functions properly
- Strategically placed stiffeners, embossments and anchor holes maximize connector performance
- Simpson Strong-Tie® No-Equal stamps mark the center of the slots to help ensure correct shouldered-screw placement

**Material:** SCB — 54 mil (16 ga.); MSCB — 68 mil (14 ga.)

**Finish:** Galvanized (G90)

**Installation:**

- Use the specified type and number of anchors.
- Use the specified number of XLSH34B1414 #14 shouldered screws (included). Install shouldered screws in the slots adjacent to the No-Equal stamp.
- Use a maximum of one screw per slot.

**Codes:** See p. 11 for Code Reference Key Chart

**Ordering Information:**

SCB43.5-KT contains:

- 25 connectors
- (55) XLSH34B1414 #14 shouldered screws

SCB45.5-KT, MSCB45.5-KT, SCB47.5-KT, MSCB47.5-KT, SCB49.5-KT, and SCB411.5-KT contain:

- 25 connectors
- (83) XLSH34B1414 #14 shouldered screws

**Note:** Replacement #14 shouldered screws for SCB/MSCB connectors are XLSH34B1414-RP83

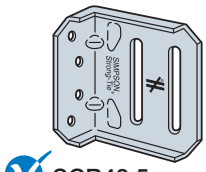

**SCB43.5**

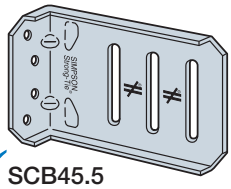

**SCB45.5**
*(MSCB45.5 similar)*

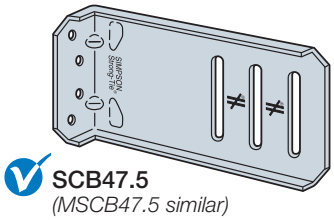

**SCB47.5**
*(MSCB47.5 similar)*

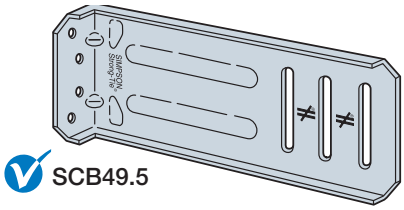

**SCB49.5**

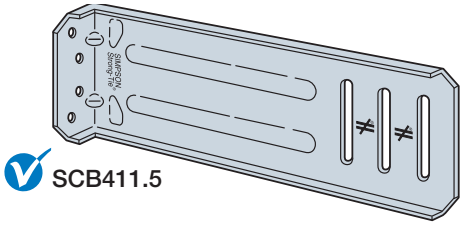

**SCB411.5**

US Patent 8,555,592

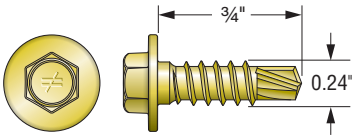


**XLSH34B1414**
**#14 Shouldered Screw for Attachment to Stud Framing**
*(included)*

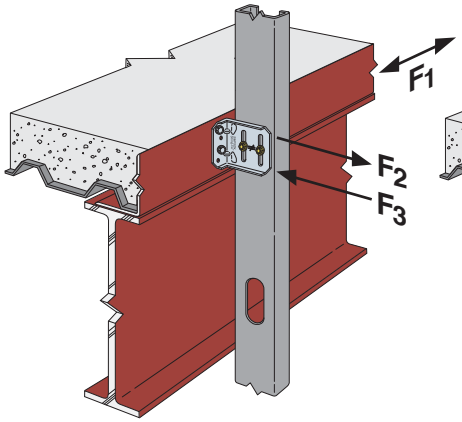


**Typical SCB/MSCB Installation**

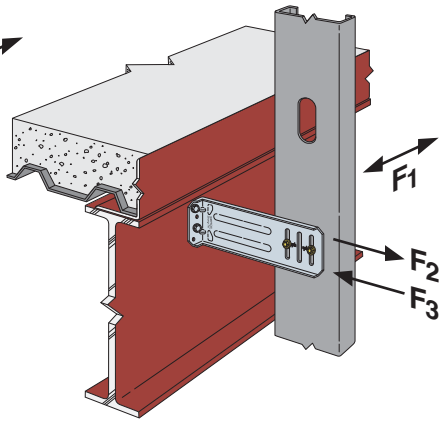


**SCB/MSCB Installation at Fascia Beam**

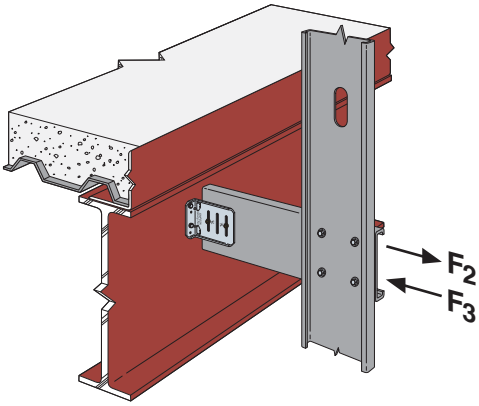


**Typical SCB/MSCB Installation with Stud Strut**

C-CF-2020 ©2020 SIMPSON STRONG-TIE COMPANY INC.

# **SCB/MSCB** Bypass Framing Slide-Clip Connector

## SCB/MSCB Allowable Connector Loads (lb.)

| Model No. | Connector Material Thickness mil (ga.) | L (in.) | No. of #14 Shouldered Screws[1] | Stud Thickness | | | | | | | | | | | | Code Ref. |
|---|---|---|---|---|---|---|---|---|---|---|---|---|---|---|---|---|
| | | | | 33 mil (20 ga.) | | | 43 mil (18 ga.) | | | 54 mil (16 ga.) | | | 68 mil (14 ga.) | | | |
| | | | | $F_1$[3,4] | $F_2$[2] | $F_3$[2] | $F_1$[3,4] | $F_2$[2] | $F_3$[2] | $F_1$[3,4] | $F_2$[2] | $F_3$[2] | $F_1$[3,4] | $F_2$[2] | $F_3$[2] | |
| SCB43.5 | 54 (16) | 3½ | 2 | 100 | 520 | 160 | 160 | 610 | 690 | 215 | 760 | 975 | 215 | 760 | 975 | IBC, FL, LA |
| SCB45.5 | 54 (16) | 5½ | 2 | 120 | 490 | 150 | 150 | 610 | 690 | 200 | 760 | 975 | 215 | 760 | 975 | IBC, FL, LA |
| | | | 3 | 120 | 675 | 150 | 150 | 895 | 1,000 | 200 | 990 | 1,260 | 215 | 990 | 1,260 | |
| MSCB45.5 | 68 (14) | 5½ | 2 | 120 | 490 | 185 | 185 | 780 | 690 | 250 | 1,055 | 1,200 | 270 | 1,195 | 1,475 | IBC, LA |
| | | | 3 | 120 | 675 | 185 | 185 | 1,070 | 1,000 | 250 | 1,220 | 1,930 | 270 | 1,365 | 1,930 | |
| SCB47.5 | 54 (16) | 7½ | 2 | 90 | 490 | 120 | 120 | 610 | 690 | 160 | 760 | 945 | 175 | 760 | 945 | IBC, FL, LA |
| | | | 3 | 90 | 675 | 120 | 120 | 895 | 1,000 | 160 | 990 | 1,260 | 175 | 990 | 1,260 | |
| MSCB47.5 | 68 (14) | 7½ | 2 | 105 | 490 | 140 | 140 | 780 | 690 | 190 | 1,055 | 1,200 | 205 | 1,195 | 1,475 | IBC, LA |
| | | | 3 | 105 | 675 | 140 | 140 | 1,070 | 1,000 | 190 | 1,220 | 1,930 | 205 | 1,365 | 1,930 | |
| SCB49.5 | 54 (16) | 9½ | 2 | 90 | 490 | 105 | 110 | 690 | 690 | 105 | 760 | 945 | 110 | 760 | 945 | IBC, FL, LA |
| | | | 3 | 90 | 675 | 105 | 110 | 895 | 1,000 | 105 | 990 | 1,260 | 110 | 990 | 1,260 | |
| SCB411.5 | 54 (16) | 11½ | 2 | 90 | 490 | 85 | 90 | 690 | 690 | 85 | 990 | 920 | 90 | 990 | 920 | |
| | | | 3 | 90 | 675 | 85 | 90 | 860 | 1,000 | 85 | 990 | 1,260 | 90 | 990 | 1,260 | |

1. When the SCB or MSCB connector is used with two shouldered screws, the screws may be installed in any two slots.
2. Allowable loads are based on clips installed with (4) #12–14 screws in the anchor leg. For other anchorage installations, the capacity of the connection system will be the minimum of the tabulated value and the allowable load from the SCB/MSCB Allowable Anchorage Loads table on p. 27.
3. Anchorage to the supporting structure using welds or a minimum of (2) fasteners is required.
4. Tabulated $F_1$ loads are based on assembly tests with the load through the centerline of stud. Tested failure mode due to screw pullout; therefore compare $F_1$ against $F_p$ calculated per ASCE 7-10 Chapter 13 with $a_p$ = 1.25 and $R_p$ = 1.0.

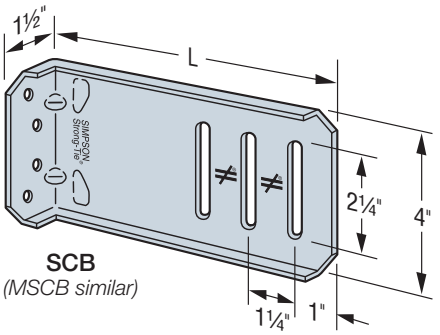


**SCB**
*(MSCB similar)*

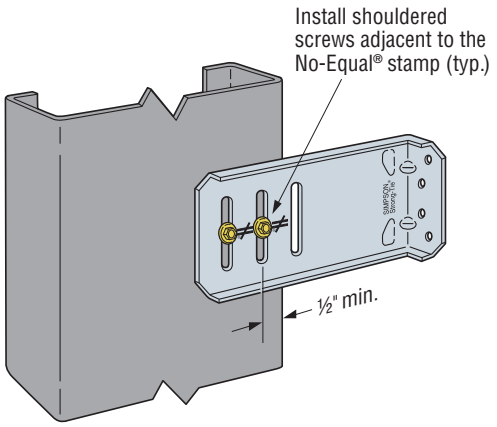


**SCB/MSCB Installation with Two Shouldered Screws**

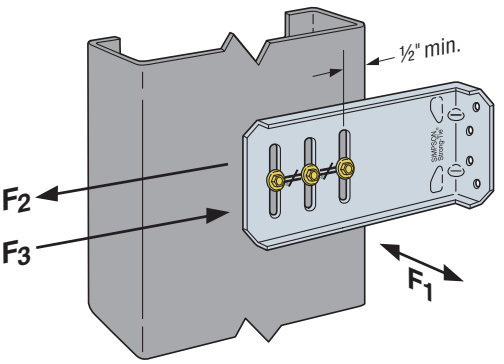


**SCB/MSCB Installation with Three Shouldered Screws**

C-CF-2020 ©2020 SIMPSON STRONG-TIE COMPANY INC.

# **SCB/MSCB** Bypass Framing Slide-Clip Connector



## SCB/MSCB Allowable Anchorage Loads

| Anchorage Type | Minimum Base Material | No. of Anchors | $F_2$ and $F_3$ | |
|---|---|---|---|---|
| | | | SCB | MSCB |
| #12–24 self-drilling screws Simpson Strong-Tie® X and XL Metal screws | A36 steel 3⁄16" thick | 2 | 1,115 | 1,150 |
| | | 3 | 1,645 | 1,725 |
| | | 4 | 2,230 | 2,300 |
| Simpson Strong-Tie 0.157" x 5⁄8" powder-actuated fasteners PDPAT-62KP | A36 steel 3⁄16" thick | 2 | 440 | 520 |
| | | 3 | 585 | 780 |
| | | 4 | 895 | 1,040 |
| Simpson Strong-Tie 0.157" x 5⁄8" powder-actuated fasteners PDPAT-62KP | A572 or A992 steel 3⁄16" thick | 2 | 585 | 610 |
| | | 3 | 800 | 915 |
| | | 4 | 1,170 | 1,220 |
| Simpson Strong-Tie ¼" x 1¾" Titen® 2 TTN25134H | Concrete $f'_c$ = 2,500 psi | 2 | 380 | 380 |
| | | 3 | 525 | 525 |
| | | 4 | 675 | 675 |
| Weld E70XX electrodes | A36 steel 3⁄16" thick | Hard side: 2" | 1,735 | 2,040 |
| | | Free side: 1" | | |

1. For additional important information, see General Information and Notes on p. 22.
2. Allowable loads are for clip anchorage only. The capacity of the connection system will be the minimum of the tabulated allowable anchorage loads the allowable load from the SCB/MSCB Allowable Connector Load table on p. 26.
3. Allowable loads for #12–24 self-drilling screws and PDPAT powder-actuated fasteners are based on installation in minimum 3⁄16" thick structural steel with $F_y$ = 36 ksi. PDPAT values are also provided for A572 steel. Values listed above may be used where other thicknesses of steel are encountered or other manufacturers are used, provided that the fastener has equal or better tested values (see p. 22). It is the responsibility of the designer to select the proper length fasteners based on the steel thickness installation.
4. For screw fastener installation into steel backed by concrete, predrilling of both the steel and the concrete is suggested. For predrilling use a maximum 3⁄16"-diameter drill bit.

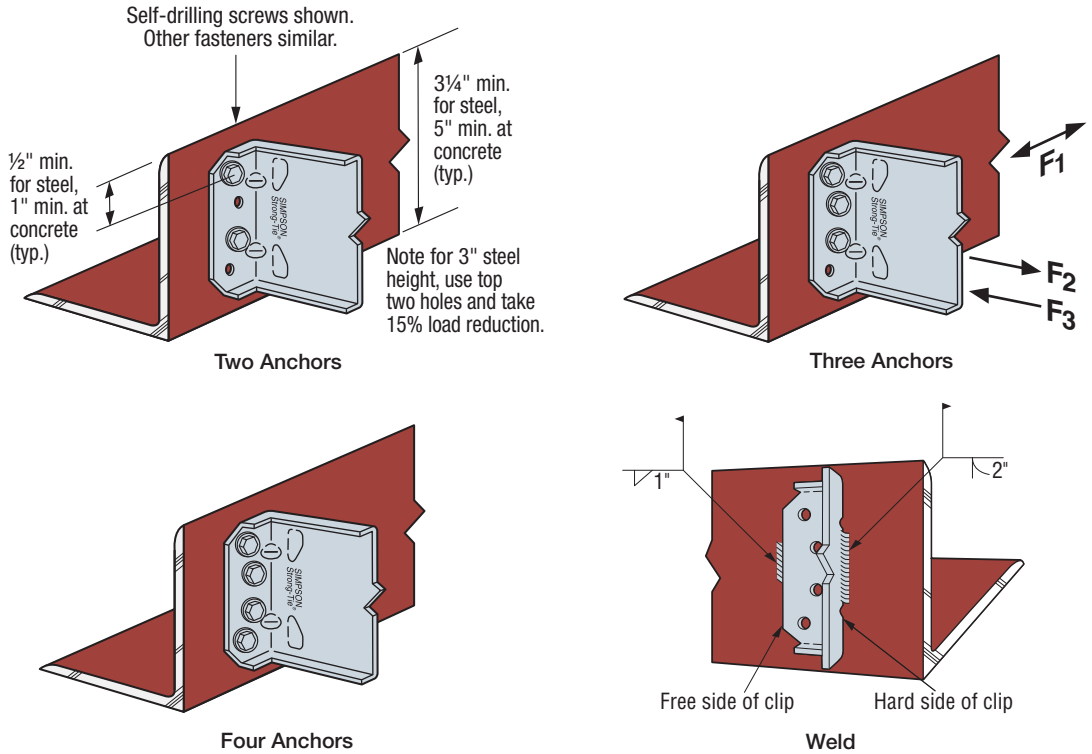


SCB/MSCB Anchor Layout

C-CF-2020 ©2020 SIMPSON STRONG-TIE COMPANY INC.

# **SCS** Seismic Bypass Framing Connector

The first product of its type to undergo full-scale cyclic research testing to determine its load capacities in real-world conditions, the SCS is a hybrid clip designed specifically to allow both slide-clip or fixed-clip applications in areas of high seismic activity. Everything about the SCS clip — from its heavy-duty 10- and 12-gauge steel manufacturing to its strategically placed darts to the location of its fastener slots and holes — has been engineered to provide exceptional resistance to in-plane seismic loads. Because slide-clip testing shows that attachment at the first slot is most critical to in-plane capacity, the SCS is designed to accommodate two large washer screws (included) at the first slot attached to the stud.

The SCS clip is the most versatile clip on the market making it the ideal clip in seismic and non-seismic areas. This clip has three prepunched oblong slots for slide applications and a pattern of round holes for fixed-clip applications to meet a range of load needs. In addition, the support leg features anchor holes for concrete supports using ¼"- or ½"-diameter concrete screws or bolts, plus smaller holes for steel supports using powder-actuated fasteners such as Simpson Strong-Tie® PDPAT 0.157"-diameter pins or #12 self-drilling Strong-Drive® XL Large-Head Metal screws.

**Features:**

- 3½", 6" and 8" lengths
- Slide slots used with shouldered washer screws (included) allow a full 1" of vertical deflection
- Precision-located stiffeners enhance strength while allowing ductility
- Simpson Strong-Tie No-Equal® stamps alongside slide slots indicate proper screw placement
- Dual-function clip with prepunched slots for slide application and small round holes for fixed application

**Material:** 12 ga. (97 mil) and 10 ga. (118 mil), 50 ksi

**Finish:** Galvanized (G90)

**Installation:**

- SCS32-5 permits 1" maximum standoff for fixed applications and 1½" maximum for slide applications. SCS62-5 and SCS82-5 maximum standoff are 2¼" for fixed applications and 3" for slide applications.
- Use the specified type and number of anchors.
- Slide applications — Use the specified number of XLSH78B1414 #14 shoulder screws (included). Install the screws in the slots adjacent to the No-Equal stamps.
- Fixed applications — Use the specified number of #10 screws (not included) in the designated screw holes.

**Codes:** See p. 11 for Code Reference Key Chart.

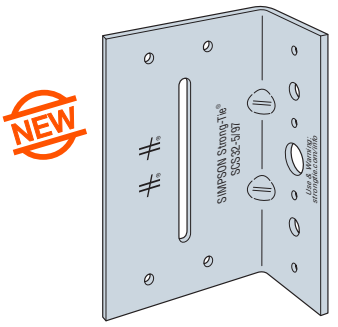


SCS32-5/97

**Load rated per ICC AC261 with the highest in-plane loads in the industry.**

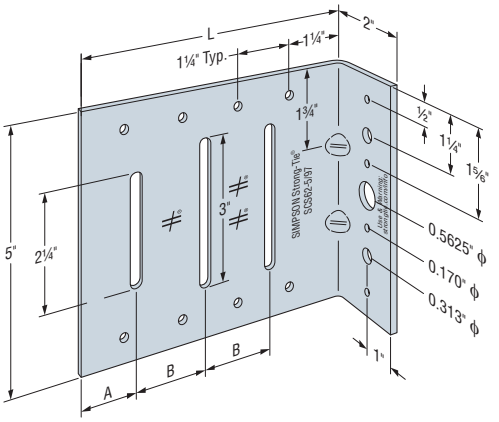


SCS62-5/97, SCS62-5/118

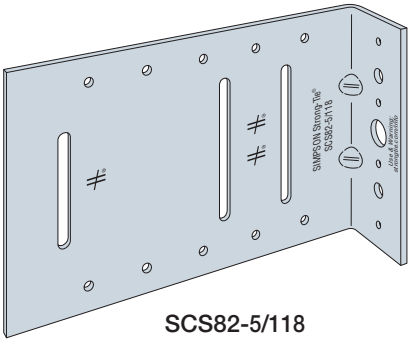


SCS82-5/118

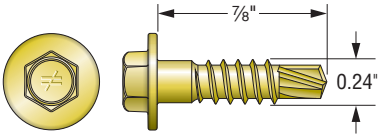


**XLSH78B1414**
**#14 Shouldered Screw for Attachment to Stud Framing Slide Application**
*(included)*

## Ordering Information

| Model No. | Order SKU | Thickness mil (ga.) | L (in.) | A (in.) | B (in.) |
|---|---|---|---|---|---|
| SCS32-5/97 | SCS32-5/97-KT25 | 97 (12) | 3½ | 1⅝ | — |
| SCS62-5/97 | SCS62-5/97-KT25 | 97 (12) | 6 | 1⅛ | 1½ |
| SCS62-5/118 | SCS62-5/118-KT25 | 118 (10) | 6 | 1⅛ | 1½ |
| SCS82-5/118 | SCS82-5/118-KT25 | 118 (10) | 8 | 1⅛ | 1½ |

1. Each box contains (25) connectors.
2. SCS32-5/97-KT25 comes with 55 screws for slide-clip applications. All other SCS kits come with 83 screws for slide-clip applications.

C-CF-2020 ©2020 SIMPSON STRONG-TIE COMPANY INC.

# **SCS** Seismic Bypass Framing Connector



## SCS Slide-Clip Allowable Connector Loads

| Model No. | Framing Members Thickness mil (ga.) | Fasteners to Framing Member | | Max. Standoff Distance (in.) | Allowable Load (lb.) | | | Code Ref. |
|---|---|---|---|---|---|---|---|---|
| | | Fastener Pattern | No. of #14 Shouldered Screws | | In-Plane Load $F_1$ | Tension Load $F_2$ | Comp. Load $F_3$ | |
| SCS32-5/97 | 33 (20) | S1 | 2 | 1½ | 200 | 420 | 420 | IBC, LA |
| SCS62-5/97 | | S1 | 3 | 1½ | 205 | 630 | 760 | |
| | | S2 | 3 | 3 | 205 | 630 | 760 | |
| SCS62-5/118 | 33 (20) | S1 | 3 | 1½ | 265 | 650 | 760 | |
| | | S2 | 3 | 3 | 265 | 650 | 760 | |
| SCS82-5/118 | | S1 | 3 | 1½ | 265 | 650 | 760 | |
| | | S2 | 3 | 3 | 265 | 650 | 760 | |
| SCS32-5/97 | 43 (18) | S1 | 2 | 1½ | 290 | 540 | 540 | |
| SCS62-5/97 | | S1 | 3 | 1½ | 350 | 895 | 1,165 | |
| | | S2 | 3 | 3 | 335 | 895 | 1,165 | |
| SCS62-5/118 | 43 (18) | S1 | 3 | 1½ | 435 | 940 | 1,165 | |
| | | S2 | 3 | 3 | 435 | 940 | 1,165 | |
| SCS82-5/118 | | S1 | 3 | 1½ | 435 | 940 | 1,165 | |
| | | S2 | 3 | 3 | 435 | 940 | 1,165 | |
| SCS32-5/97 | 54 (16) | S1 | 2 | 1½ | 540 | 890 | 890 | |
| SCS62-5/97 | | S1 | 3 | 1½ | 650 | 1,635 | 2,025 | |
| | | S2 | 3 | 3 | 620 | 1,635 | 1,530 | |
| SCS62-5/118 | 54 (16) | S1 | 3 | 1½ | 650 | 1,825 | 2,085 | |
| | | S2 | 3 | 3 | 620 | 1,825 | 2,085 | |
| SCS82-5/118 | | S1 | 3 | 1½ | 650 | 1,825 | 2,085 | |
| | | S2 | 3 | 3 | 620 | 1,825 | 2,085 | |
| SCS32-5/97 | 68 (14) | S1 | 2 | 1½ | 550 | 925 | 925 | |
| SCS62-5/97 | | S1 | 3 | 1½ | 705 | 2,060 | 2,160 | |
| | | S2 | 3 | 3 | 670 | 2,060 | 1,630 | |
| SCS62-5/118 | 68 (14) | S1 | 3 | 1½ | 705 | 2,065 | 2,220 | |
| | | S2 | 3 | 3 | 670 | 2,065 | 2,220 | |
| SCS82-5/118 | | S1 | 3 | 1½ | 705 | 2,065 | 2,220 | |
| | | S2 | 3 | 3 | 670 | 2,065 | 2,220 | |
| SCS32-5/97 | 97 (12) | S1 | 2 | 1½ | 650 | 925 | 925 | |
| SCS62-5/97 | | S1 | 3 | 1½ | 975 | 2,060 | 2,160 | |
| | | S2 | 3 | 3 | 930 | 2,060 | 1,630 | |
| SCS62-5/118 | 97 (12) | S1 | 3 | 1½ | 975 | 2,065 | 2,220 | |
| | | S2 | 3 | 3 | 930 | 2,065 | 2,220 | |
| SCS82-5/118 | | S1 | 3 | 1½ | 975 | 2,065 | 2,220 | |
| | | S2 | 3 | 3 | 930 | 2,065 | 2,220 | |

1. For additional important information, see General Information and Notes on p. 22.
2. SCS Allowable Connector Loads are also limited by the SCS Anchorage Load tables on pp. 32 and 33. Use the minimum tabulated values from the connector and anchorage load tables as applicable.
3. See illustrations on p. 31 for fastener placement to stud framing.
4. Tabulated $F_1$ loads are based on assembly tests with the load through the centerline of the stud. Tests are governed by fastener connections.
5. $F_1$ loads are based on maximum standoff distances of 1½" or 3" as shown. SCS32-5/97 maximum 1½" standoff.

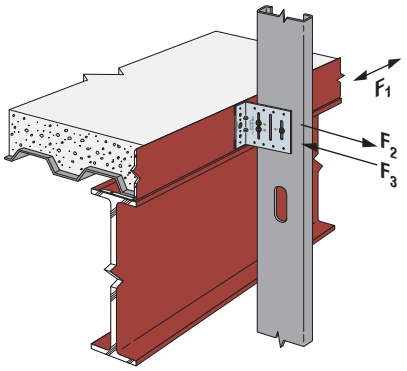


**Typical SCS Slide-Clip Installation**

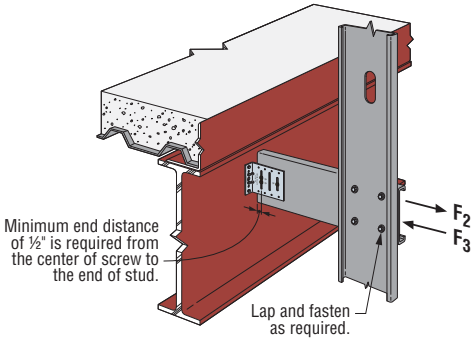


**Typical SCS Slide-Clip Installation with Stud Strut**

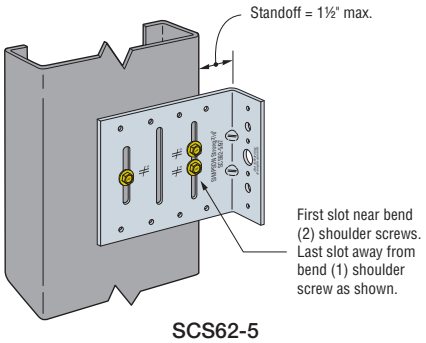


**SCS62-5**
**1½" Maximum Standoff**
*(Pattern S1 — reference p. 31 for all fastener patterns)*

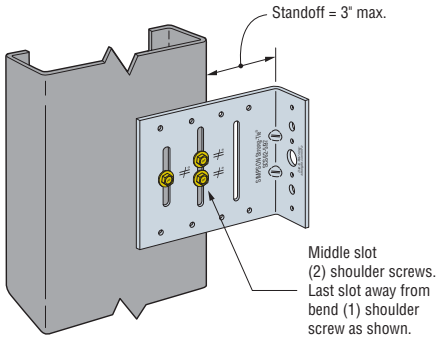


**SCS62-5**
**3" Maximum Standoff**
*(Pattern S2 — reference p. 31 for all fastener patterns)*

C-CF-2020 ©2020 SIMPSON STRONG-TIE COMPANY INC.

# **SCS** Seismic Bypass Framing Connector

SIMPSON Strong-Tie®

## SCS Fixed-Clip Allowable Connector Loads

| Model No. | Framing Members Thickness mil (ga.) | Fasteners to Framing Member | | Max. Standoff Distance (in.) | Allowable Load (lb.) | | | | Code Ref. |
|---|---|---|---|---|---|---|---|---|---|
| | | Fastener Pattern | No. of #10 Self-Drilling Screws | | In-Plane Load $F_1$ | Tension Load $F_2$ | Comp. Load $F_3$ | Shear Load $F_4$ | |
| SCS32-5/97 | 33 (20) | R1 | 4 | 1 | 160 | 705 | 705 | 705 | IBC, LA |
| SCS62-5/97 | | R1 | 6 | 2¼ | 145 | 1,060 | 1,060 | 650 | |
| | | R2 | 8 | 1 | 175 | 1,415 | 1,415 | 995 | |
| SCS62-5/118 | 33 (20) | R1 | 6 | 2¼ | 150 | 1,060 | 1,060 | 650 | |
| | | R2 | 8 | 1 | 175 | 1,415 | 1,415 | 995 | |
| SCS82-5/118 | | R1 | 8 | 2¼ | 150 | 1,415 | 1,415 | 665 | |
| | | R2 | 10 | 1 | 175 | 1,765 | 1,765 | 1,050 | |
| SCS32-5/97 | 43 (18) | R1 | 4 | 1 | 200 | 1,050 | 1,050 | 1,050 | |
| SCS62-5/97 | | R1 | 6 | 2¼ | 190 | 1,580 | 1,580 | 970 | |
| | | R2 | 8 | 1 | 225 | 2,105 | 2,105 | 1,480 | |
| SCS62-5/118 | 43 (18) | R1 | 6 | 2¼ | 195 | 1,580 | 1,580 | 970 | |
| | | R2 | 8 | 1 | 245 | 2,105 | 2,105 | 1,480 | |
| SCS82-5/118 | | R1 | 8 | 2¼ | 195 | 2,105 | 2,105 | 990 | |
| | | R2 | 10 | 1 | 245 | 2,630 | 2,105 | 1,565 | |
| SCS32-5/97 | 54 (16) | R1 | 4 | 1 | 395 | 2,135 | 2,135 | 1,405 | |
| SCS62-5/97 | | R1 | 6 | 2¼ | 345 | 3,205 | 2,275 | 1,970 | |
| | | R2 | 8 | 1 | 410 | 4,275 | 3,125 | 3,005 | |
| SCS62-5/118 | 54 (16) | R1 | 6 | 2¼ | 360 | 3,205 | 2,440 | 1,970 | |
| | | R2 | 8 | 1 | 445 | 4,275 | 3,350 | 3,005 | |
| SCS82-5/118 | | R1 | 8 | 2¼ | 360 | 4,275 | 2,440 | 2,010 | |
| | | R2 | 10 | 1 | 445 | 4,540 | 3,350 | 3,180 | |
| SCS32-5/97 | 68 (14) | R1 | 4 | 1 | 445 | 2,160 | 2,160 | 1,405 | |
| SCS62-5/97 | | R1 | 6 | 2¼ | 410 | 3,240 | 2,275 | 1,970 | |
| | | R2 | 8 | 1 | 435 | 4,320 | 3,125 | 3,005 | |
| SCS62-5/118 | 68 (14) | R1 | 6 | 2¼ | 535 | 3,240 | 2,440 | 1,970 | |
| | | R2 | 8 | 1 | 540 | 4,320 | 3,350 | 3,005 | |
| SCS82-5/118 | | R1 | 8 | 2¼ | 535 | 4,320 | 2,980 | 2,010 | |
| | | R2 | 10 | 1 | 675 | 4,720 | 4,095 | 3,180 | |
| SCS32-5/97 | 97 (12) | R1 | 4 | 1 | 635 | 2,160 | 2,160 | 1,405 | |
| SCS62-5/97 | | R1 | 6 | 2¼ | 775 | 3,240 | 2,275 | 1,970 | |
| | | R2 | 8 | 1 | 775 | 4,320 | 3,125 | 3,005 | |
| SCS62-5/118 | 97 (12) | R1 | 6 | 2¼ | 775 | 3,240 | 2,440 | 1,970 | |
| | | R2 | 8 | 1 | 775 | 4,320 | 3,350 | 3,005 | |
| SCS82-5/118 | | R1 | 8 | 2¼ | 775 | 4,320 | 2,980 | 2,010 | |
| | | R2 | 10 | 1 | 775 | 4,720 | 4,095 | 3,180 | |

1. For additional important information, see General Information and Notes on p. 22.
2. SCS Allowable Connector Loads are also limited by the SCS Anchorage Load tables on pp. 32 and 33. Use the minimum tabulated values from the connector and anchorage load tables as applicable.
3. See illustrations on p. 31 for screw fastener placement to stud framing.
4. Tabulated $F_1$ loads are based on assembly tests with the load through the centerline of the stud. Tests are governed by fastener connections.
5. $F_1$ loads are based on maximum standoff distances of 1" or 2¼" as shown. SCS32-5/97 maximum 1" standoff.
6. XLSH78B1414 #14 shouldered screw may used to replace #10 screws in a fixed application.

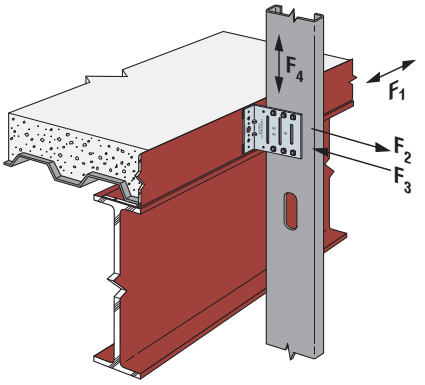


**Typical SCS Fixed-Clip Installation**

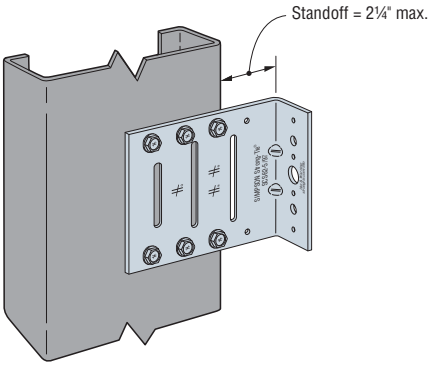


**SCS62-5**
**2¼" Maximum Standoff**
*(Pattern R1 — reference p. 31 for all fastener patterns)*

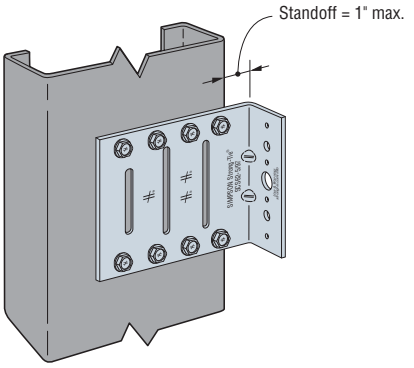


**SCS62-5**
**1" Maximum Standoff**
*(Pattern R2 — reference p. 31 for all fastener patterns)*

C-CF-2020 ©2020 SIMPSON STRONG-TIE COMPANY INC.

# **SCS** Seismic Bypass Framing Connector



## Fastener Patterns

| Model No. | Slide Conditions: Pattern S1 | Slide Conditions: Pattern S2 | Fixed Conditions: Pattern R1 | Fixed Conditions: Pattern R2 |
|---|---|---|---|---|
| SCS32-5/97 | 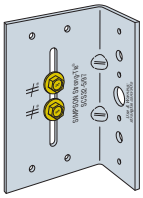 | | 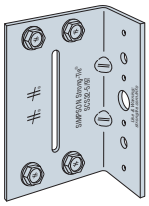 | |
| SCS62-5/97<br>SCS62-5/118 | 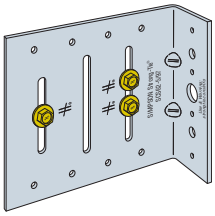 | 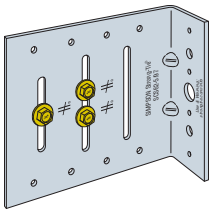 | 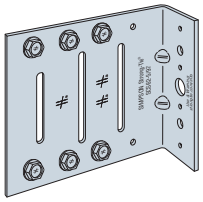 | 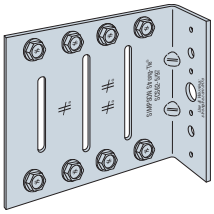 |
| SCS82-118 | 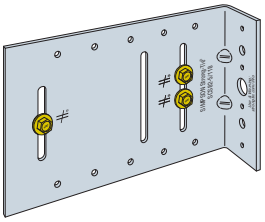 | 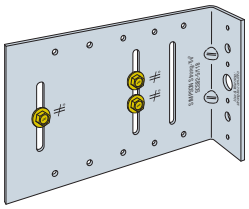 | 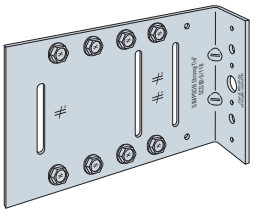 | 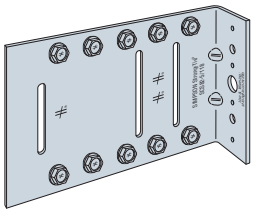 |

## First of Its Kind — Full-Scale Cyclic Testing for Bypass Clips

### The Re-Engineered SCS Clip

Our engineering expertise went into our new SCS seismic bypass clip. All aspects of the clip were evaluated. One significant modification was the location of our screw holes and slots. Our tests showed that in-plane load is not evenly applied to all screws. In-plane load, or seismic shaking along the plane of the wall, applies predominantly to the first row of screws. Our SCS clip was designed to accommodate two shoulder screws at the first screw line, doubling the number of screws effectively resisting in-plane load.

### Testing Results Explained

To determine the in-plane performance of our SCS clips, Simpson Strong-Tie conducted full-scale cyclic testing on our uniaxial shake table at our Tye Gilb Research Laboratory in Stockton, CA. The full-scale test results were used to develop a representative component test to determine various combinations of stud/clip in-plane capacities. This first-of-its-kind testing represents something that was sorely needed because of the lack of industry testing and design standards. Our tests also allowed us to re-engineer the bypass clip to significantly increase the in-plane capacities. Prior to our tested values, various unproven calculation techniques have been used to estimate in-plane loads. Our tested in-plane loads eliminate the guesswork and thus mitigate risk for engineers, contractors and building owners.

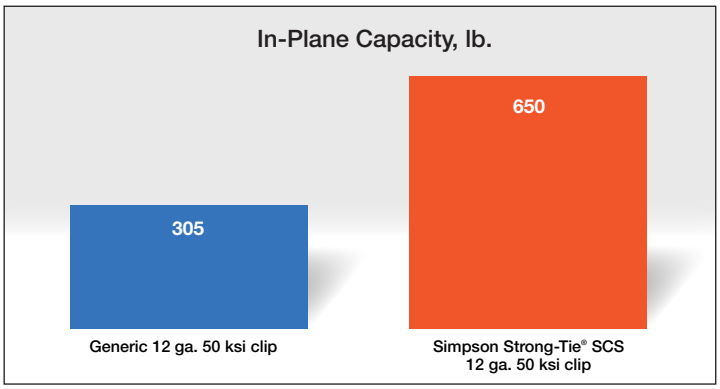


Test based on 16 ga. 50 ksi stud and 12 ga. generic clip with (3) #14 screws through slot with flat washer tested in same manner as Simpson Strong-Tie SCS 12 ga. 50 ksi clip in slide-clip application.

C-CF-2020 ©2020 SIMPSON STRONG-TIE COMPANY INC.

# **SCS** Seismic Bypass Framing Connector

## SCS Allowable Anchorage Loads to Steel

| Anchorage Type | Minimum Base Material | No. of Anchors | Allowable Load (lb.) | | |
|---|---|---|---|---|---|
| | | | $F_1$ | $F_2$ and $F_3$ | $F_4$ |
| #12–24 self-drilling screws Simpson Strong-Tie® X and XL Metal screws | A36 steel 3⁄16" thickness | 3 | 730 | 1,725 | 1,210 |
| | | 4 | 975 | 2,545 | 3,180 |
| #14 self-drilling screws Simpson Strong-Tie E Metal screw E1B1414 | A36 steel 3⁄16" thickness | 3 | 730 | 1,730 | 1,210 |
| | | 4 | 975 | 2,620 | 2,620 |
| Simpson Strong-Tie 0.157" x 5⁄8" powder-actuated fasteners PDPAT-62KP | A36 steel 3⁄16" thickness | 3 | — | 780 | — |
| | | 4 | — | 1,040 | 1,040 |
| Simpson Strong-Tie 0.157" x 5⁄8" powder-actuated fasteners PDPAT-62KP | A572 or A992 steel 3⁄16" thickness | 3 | — | 1,260 | — |
| | | 4 | — | 1,710 | 1,710 |
| Weld E70XX electrodes | A36 steel 3⁄16" thickness | (2) Hard side: 1.5" | 2,040 | 4,720 | 3,865 |
| | | (2) Free side: 1.5" | | | |

1. For additional important information, see General Information and Notes on p. 22.
2. Allowable anchorage loads are also limited by the SCS Connector Loads on p. 29 for slide applications and p. 30 for fixed applications. Use the minimum tabulated values from the connector and anchorage load tables as applicable.
3. Allowable loads for self-drilling screws and PDPAT powder-actuated fasteners are based on installation in minimum 3⁄16"-thick structural steel with $F_y$ = 36 ksi. PDPAT values are also provided for A572 steel. Values listed above maybe used where other thicknesses of steel are encountered provided that the fastener has equal or better tested values into thicker steel. It is the responsibility of the designer to select the proper length fasteners based on the steel thickness installation.
4. For screw fastener installation into steel backed by concrete, predrilling of both the steel and the concrete is suggested. For predrilling, use a maximum 3⁄16"-diameter drill bit.
5. $F_1$, $F_2$, $F_3$ and $F_4$ load directions are the same as SCS Connector Loads on p. 29 for slide applications and p. 30 for fixed applications.

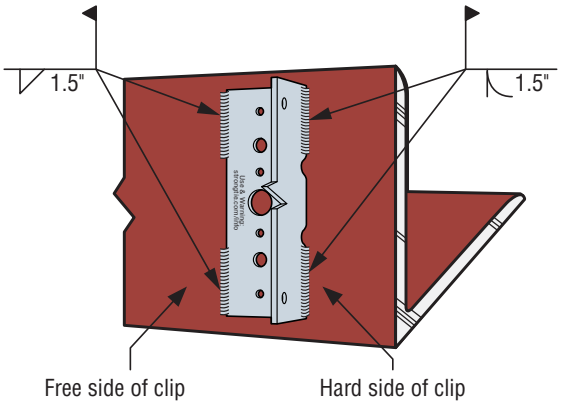


**Weld**

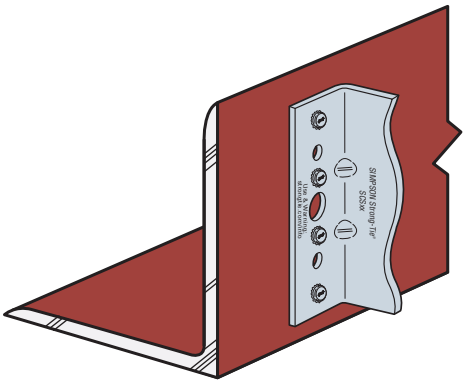

**4 PAF Anchor Placement**
*(4 screws similar)*

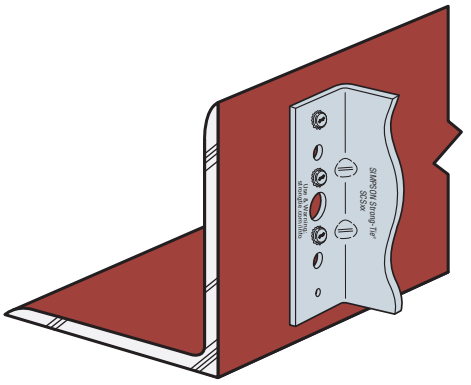

**3 PAF Anchor Placement**
*(3 screws similar)*

C-CF-2020 ©2020 SIMPSON STRONG-TIE COMPANY INC.

# **SCS** Seismic Bypass Framing Connector



## SCS Allowable Anchorage Loads to Concrete

| Model No. | Anchor Bolt Quantity and Diameter | Nominal Embed. Depth, $h_{nom}$ (in.) | Minimum Edge Distance (in.) | Minimum End Distance (in.) | Allowable Load (lb.) | | | | | |
|---|---|---|---|---|---|---|---|---|---|---|
| | | | | | $f'_c$ = 3,000 psi | | | $f'_c$ = 4,000 psi | | |
| | | | | | $F_1$ | $F_2$ and $F_3$ | $F_4$ | $F_1$ | $F_2$ and $F_3$ | $F_4$ |
| **Uncracked Concrete, Wind and Seismic in SDC A & B [4,6]** | | | | | | | | | | |
| Titen HD® | (2) ¼" | 1⅝ | 1½ | 2⅝ | 375 | 725 | 565 | 430 | 840 | 655 |
| | | 2½ | | | 410 | 525 | 565 | 475 | 605 | 655 |
| Strong-Bolt® 2 | (2) ¼" | 1¾ | 4 | 4 | 750 | 1,245 | 750 | 750 | 1,245 | 750 |
| Titen HD | (1) ½" | 3¼ | 2½ | 2⅝ | 525 | 1,105 | 665 | 605 | 1,245 | 770 |
| | | 3¾ | | | 540 | 1,110 | 690 | 625 | 1,245 | 795 |
| Strong-Bolt 2 | (1) ½" | 2¾ | 4 | 4 | 1,035 | 1,065 | 1,145 | 1,195 | 1,230 | 1,325 |
| | | 3⅞ | | | 1,120 | 1,245 | 1,400 | 1,295 | 1,245 | 1,620 |
| AT-XP® | (1) ½" | 7 | 2½ | 2⅝ | 1,160 | 1,145 | 1,450 | 1,340 | 1,145 | 1,675 |
| SET-XP® | | | | | 1,160 | 1,050 | 1,450 | 1,340 | 1,050 | 1,675 |
| SET-3G™ | | | | | 1,160 | 1,245 | 1,450 | 1,340 | 1,245 | 1,675 |
| **Cracked Concrete, Wind and Seismic in SDC A & B [4,6]** | | | | | | | | | | |
| Titen HD | (2) ¼" | 1⅝ | 1½ | 2⅝ | 265 | 690 | 405 | 305 | 800 | 465 |
| | | 2½ | | | 295 | 770 | 445 | 340 | 885 | 515 |
| Titen HD | (1) ½" | 3¼ | 2½ | 2⅝ | 375 | 790 | 475 | 430 | 910 | 550 |
| | | 3¾ | | | 385 | 790 | 490 | 445 | 910 | 565 |
| Strong-Bolt 2 | (1) ½" | 2¾ | 4 | 4 | 740 | 1,225 | 925 | 855 | 1,245 | 1,065 |
| | | 3⅞ | | | 800 | 1,245 | 1,000 | 925 | 1,245 | 1,155 |
| AT-XP | (1) ½" | 7 | 2½ | 2⅝ | 830 | 1,245 | 1,035 | 955 | 1,245 | 1,195 |
| SET-XP | | | | | 830 | 1,205 | 1,035 | 955 | 1,205 | 1,195 |
| SET-3G | | | | | 830 | 1,245 | 1,035 | 955 | 1,245 | 1,195 |
| **Cracked Concrete, Seismic in SDC C Through F [5,6]** | | | | | | | | | | |
| Titen HD | (2) ¼" | 1⅝ | 1½ | 2⅝ | 310 | 605 | 470 | 360 | 700 | 545 |
| | | 2½ | | | 340 | 670 | 520 | 395 | 775 | 600 |
| Titen HD | (1) ½" | 3¼ | 2½ | 2⅝ | 435 | 690 | 555 | 505 | 800 | 640 |
| | | 3¾ | | | 450 | 690 | 575 | 520 | 800 | 660 |
| Strong-Bolt 2 | (1) ½" | 2¾ | 4 | 4 | 860 | 1,070 | 1,075 | 995 | 1,240 | 1,245 |
| | | 3⅞ | | | 935 | 1,245 | 1,170 | 1,080 | 1,245 | 1,350 |
| AT-XP | (1) ½" | 7 | 2½ | 2⅝ | 965 | 1,245 | 1,210 | 1,115 | 1,245 | 1,395 |
| SET-XP | | | | | 965 | 1,055 | 1,210 | 1,115 | 1,055 | 1,395 |
| SET-3G | | | | | 965 | 1,245 | 1,210 | 1,115 | 1,245 | 1,395 |

1. Allowable anchor capacities have been determined using ACI 318-14 Chapter 17 calculations with a minimum concrete compressive strength ($f'_c$) of 3,000 and 4,000 psi in normal-weight concrete. Tabulated values shall be multiplied by a factor ($\lambda_a$) of 0.6 for sand light-weight concrete.
2. Load values are for group anchors based on ACI 318, condition B, load factors from ACI 318-14 Section 5.3, no supplement edge reinforcement, $\Psi_{c,V}$ = 1.0 for cracked concrete and periodic special inspection.
3. Allowable Stress Design (ASD) values were determined by multiplying calculated LRFD capacities by a conversion factor, Alpha ($\alpha$), of 0.70 for seismic load and 0.6 for wind loads. ASD values for other combinations may be determined using alternate conversion factors.
4. Tabulated allowable ASD loads for Wind and Seismic in SDC A&B are based on using wind conversion factors and may be increased by 1.17 for SDC A and B only.
5. Design loads shall include the over-strength factor per ASCE7 Section 12.4.3. For fasteners in exterior wall connection systems, $\Omega_o$ = 1.5 per Table 13.5-1.
6. Tabulated allowable loads are based on anchorage only. The capacity of the connection system shall be the minimum of the allowable anchorage load and the SCS allowable connector loads on p. 29 for slide applications and p. 30 for fixed applications.
7. Shaded values are limited by connector serviceability and strength in a single-fastener anchorage.
8. For anchor subjected to both tension and shear loads, it shall be designed to satisfy the following:
   a. For $N_a / N_{all} \leq 0.2$, the full allowable load in shear is permitted.
   b. For $V_a / V_{all} \leq 0.2$, the full allowable load in tension is permitted.
   c. For all other cases, $N_a / N_{all} + V_a / V_{all} \leq 1.2$, where
      $N_a$ = Applied ASD tension load.
      $N_{all}$ = Allowable $F_2$ or $F_3$ load column from SCS allowable anchorage loads to concrete table.
      $V_a$ = Applied ASD shear load.
      $V_{all}$ = Allowable $F_4$ or $F_1$ load column from the SCS allowable anchorage loads to concrete table.

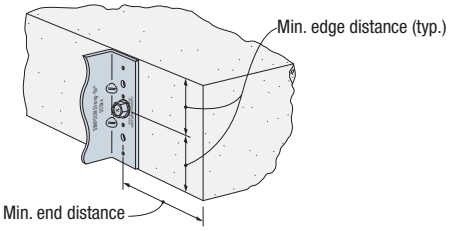


**(1) Anchor, End and Edge Distance**

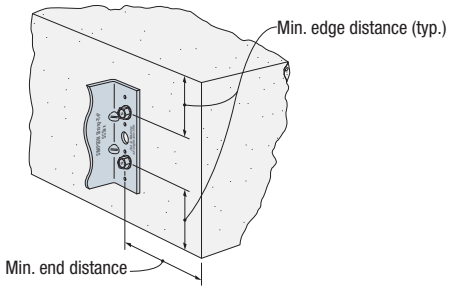


**(2) Anchor, End and Edge Distance**

C-CF-2020 ©2020 SIMPSON STRONG-TIE COMPANY INC.

# **SC** Bypass Framing Slide-Clip Connector

Ideal for high-seismic areas, Simpson Strong-Tie® SC connectors are the optimal solution for slide-clip bypass framing. SC clips are often welded to the structure in high-seismic zones, but they also feature anchorage holes so that concrete screws or powder-actuated fasteners can be used to attach the clip to the structure. In addition to anchorage versatility, the SC clips include "No-Equal" stamps at the center of the slots to ensure proper shouldered screw placement. SC connectors are manufactured using heavy-duty 10- and 12-gauge steel to provide exceptional resistance to in-plane seismic load.

**Features:**

- The clips come in lengths of 3½", 6" and 8" for use with 3⅝", 6" and 8" studs, respectively
- The maximum stand-off distance is 1" for 3⅝" studs and 1½" for 6" and 8" studs
- Provides a full ¾" of both upward and downward deflection
- Embossments in the bend line provide increased strength and stiffness in the $F_1$ and $F_2$ load directions, but are positioned towards the center of the clip so that 1½" long welds can be applied at the top and bottom of the clip
- Prepunched large-diameter anchor holes accommodate ¼"-diameter concrete screws like the Simpson Strong-Tie Titen HD®
- Prepunched small-diameter anchor holes accommodate powder-actuated fasteners like the 0.157"-diameter Simpson Strong-Tie PDPAT or the #12 self-drilling Simpson Strong-Tie Strong-Drive® XL Large-Head Metal screw
- Precision-manufactured shouldered screws, provided with SC connectors, are designed to prevent overdriving and to ensure the clip functions properly

**Material:** 50 ksi

**Finish:** Galvanized (G90)

**Installation:**

- Use the specified type and number of anchors.
- Use the specified number of XLSH78B1414 #14 shouldered screws (included). Install the screws in the slots adjacent to the "No-Equal" stamps.
- Use one shouldered screw per slot (maximum).

**Codes:** See p. 11 for Code Reference Key Chart

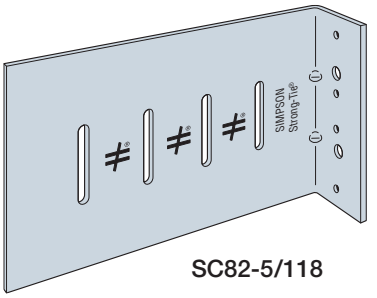


SC82-5/118

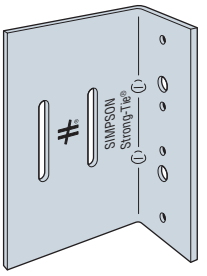


SC32-5/97

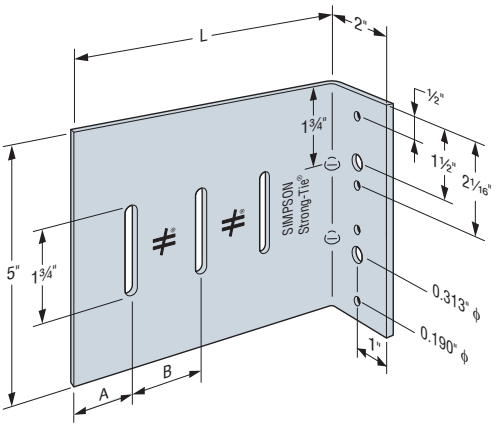


SC62-5/97
SC62-5/118

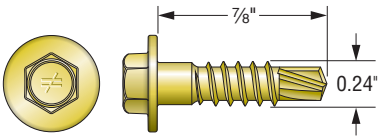


XLSH78B1414
#14 Shouldered Screw for Attachment to Stud Framing
*(included)*

## Ordering Information and Dimensions

| Model No. | Ordering SKU | Thickness mil (ga.) | L (in.) | A (in.) | B (in.) |
|---|---|---|---|---|---|
| SC32-5/97 | SC32-5/97-KT25 | 97 (12) | 3½ | ⅞ | 1¼ |
| SC62-5/97 | SC62-5/97-KT25 | 97 (12) | 6 | 1⅛ | 1½ |
| SC62-5/118 | SC62-5/118-KT25 | 118 (10) | 6 | 1⅛ | 1½ |
| SC82-5/118 | SC82-5/118-KT25 | 118 (10) | 8 | 1⅝ | 1½ |

1. Each box contains (25) connectors and enough shouldered screws for installation.
2. Replacement #14 shouldered screws for SC connectors are XLSH78B1414-RP83.

C-CF-2020 ©2020 SIMPSON STRONG-TIE COMPANY INC.

# **SC** Bypass Framing Slide-Clip Connector



## SC Allowable Connector Loads

| Model No. | Stud Thickness mil (ga.) | Fasteners to Stud: Allowable Pullout per Single #14 Shouldered Screw | Fasteners to Stud: No. of #14 Shouldered Screws | Allowable Load (lb.): $F_1$ 1" Stand-Off | Allowable Load (lb.): $F_1$ 1½" Stand-Off | Allowable Load (lb.): $F_2$ | Allowable Load (lb.): $F_3$ | Code Ref. |
|---|---|---|---|---|---|---|---|---|
| SC32-5/97 | 33 (20) | 100 | 2 | 170 | — | 585 | 715 | — |
| SC62-5/97 | | | 2 | 100 | 115 | 585 | 715 | |
| | | | 3 | 115 | 130 | 880 | 1,070 | |
| SC62-5/118 | | | 2 | 100 | 115 | 585 | 710 | |
| | | | 3 | 115 | 130 | 880 | 1,070 | |
| SC82-5/118 | | | 2 | 115 | 130 | 585 | 710 | |
| | | | 4 | 115 | 130 | 1,170 | 1,425 | |
| SC32-5/97 | 43 (18) | 145 | 2 | 220 | — | 765 | 930 | |
| SC62-5/97 | | | 2 | 135 | 155 | 765 | 930 | |
| | | | 3 | 150 | 175 | 1,145 | 1,395 | |
| SC62-5/118 | | | 2 | 135 | 155 | 765 | 930 | |
| | | | 3 | 150 | 175 | 1,145 | 1,395 | |
| SC82-5/118 | | | 2 | 150 | 175 | 765 | 930 | |
| | | | 4 | 150 | 175 | 1,525 | 2,125 | |
| SC32-5/97 | 54 (16) | 270 | 2 | 300 | — | 1,145 | 1,645 | |
| SC62-5/97 | | | 2 | 255 | 295 | 1,145 | 1,645 | |
| | | | 3 | 265 | 305 | 2,120 | 2,345 | |
| SC62-5/118 | | | 2 | 255 | 295 | 1,405 | 1,685 | |
| | | | 3 | 265 | 305 | 2,110 | 2,530 | |
| SC82-5/118 | | | 2 | 260 | 300 | 1,405 | 1,685 | |
| | | | 4 | 260 | 300 | 2,810 | 3,370 | |
| SC32-5/97 | 68 (14) | 410 | 2 | 375 | — | 1,695 | 1,645 | |
| SC62-5/97 | | | 2 | 320 | 370 | 1,695 | 1,645 | |
| | | | 3 | 335 | 385 | 2,540 | 2,345 | |
| SC62-5/118 | | | 2 | 330 | 380 | 2,165 | 2,040 | |
| | | | 3 | 345 | 395 | 3,250 | 3,060 | |
| SC82-5/118 | | | 2 | 325 | 375 | 2,165 | 2,085 | |
| | | | 4 | 325 | 375 | 4,330 | 4,165 | |
| SC32-5/97 | 97 (12) | 725 | 2 | 540 | — | 1,695 | 1,645 | |
| SC62-5/97 | | | 2 | 555 | 555 | 1,695 | 1,645 | |
| | | | 3 | 555 | 555 | 2,540 | 2,345 | |
| SC62-5/118 | | | 2 | 555 | 555 | 2,165 | 2,040 | |
| | | | 3 | 635 | 635 | 3,250 | 3,060 | |
| SC82-5/118 | | | 2 | 465 | 465 | 2,165 | 2,085 | |
| | | | 4 | 465 | 465 | 4,330 | 4,165 | |

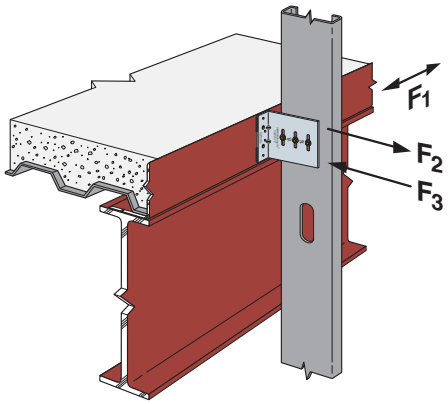


**Typical SC Installation**

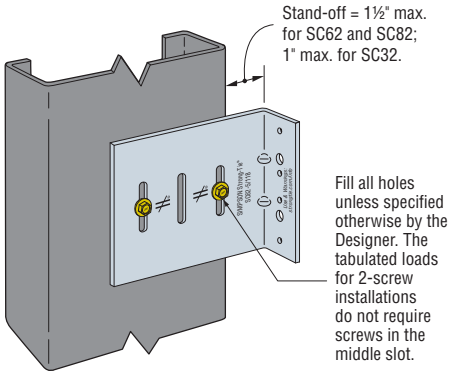


**SC62 with Two Screws**
*(SC82 similar)*

1. For additional important information, see General Information and Notes on p. 22.
2. SC Allowable Connector Loads are also limited by the SC Anchorage Load tables on pp. 36 and 37. Use the minimum tabulated values from the connector and anchorage load tables as applicable.
3. See illustration for fastener placement when using only two shouldered screws to the stud.
4. Tabulated $F_1$ loads are based on assembly tests with the load through the centerline of the stud. Tested failure modes were due to screw pullout; therefore compare $F_1$ against $F_p$ calculated per ASCE 7-10 Chapter 13 with $a_p = 1.25$ and $R_p = 1.0$.
5. $F_1$ loads are based on maximum stand-off distances of 1" or 1½" as shown. Other loads are applicable to a 1" stand-off for SC32 and 1" or 1½" stand-off for SC62 and SC82.
6. At the bend line, the gross allowable plastic moment in the $F_1$ load direction for 97 mil (12 ga.) and 118 mil (10 ga.) SC connectors are 395 in.-lb. and 675 in.-lb., respectively.
7. At a vertical slot, the net allowable plastic moment in the $F_1$ load direction for 97 mil (12 ga.) and 118 mil (10 ga.) SC connectors are 260 in.-lb. and 440 in.-lb., respectively.

C-CF-2020 ©2020 SIMPSON STRONG-TIE COMPANY INC.

# **SC** Bypass Framing Slide-Clip Connector

## SC Allowable Anchorage Loads to Steel

| Anchorage Type | Minimum Base Material | No. of Anchors | Allowable Load (lb.) | |
|---|---|---|---|---|
| | | | $F_1$ | $F_2$ and $F_3$ |
| #12–24 self-drilling screws<br>Strong-Drive® X and XL Metal screws | A36 steel<br>3⁄16" thick | 4 | — | 2,545 |
| #14 self-drilling screws<br>Simpson Strong-Tie E Metal screw<br>E1B1414 | A36 steel<br>3⁄16" thick | 4 | — | 2,620 |
| Simpson Strong-Tie<br>0.157" x 5⁄8" powder-actuated fasteners<br>PDPAT-62KP | A36 steel<br>3⁄16" thick | 4 | — | 1,040 |
| Simpson Strong-Tie<br>0.157" x 5⁄8" powder-actuated fasteners<br>PDPAT-62KP | A572 grade 50<br>or A992 steel<br>3⁄16" thick | 4 | — | 1,710 |
| Weld<br>E70XX electrodes | A36 steel<br>3⁄16" thick | (2) Hard side: 1.5"<br>(2) Free side: 1.5" | 2,110 | 3,710 |

1. For additional important information, see General Information and Notes on p. 22.
2. Allowable anchorage loads are also limited by the SC Connector Load Table on p. 35. Use the minimum tabulated values from the connector and anchorage load tables as applicable.
3. Allowable loads for #12–24 self-drilling screws and PDPAT powder-actuated fasteners are based on installation in minimum 3⁄16" thick structural steel with $F_y$ = 36 ksi. PDPAT values are also provided for A572 steel. Values listed above may be used where other thicknesses of steel are encountered or other manufacturers are used, provided that the fastener has equal or better tested values (see p. 22). It is the responsibility of the designer to select the proper length fasteners based on the steel thickness installation.
4. For screw fastener installation into steel backed by concrete, predrilling of both the steel and the concrete is suggested. For predrilling use a maximum 3⁄16"-diameter drill bit.

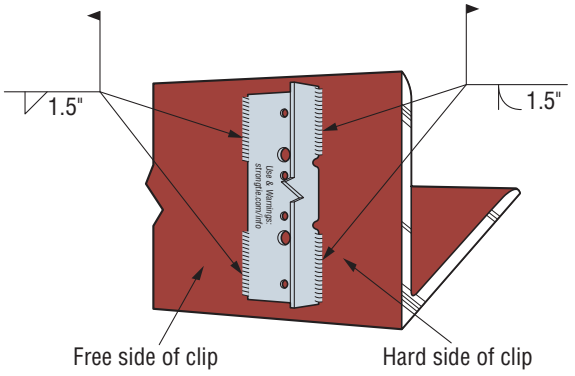


**Weld Anchorage**

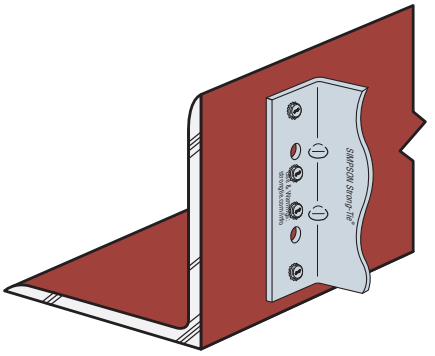

**4 PAF Anchor Placement**
*(4 screws similar)*

**SC Anchor Layout**

C-CF-2020 ©2020 SIMPSON STRONG-TIE COMPANY INC.

# **SC** Bypass Framing Slide-Clip Connector



## Allowable Titen HD® Anchorage Loads into Concrete with SC Clip

| Anchorage Type | Nominal Embedment (in.) | Anchor Quantity and Size | $f'_c$ (psi) | Load Direction | Wind and Seismic in SDC A&B | | Seismic in SDC C through F |
|---|---|---|---|---|---|---|---|
| | | | | | Uncracked Concrete | Cracked Concrete | Cracked Concrete[6] |
| Simpson Strong-Tie Titen HD screw anchor THD25178H | 1⅝ | (2) ¼" x 1⅞" | 3,000 | $F_1$ | 335 | 240 | 280 |
| | | | | $F_2$ and $F_3$ | 660 | 630 | 550 |
| | | | 4,000 | $F_1$ | 390 | 280 | 325 |
| | | | | $F_2$ and $F_3$ | 760 | 725 | 635 |
| Simpson Strong-Tie Titen HD screw anchor TDH25234H | 2½ | (2) ¼" x 2¾" | 3,000 | $F_1$ | 370 | 265 | 310 |
| | | | | $F_2$ and $F_3$ | 475 | 695 | 610 |
| | | | 4,000 | $F_1$ | 430 | 305 | 360 |
| | | | | $F_2$ and $F_3$ | 550 | 805 | 705 |

1. Allowable anchor capacities have been determined using ACI 318-14 Chapter 17 calculations with a minimum concrete compressive strength ($f'_c$) of 3,000 and 4,000 psi in normal-weight concrete. Tabulated values shall be multiplied by a factor ($\lambda_a$) of 0.6 for sand light-weight concrete.
2. Edge distance is assumed to be 1½", and end distance is 2⅝".
3. Load values are for group anchors based on ACI 318, condition B, load factors from ACI 318-14 Section 5.3, no supplement edge reinforcement, $\Psi_{c,V}$ = 1.0 for cracked concrete and periodic special inspection.
4. Allowable Stress Design (ASD) values were determined by multiplying calculated LRFD capacities by a conversion factor, Alpha ($\alpha$), of 0.70 for seismic load and 0.6 for wind loads. ASD values for other combinations may be determined using alternate conversion factors.
5. Tabulated allowable ASD loads for Wind and Seismic in SDC A&B are based on using wind conversion factors and may be increased by 1.17 for SDC A&B only.
6. Design loads shall include the over-strength factor per ASCE7 Section 12.4.3. For fasteners in exterior wall connection systems, $\Omega_o$ = 1.5 per Table 13.5-1.
7. Allowable loads for $F_1$ are based on the governing loading direction which is toward the end of slab.
8. For anchor subjected to both tension and shear loads, it shall be designed to satisfy following:
   - For $N_a / N_{all} \leq 0.2$, the full allowable load in shear is permitted.
   - For $V_a / V_{all} \leq 0.2$, the full allowable load in tension is permitted.
   - For all other cases: $N_a / N_{all} + V_a / V_{all} \leq 1.2$ where:
     $N_a$ = Applied ASD tension load
     $N_{all}$ = Allowable $F_2$ and $F_3$ load from the SC Allowable Anchorage Loads for Concrete table
     $V_a$ = Applied ASD shear load
     $V_{all}$ = Allowable $F_1$ load from the SC Allowable Anchorage Loads for Concrete table
9. Tabulated allowable loads are based on anchorage only. The capacity of the connection system shall be the minimum of the allowable anchorage load and the SC Allowable Connector Loads.

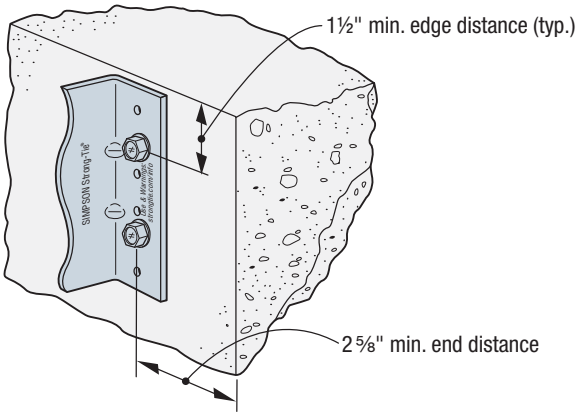


**Titen HD® Anchorage**

C-CF-2020 ©2020 SIMPSON STRONG-TIE COMPANY INC.

# **SSB** Bypass Framing Slide-Clip Strut Connector

The SSB connector is a versatile strut connector that is commonly used at the bottom of a steel beam to accommodate large stand-off conditions. It accommodates 1" of upward and 1" of downward movement.

**Material:** 54 mil (16 ga.)

**Finish:** Galvanized (G90)

**Installation:**

- Use the specified type and number of anchors.
- Use the specified number of XLSH34B1414 #14 shouldered screws (included). Install shouldered screws in the slots adjacent to the No-Equal stamp.
- Use a maximum of one screw per slot.
- If the SSB intrudes on interior space, it can be trimmed. The trimmed part shall allow an edge distance from the center of the nearest anchor to the end of the trimmed part of ½" or greater.

**Codes:** See p. 11 for Code Reference Key Chart

**Ordering Information:**

SSB3.518-KT contains:

- Box of 25 connectors
- (83) XLSH34B1414 #14 shouldered screws

**Note:** Replacement #14 shouldered screws for SSB connectors are XLSH34B1414-RP83.

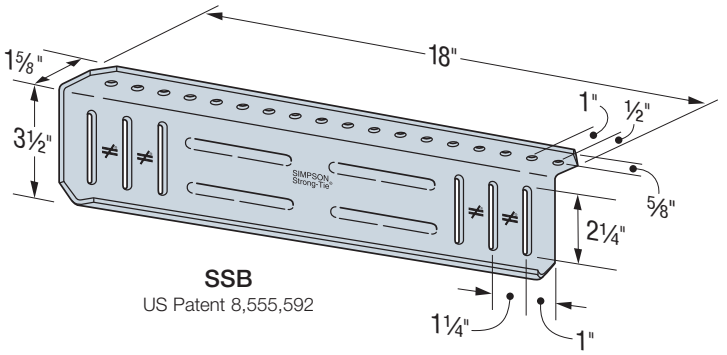


**SSB**
US Patent 8,555,592

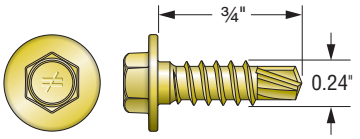


**XLSH34B1414**
**#14 Shouldered Screw**
**for Attachment to Stud Framing**
*(included)*

## SSB Allowable Connector Loads

| Model No. | Connector Material Thickness mil (ga.) | No. of #14 Shouldered Screws | Stud Thickness | | | | | | Code Ref. |
|---|---|---|---|---|---|---|---|---|---|
| | | | 33 mil (20 ga.) | | 43 mil (18 ga.) | | 54 mil (16 ga.) | | |
| | | | $F_2$ | $F_3$ | $F_2$ | $F_3$ | $F_2$ | $F_3$ | |
| SSB3.518 | 54 (16) | 2[1] | 520 | 520 | 690 | 690 | 1,075 | 960 | IBC, FL, LA |
| | | 3 | 815 | 815 | 1,030 | 1,080 | 1,335 | 1,225 | |

1. When the SSB connector is used with two shouldered screws, the screws may be installed in any two slots.
2. Allowable loads are based on clips installed with (3) #12–24 screws in the anchor leg. For other anchorage installations, the capacity of the connection system will be the minimum of the tabulated value and the allowable load from the SSB Allowable Anchorage Loads table on p. 39.
3. The maximum standoff for SSB with (2) screws and (3) screws is 12¼" and 11", respectively.

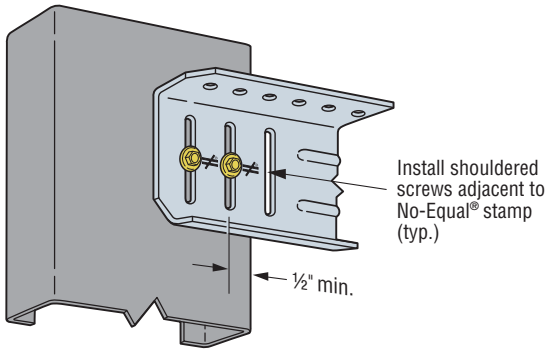


**SSB Installation with Two Shouldered Screws**

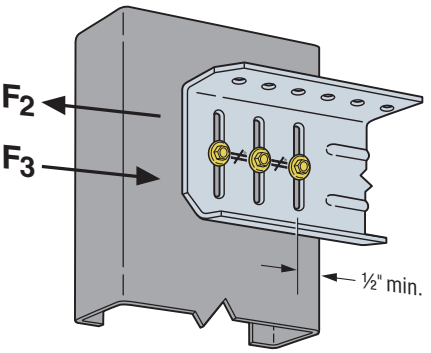


**SSB Installation with Three Shouldered Screws**

C-CF-2020 ©2020 SIMPSON STRONG-TIE COMPANY INC.

# **SSB** Bypass Framing Slide-Clip Strut Connector



## SSB Allowable Anchorage Loads

| Anchorage Type | No. of Anchors | Allowable Load $F_2$ and $F_3$ |
|---|---|---|
| #12–24 self-drilling screws | 2 | 1,250 |
| | 3 | 1,875 |
| Simpson Strong-Tie® 0.157" x ⅝" powder-actuated fasteners PDPAT-62KP | 2 | 820 |
| | 3 | 1,225 |
| Weld E70XX electrodes | Hard side: 2" Free side: 1" | 2,455 |

1. For additional important information, see General Information and Notes on p. 22.
2. Allowable loads are for clip anchorage only. The capacity of the connection system will be the minimum of the tabulated value and the allowable load from the SSB Allowable Connector Loads table on p. 38.

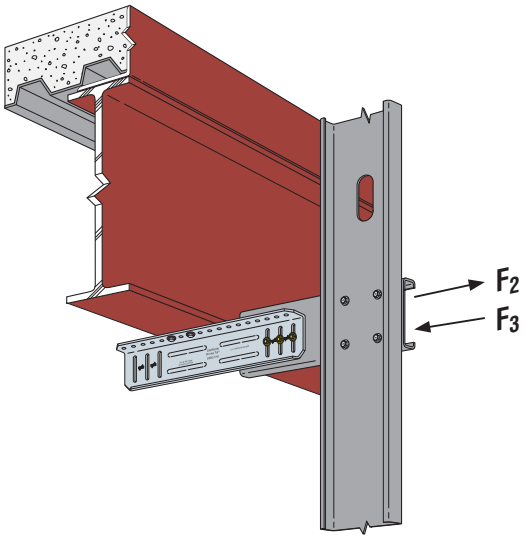


Typical SSB Installation with Stud Strut

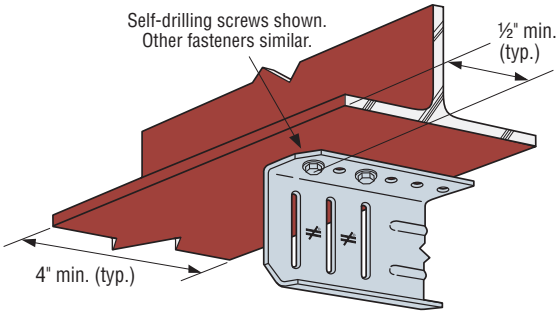


Two Anchors

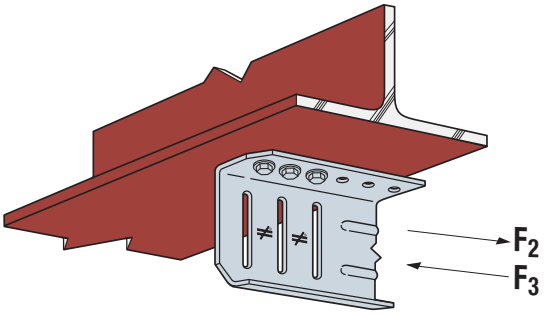


Three Anchors

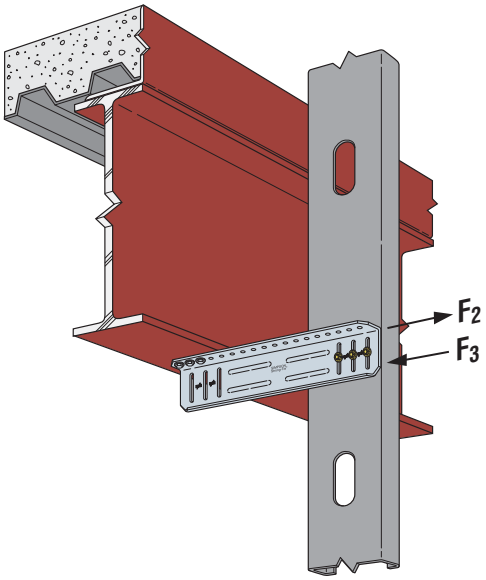


Typical SSB3.518 Installation

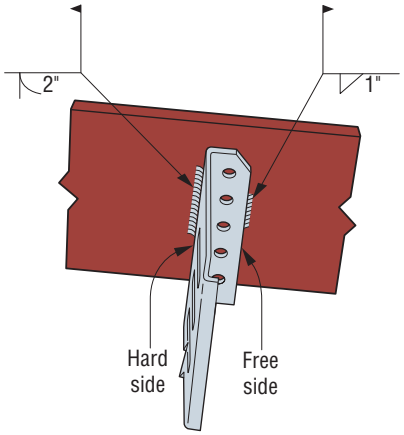


Weld

SSB Anchor Layout

C-CF-2020 ©2020 SIMPSON STRONG-TIE COMPANY INC.

# **HYS** Hybrid Strut

The HYS hybrid strut is the only CFS strut on the market designed and tested for use as either a slide or a rigid clip. Commonly used at the bottom of a steel beam to accommodate large standoff conditions, the HYS strut attaches to the structure with screws, powder-actuated fasteners or welds.

For installation as a slide connection, attach the HYS using shouldered screws through the slotted holes. Precision-manufactured shouldered screws provided with the HYS are designed to prevent over-driving and to ensure that the clip functions properly in the slide application. For installation as a rigid connection to support gravity and lateral loading, attach the clip using the small predrilled holes with #10 screws.

The HYS has undergone comprehensive component, assembly and anchor testing. Tabulated loads were developed from these tests and include capacities based on strength and deflection to assist in mitigating design risk. You can count on the HYS dual-application strut for its versatility and test-verified performance.

**Features:**

- Available in lengths of 12", 15", 24" and 30" (for 18" lengths, use SSB and FSB struts)
- Slots are positioned to minimize eccentric load and maximize capacity
- Slide application allows up to 1" of vertical moment in each direction when shouldered screws are used through the center of the slot
- Simpson Strong-Tie® No-Equal® stamps mark the center of the slots to help ensure correct placement of shouldered screws
- Supports gravity and lateral loads when using #10 screws through small predrilled holes

**Material:** HYS12/68, HYS15/68, HYS24/68 — 68 mil (14 ga.), 50 ksi
HYS30/97 — 97 mil (12 ga.), 40 ksi

**Finish:** Galvanized (G90)

**Codes:** See p. 11 for Code Reference Key Chart

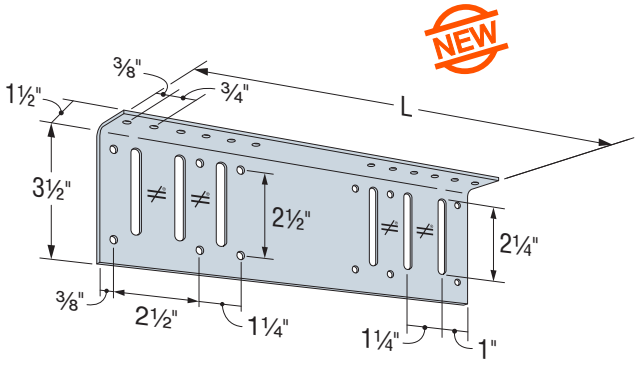


**HYS12/68**
*(HYS15/68 similar)*

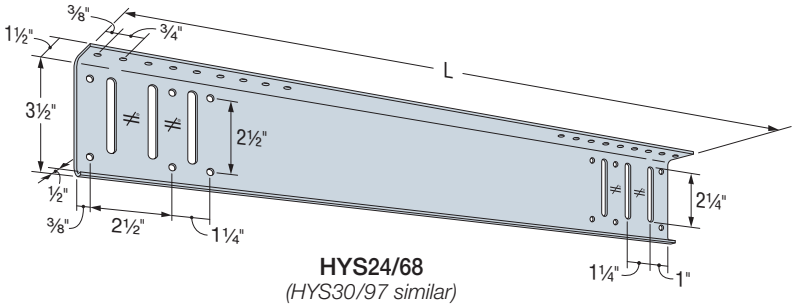


**HYS24/68**
*(HYS30/97 similar)*

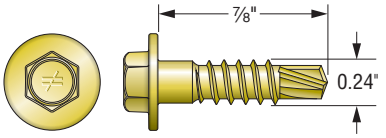


**XLSH78B1414**
**#14 Shouldered Screw for Attachment to Stud Framing Slide Application**
*(included)*

## Ordering Information and Dimensions

| Model No. | Ordering SKU | Length (in.) | Connectors | Shoulder Screws | Maximum Standoff (in.) | | |
|---|---|---|---|---|---|---|---|
| | | | | | Slip | | Fixed |
| | | | | | $S_1$ | $S_2$ | $R_1$ and $R_2$ |
| HYS12/68 | HYS12/68-R25 | 12 | 25 | 83 | 6⅞ | 5⅝ | 5 |
| HYS15/68 | HYS15/68-R25 | 15 | 25 | 83 | 9⅞ | 8⅝ | 8 |
| HYS24/68 | HYS24/68-R15 | 24 | 15 | 55 | 18⅞ | 17⅝ | 17 |
| HYS30/97 | HYS30/97-R10 | 30 | 10 | 55 | 24⅞ | 23⅝ | 23 |

1. Replacement of additional shoulder screws for HYS connectors in slide application are XLSH78B1414-RP83.
2. Maximum offsets are for two or three fasteners to primary structure. For four fasteners, reduce by ¾".

C-CF-2020 ©2020 SIMPSON STRONG-TIE COMPANY INC.

# **HYS** Hybrid Strut



## Slide-Clip Allowable Loads

| Model No. | Stud Thickness mil (ga.) | No. of #14 Shoulder Screws (Pattern) | Allowable Load (lb.) | | | Code Ref. |
|---|---|---|---|---|---|---|
| | | | In-Plane Load $F_1$ | Tension Load $F_2$ | Comp. Load $F_3$ | |
| HYS12/68 | 33 (20) | 2 (S1) | 100 | 520 | 520 | — |
| | | 3 (S2) | 100 | 815 | 815 | |
| HYS15/68 | | 2 (S1) | 100 | 520 | 520 | |
| | | 3 (S2) | 100 | 815 | 815 | |
| HYS24/68 | | 2 (S1) | 100 | 520 | 460 | |
| | | 3 (S2) | 100 | 815 | 690 | |
| HYS30/97 | | 2 (S1) | 100 | 520 | 530 | |
| | | 3 (S2) | 100 | 815 | 795 | |
| HYS12/68 | 43 (18) | 2 (S1) | 150 | 845 | 620 | |
| | | 3 (S2) | 150 | 1,285 | 1,260 | |
| HYS15/68 | | 2 (S1) | 150 | 845 | 620 | |
| | | 3 (S2) | 150 | 1,285 | 1,260 | |
| HYS24/68 | | 2 (S1) | 150 | 845 | 950 | |
| | | 3 (S2) | 150 | 1,285 | 1,420 | |
| HYS30/97 | | 2 (S1) | 150 | 845 | 1,100 | |
| | | 3 (S2) | 150 | 1,285 | 1,640 | |
| HYS12/68 | 54 (16) | 2 (S1) | 240 | 1,040 | 995 | |
| | | 3 (S2) | 240 | 1,585 | 1,550 | |
| HYS15/68 | | 2 (S1) | 240 | 1,040 | 995 | |
| | | 3 (S2) | 240 | 1,585 | 1,550 | |
| HYS24/68 | | 2 (S1) | 240 | 1,040 | 1,170 | |
| | | 3 (S2) | 240 | 1,585 | 1,755 | |
| HYS30/97 | | 2 (S1) | 240 | 1,040 | 1,355 | |
| | | 3 (S2) | 240 | 1,585 | 2,020 | |
| HYS12/68 | 68 (14) | 2 (S1) | 300 | 1,165 | 995 | |
| | | 3 (S2) | 300 | 1,775 | 1,550 | |
| HYS15/68 | | 2 (S1) | 300 | 1,165 | 995 | |
| | | 3 (S2) | 300 | 1,775 | 1,550 | |
| HYS24/68 | | 2 (S1) | 300 | 1,165 | 1,170 | |
| | | 3 (S2) | 300 | 1,775 | 1,755 | |
| HYS30/97 | | 2 (S1) | 300 | 1,520 | 1,520 | |
| | | 3 (S2) | 300 | 2,265 | 2,265 | |

1. For additional important information, see General Information and Notes on p. 22.
2. HYS Allowable Connector Loads are also limited by the HYS Anchorage Load table on p. 43. Use the minimum tabulated values from the connector and anchorage load tables as applicable.
3. See illustrations on the side for fastener placement to stud framing.
4. Tabulated $F_1$ loads are based on assembly tests with the load through the centerline of the stud. Tests are governed by fastener connections.

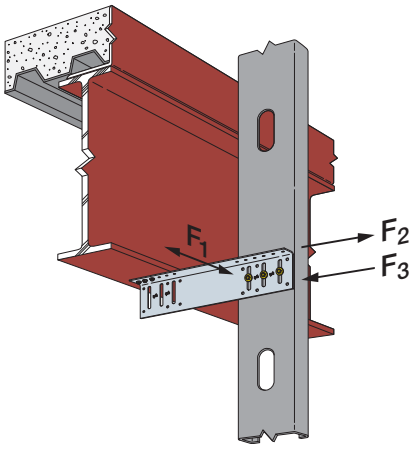


**Typical HYS Slide-Clip Application**

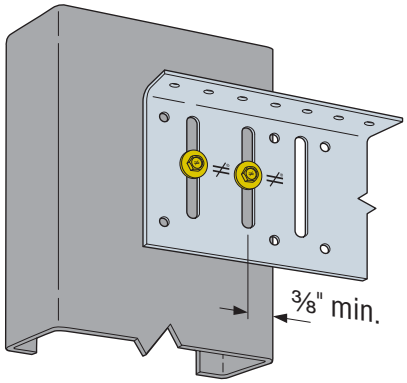


**Slide Screw Pattern S1**
*(no screws required in small round holes in slide application)*

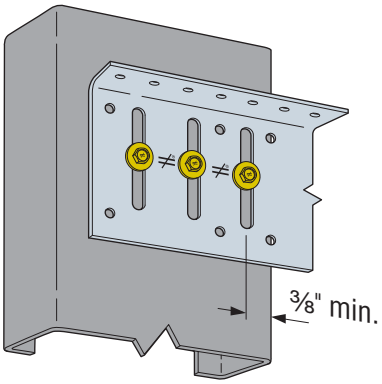


**Slide Screw Pattern S2**
*(no screws required in small round holes in slide application)*

C-CF-2020 ©2020 SIMPSON STRONG-TIE COMPANY INC.

# **HYS** Hybrid Strut

## Fixed-Clip Allowable Loads

| Model No. | Stud Thickness mil (ga.) | No. of #10 Screws (Pattern) | Allowable Load (lb.) | | | | Code Ref. |
|---|---|---|---|---|---|---|---|
| | | | In-Plane Load $F_1$ | Tension Load $F_2$ | Comp. Load $F_3$ | Shear Load $F_4$ | |
| HYS12/68 | 33 (20) | 4 (R1) | 100 | 705 | 705 | 365 | — |
| | | 6 (R2) | 110 | 1,060 | 1,060 | 365 | |
| HYS15/68 | | 4 (R1) | 100 | 705 | 705 | 340 | |
| | | 6 (R2) | 110 | 1,060 | 1,060 | 340 | |
| HYS24/68 | | 4 (R1) | 100 | 705 | 705 | 140 | |
| | | 6 (R2) | 110 | 1,060 | 1,060 | 175 | |
| HYS30/97 | | 4 (R1) | 100 | 705 | 705 | 135 | |
| | | 6 (R2) | 110 | 1,060 | 1,060 | 135 | |
| HYS12/68 | 43 (18) | 4 (R1) | 125 | 1,040 | 1,050 | 525 | |
| | | 6 (R2) | 155 | 1,520 | 1,580 | 525 | |
| HYS15/68 | | 4 (R1) | 125 | 1,040 | 1,050 | 445 | |
| | | 6 (R2) | 155 | 1,520 | 1,580 | 445 | |
| HYS24/68 | | 4 (R1) | 115 | 1,040 | 1,050 | 180 | |
| | | 6 (R2) | 125 | 1,520 | 1,580 | 230 | |
| HYS30/97 | | 4 (R1) | 115 | 1,045 | 1,050 | 175 | |
| | | 6 (R2) | 125 | 1,580 | 1,580 | 175 | |
| HYS12/68 | 54 (16) | 4 (R1) | 145 | 2,110 | 1,800 | 560 | |
| | | 6 (R2) | 285 | 3,085 | 1,800 | 710 | |
| HYS15/68 | | 4 (R1) | 145 | 2,110 | 2,135 | 560 | |
| | | 6 (R2) | 285 | 3,085 | 2,630 | 560 | |
| HYS24/68 | | 4 (R1) | 150 | 2,110 | 2,135 | 225 | |
| | | 6 (R2) | 165 | 3,085 | 2,315 | 290 | |
| HYS30/97 | | 4 (R1) | 150 | 2,125 | 2,135 | 220 | |
| | | 6 (R2) | 165 | 3,190 | 3,205 | 220 | |
| HYS12/68 | 68 (14) | 4 (R1) | 195 | 2,110 | 1,800 | 550 | |
| | | 6 (R2) | 385 | 3,085 | 1,800 | 710 | |
| HYS15/68 | | 4 (R1) | 195 | 2,110 | 2,160 | 560 | |
| | | 6 (R2) | 385 | 3,085 | 2,630 | 560 | |
| HYS24/68 | | 4 (R1) | 190 | 2,110 | 2,160 | 225 | |
| | | 6 (R2) | 210 | 3,085 | 2,315 | 290 | |
| HYS30/97 | | 4 (R1) | 190 | 2,125 | 2,160 | 220 | |
| | | 6 (R2) | 210 | 3,190 | 3,240 | 220 | |

1. For additional important information, see General Information and Notes on p. 22.
2. HYS Allowable Connector Loads are also limited by the HYS Anchorage Load table on p. 43. Use the minimum tabulated values from the connector and anchorage load tables as applicable.
3. See illustrations on the side for screw fastener placement to stud framing.
4. Tabulated $F_1$ loads are based on assembly tests with the load through the centerline of the stud. Tests are governed by fastener connections.
5. XLSH78B1414 #14 shouldered screw may be used to replace #10 screws in a fixed application.
6. Minimum stud width for fixed application is 6".

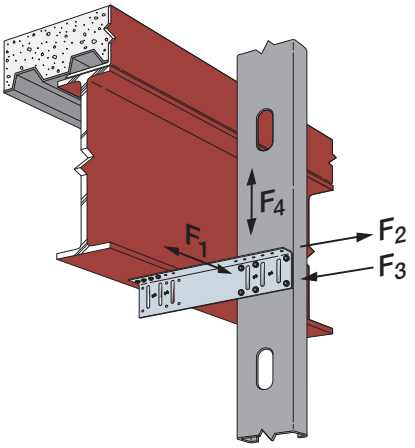


**Typical HYS Fixed-Clip Application**

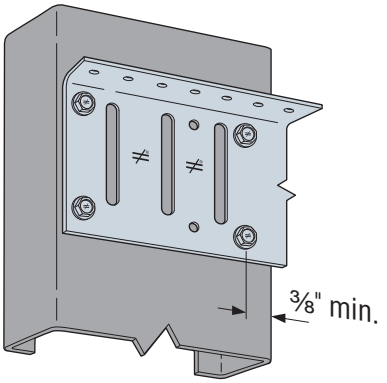


**Fixed Screw Pattern R1**
*(no screws required in slot in fixed application)*

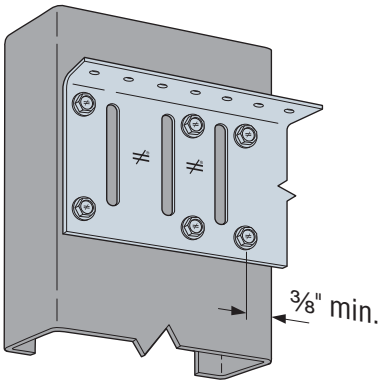


**Fixed Screw Pattern R2**
*(no screws required in slot in fixed application)*

C-CF-2020 ©2020 SIMPSON STRONG-TIE COMPANY INC.

# **HYS** Hybrid Strut



## HYS Allowable Anchorage Loads

| Anchorage Type | No. of Anchors | Allowable Load (lb.) | |
|---|---|---|---|
| | | $F_2$ and $F_3$ | $F_4$ |
| #12–24 self-drilling screws | 2 | 1,595 | 565 |
| | 3 | 2,395 | 845 |
| | 4 | 3,190 | 1,125 |
| Simpson Strong-Tie® 0.157" x ⅝" powder-actuated fasteners PDPAT-62KP | 2 | 820 | — |
| | 3 | 1,230 | 520 |
| | 4 | 1,640 | 780 |
| Weld E70XX electrodes | Hard side: 2" Free side: 1" | 2,455 | 1,125 |
| | Hard side: 4" Free side: 1" | 3,190 | 1,125 |

1. For additional important information, see General Information and Notes on p. 22.
2. Allowable loads are for the clip anchorage only. The capacity of the connection system will be the minimum of the tabulated value and the allowable load from the HYS Allowable Connector Loads on p. 41 for slide applications and p. 42 for fixed applications.

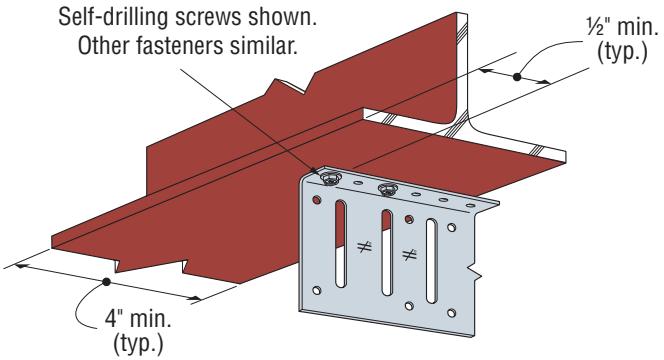


Two Anchors

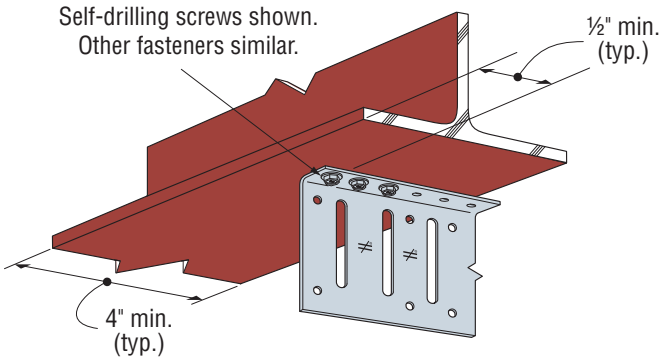


Three Anchors

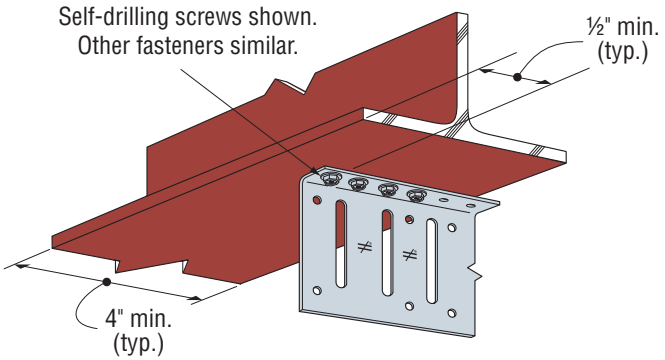


Four Anchors

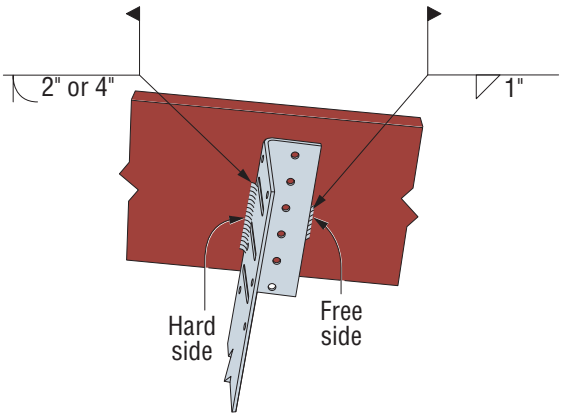


Weld

C-CF-2020 ©2020 SIMPSON STRONG-TIE COMPANY INC.

# **SCW** Head-of-Wall Slide-Clip Connector

The SCW connectors offer 1" of upward and 1" of downward movement. They are primarily used in head-of-wall applications that require vertical movement relative to the structure. SCW connectors are often used to strengthen window and door jambs for projects that utilize slip or slotted track.

**Material:** 54 mil (16 ga.)

**Finish:** Galvanized (G90)

**Installation:**

- Use the specified type and number of anchors.
- Use the specified number of #14 shouldered screws (included). Install shouldered screws in the slots adjacent to the No-Equal® stamp.
- Use a maximum of one screw per slot.

**Codes:** See p. 11 for Code Reference Key Chart

**Ordering Information:**

SCW3.25-KT contains:

- Box of 25 connectors
- 55 XLSH34B1414 #14 shouldered screws

SCW5.5-KT contains:

- Box of 25 connectors
- 83 XLSH34B1414 #14 shouldered screws

**Note:** Replacement #14 shouldered screws for SCW connectors are XLSH34B1414-RP83.

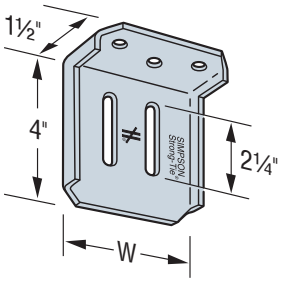


**SCW3.25**

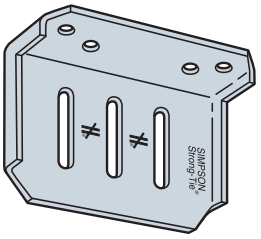

**SCW5.5**

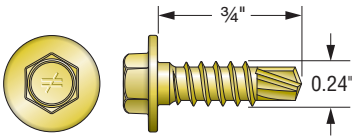


**XLSH34B1414**
**#14 Shouldered Screw for Attachment to Stud Framing**
*(included)*

## SCW Allowable Connector Loads

| Model No. | Connector Material Thickness mil (ga.) | W (in.) | No. of #14 Shouldered Screws | Stud Thickness 33 mil (20 ga.) $F_4$ | Stud Thickness 43 mil (18 ga.) $F_4$ | Stud Thickness 54 mil (16 ga.) $F_4$ | Code Ref. |
|---|---|---|---|---|---|---|---|
| SCW3.25 | 54 (16) | 3¼ | 2 | 455 | 630 | 755 | IBC, FL, LA |
| SCW5.5 | 54 (16) | 5½ | 2[1] | 455 | 630 | 995 | |
| | | | 3 | 455 | 630 | 1,220 | |

1. When the SCW5.5 connector is used with two shouldered screws, install screws in the outermost slots.
2. Allowable loads are based on clips installed with all holes in the anchor leg filled with #12–14 screws. For other anchorage installations, the capacity of the connection system will be the minimum of the tabulated value and the allowable load from the SCW Allowable Anchorage Loads table on p. 45.

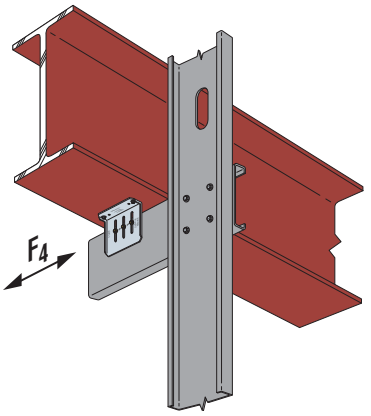


**Typical SCW Installation with Stud Strut**

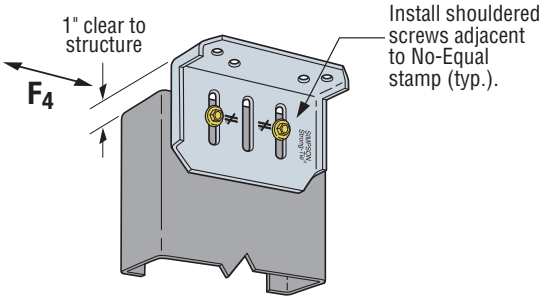


**SCW5.5 Installation with Two Shouldered Screws**
*(three shouldered screws and SCW3.25 similar)*

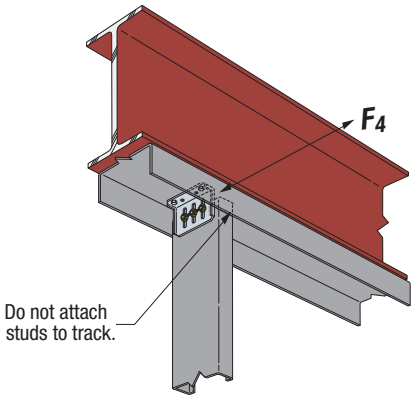


**Typical SCW Installation at Stud**

C-CF-2020 ©2020 SIMPSON STRONG-TIE COMPANY INC.

# **SCW** Head-of-Wall Slide-Clip Connector



## SCW Allowable Anchorage Loads (lb.)

| Model No. | Anchorage Type | Minimum Base Material | No. of Anchors | Allowable Load $F_4$ |
|---|---|---|---|---|
| SCW3.25 | #12–24 self-drilling screws | A36 steel 3⁄16" thick | 2 | 715 |
| | | | 3 | 1,075 |
| | Simpson Strong-Tie® 0.157" x ⅝" powder-actuated fasteners PDPAT-62KP | A36 steel 3⁄16" thick | 2 | 745 |
| | | | 3 | 1,120 |
| | Simpson Strong-Tie ¼" x 1¾" Titen® 2[3] | Concrete $f'_c$ = 2,500 psi | 2 | 325 |
| | | | 3 | 400 |
| SCW5.5 | #12–24 self-drilling screws | A36 steel 3⁄16" thick | 2 | 775 |
| | | | 4 | 1,550 |
| | Simpson Strong-Tie 0.157" x ⅝" powder-actuated fasteners PDPAT-62KP | A36 steel 3⁄16" thick | 2 | 745 |
| | | | 4 | 1,490 |
| | Simpson Strong-Tie ¼" x 1¾" Titen 2[3] | Concrete $f'_c$ = 2,500 psi | 2 | 325 |
| | | | 4 | 880 |

1. For additional important information, see General Information and Notes on p. 22.
2. Allowable loads are for clip anchorage only. The capacity of the connection system will be the minimum of the tabulated value and the allowable load from the SCW Allowable Connector Loads table on p. 44.
3. Tabulated values require a minimum 1½" end distance for masonry screws in concrete.
4. See *Fastening Systems* catalog (C-F-2019) on **strongtie.com** for more information on Simpson Strong-Tie fasteners.

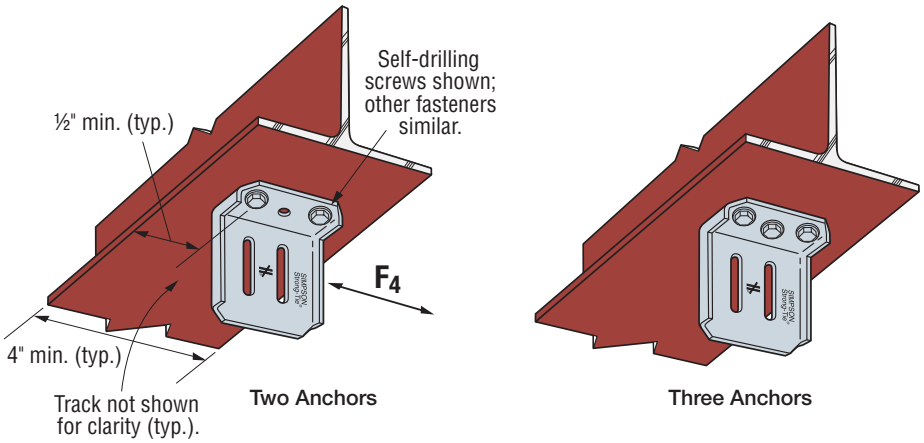


SCW3.25 Anchor Layout

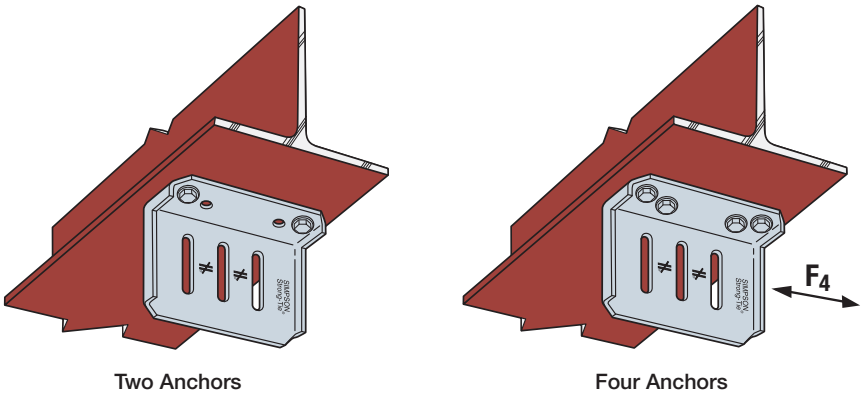


SCW5.5 Anchor Layout

C-CF-2020 ©2020 SIMPSON STRONG-TIE COMPANY INC.

# **DTC** Head-of-Wall Slide-Clip Application

DTC clips are a cost-effective solution for light-duty, head-of-wall slide clip applications. The 1⅝" slot will allow ¾" movement in each direction.

**Material:** 43 mil (18 ga.)

**Finish:** Galvanized (G90)

**Installation:**

- Use specified type and number of anchors per the installation drawing below
- Install (2) #8 screws centered in the vertical slots
- Once tightened, back-out screws ½ turn to ensure slip

**Codes:** See p. 11 for Code Reference Key Chart

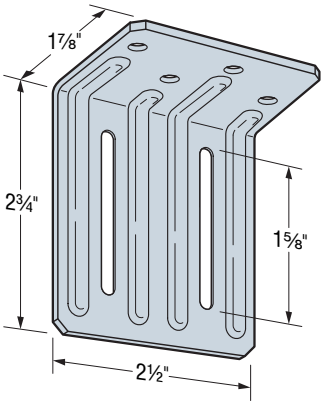


**DTC**

| Model No. | Connector Material mil (ga.) | Fasteners | Anchorage | Stud Thickness mil (ga.) | Stud Steel Strength $F_y$ (ksi) | Allowable Load $F_4$ | Code Ref. |
|---|---|---|---|---|---|---|---|
| DTC | 43 (18) | (2) #8 self-drilling screws[4] | (2) 0.157" PDPAT powder-actuated fasteners or (2) #12 self-drilling screws[4] | 15 (25 EQ) | 50 | 60 | IBC, FL, LA |
| | | | | 18 (25) | 33 | 70 | |
| | | | | 19 (20 EQ) | 65 | 80 | |
| | | | | 20 (20 EQ) | 57 | | |
| | | | | 30 (20 DW) | 33 | 165 | |
| | | | | 33 (20 STR) | 33 | 170 | |
| | | | | 43 (18) | 33 | 215 | |

1. Allowable loads may not be increased for wind or seismic load.
2. Clips do not replace stud lateral or stability bracing. Design of bracing is the responsibility of the designer.
3. It is the responsibility of the designer to verify the adequacy of the stud. Allowable loads are based on clips installed an adequate distance away from penetrations, notches, ends of studs and other conditions that may affect the clip performance.
4. See *Fastening Systems* catalog (C-F-2019) on **strongtie.com** for more information on Simpson Strong-Tie fasteners.

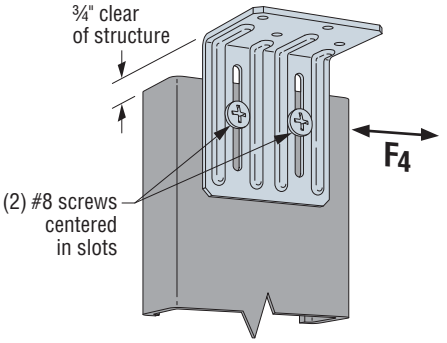


**Typical DTC Screw Installation**

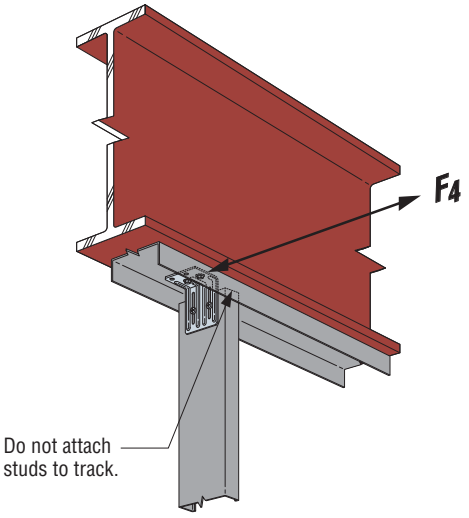


**Typical DTC Installation at Stud**

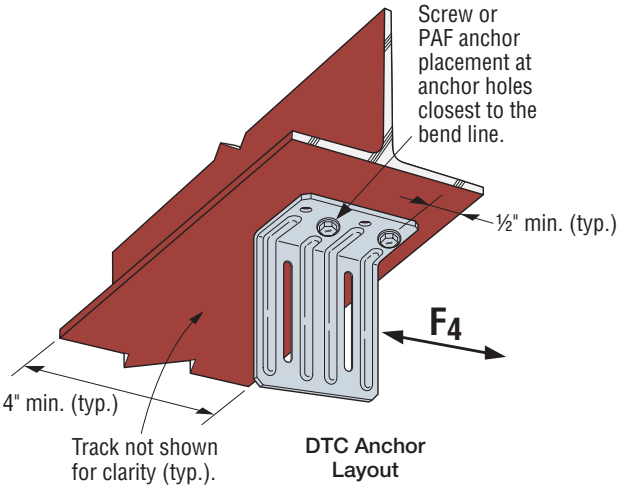


**DTC Anchor Layout**

C-CF-2020 ©2020 SIMPSON STRONG-TIE COMPANY INC.

# **SCHA** Slide-Clip Connectors for Horizontal Anchorage



***This product is preferable to similar connectors because of a) easier installation, b) higher loads, c) lower installed cost, or a combination of these features.***

SCHA connectors are an ideal solution for panelized or stick-frame construction where the CFS framing anchors to the top of a concrete floor slab or the bottom of a steel beam. The connector features a wide support leg to decrease eccentricity on anchors and provide a variety of anchorage options. The included SCVC vertical slider helps to strengthen the connector for the highest tension ($F_2$) and compression ($F_3$) loads in the industry.

**Features:**

- Provides a full 1" of both upward and downward movement
- Tabulated design values for anchorage help mitigate risk and provide ease of specification
- Either face of anchorage leg can be used against the support
- Accommodates stand-off distances up to 4¾"
- Can be used with 3⅝", 4", 6" and 8" studs
- Prepunched anchor holes accommodate ¼"-diameter Titen HD® or other ¼"-diameter concrete screw anchors, and 0.157"-diameter powder-actuated fasteners such as the Simpson Strong-Tie® PDPAT-62KP
- Prepunched anchor holes also eliminate the need for pre-drilling and help ensure accurate anchor placement

**Material:** SCHA —118 mil (10 ga., 33 ksi); SCVS — 97 mil (12 ga., 33 ksi)

**Coating:** Galvanized (G90)

**Installation:**

- Use all specified fasteners and anchors. Note that the smaller diameter anchor holes are provided for PAF installation, and the larger diameter anchor holes are for ¼"-diameter concrete screw anchors.
- Ensure that the SCVS vertical slider is centered in the SCHA vertical slots by aligning the tic-marks adjacent to the triangle holes on the slider with the ≠ stamp on the SCHA clip.

**Codes:** See p. 11 for Code Reference Key Chart

**Ordering Information:**

- SCHA10.75-KT15 contains (15) SCHA10.75 connectors and (15) SCVS/97 sliders
- SCHA10.75L-KT15 contains (15) SCHA10.75L connectors and (15) SCVS/97 sliders

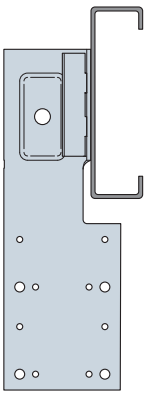

**SCHA10.75**
*(plan view with vertical leg up)*

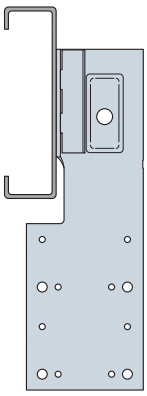

**SCHA10.75L**
*(plan view with vertical leg up)*

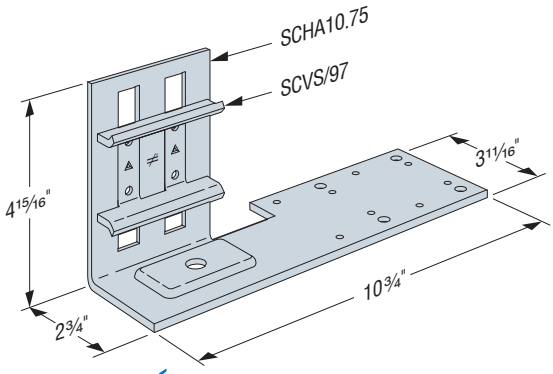


**SCHA10.75 with SCVS/97**
US Patent Pending

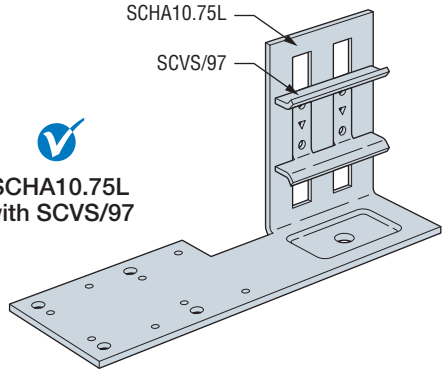


**SCHA10.75L with SCVS/97**

## SCHA Anchorage Types and Conditions

| Four PDPAT Anchors to Steel | |
|---|---|
| Front Condition | End Condition |
| 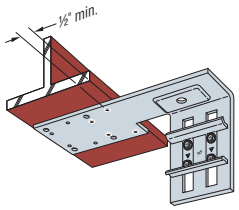  | 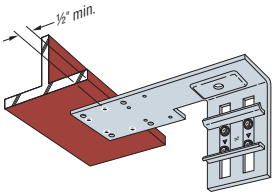  |
| **4" Weld** | |
| Front Condition | End Condition |
| 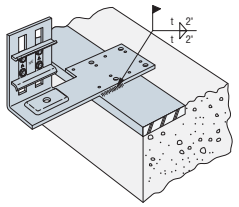  | 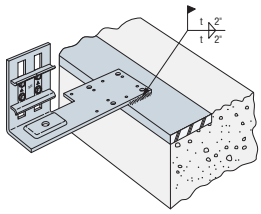  |
| **¼"-Diameter Concrete Screws** | |
| Four Anchors | Two Anchors |
| 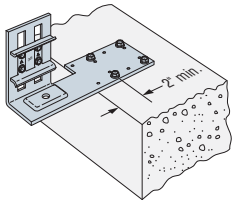  | 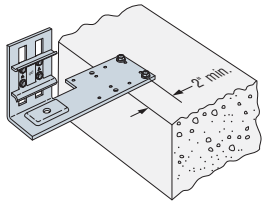  |

C-CF-2020 ©2020 SIMPSON STRONG-TIE COMPANY INC.

# **SCHA** Slide-Clip Connectors for Horizontal Anchorage

SIMPSON Strong-Tie®

## SCHA Allowable Loads

| Primary Structure Base Material | Anchorage | | Fasteners to Stud Self-Drilling Screws | | Stud Thickness mil (ga.) | Maximum Stand-Off Distance (in.) | Allowable Load (lb.) | | | Code Ref. |
|---|---|---|---|---|---|---|---|---|---|---|
| | Qty./Type/Size | Condition | Min./ Max. | No. #12–14 | | | $F_1$[7] | $F_2$ | $F_3$ | |
| Structural steel A36 3/16" thick minimum | (4) 0.157" x 5/8" powder-actuated fasteners PDPAT-62KP or (2) welds – 2" length | Front condition | Min. | 4 | 33 (20) | 2 | 150 | 645 | 490 | — |
| | | | | | 43 (18) | | 195 | 860 | 610 | |
| | | | | | 54 (16) | | 235 | 990 | 880 | |
| | | | | | 68 (14) | | 235 | 990 | 880 | |
| | | | Max. | 6 | 54 (16) | 2 | 350 | 1,300 | 1,045 | |
| | | | | | 68 (14) | | 350 | 1,495 | 1,045 | |
| | | End condition | Min. | 4 | 33 (20) | 4¾ | 105 | 625 | 470 | |
| | | | | | 43 (18) | | 110 | 830 | 570 | |
| | | | | | 54 (16) | | 165 | 830 | 720 | |
| | | | | | 68 (14) | | 165 | 830 | 720 | |
| | | | Max. | 6 | 54 (16) | 4¾ | 350 | 1,060 | 775 | |
| | | | | | 68 (14) | | 350 | 1,060 | 775 | |
| Normal or lightweight concrete $f'_c$ = 2,500 psi minimum | (4) concrete screw anchors – 1/4" diameter[3] | 4 anchors | Min. | 4 | 33 (20) | 2 | 105 | 625 | 470 | |
| | | | | | 43 (18) | | 110 | 830 | 570 | |
| | | | | | 54 (16) | | 165 | 830 | 720 | |
| | | | | | 68 (14) | | 165 | 830 | 720 | |
| | | | Max. | 6 | 54 (16) | 2 | 350 | 1,060 | 775 | |
| | | | | | 68 (14) | | 350 | 1,060 | 775 | |
| | (2) concrete screw anchors – 1/4" diameter[3] | 2 anchors | Min. | 4 | 33 (20) | 4¾ | 105 | 625 | 470 | |
| | | | | | 43 (18) | | 105 | 830 | 570 | |
| | | | | | 54 (16) | | 165 | 830 | 720 | |
| | | | | | 68 (14) | | 165 | 830 | 720 | |
| | | | Max. | 6 | 54 (16) | 4¾ | 350 | 860 | 745 | |
| | | | | | 68 (14) | | 350 | 860 | 745 | |

1. For additional important information, see General Information and Notes on p. 22.
2. Allowable loads are based on connectors installed with tabulated anchorage type, quantity and size into structural steel. For anchorage installations into concrete, the capacity of the connection system will be the minimum of the tabulated value and the allowable load using concrete screws indicated on the table on p. 49. Note that if the designer chooses to calculate concrete anchorage with alternate 1/4"-diameter anchors, then the maximum load shall not exceed the tabulated values in this table. Refer to the figures on p. 47 for anchorage conditions.
3. Please refer to the table on p. 49 for Simpson Strong-Tie® Titen HD anchorage loads.
4. Min. fasteners quantity and tabulated values — fill round holes; max. fasteners quantity and tabulated values — fill round and triangular holes.
5. The stand-off is the distance from the interior flange of the stud to the face of the supporting structure. Note that the interior flange of the stud is assumed to align with the inside vertical edge of the connector as indicated in the illustrations on p. 49.
6. Tabulated values are based on 3 5/8" studs. Web crippling checks for deeper members are the responsibility of the designer.
7. Tabulated $F_1$ loads are based on assembly tests with the load through the centerline of stud. Tested failure modes were due to screw pullout; therefore compare $F_1$ against $F_p$ calculated per ASCE 7-10 Chapter 13 with $a_p$ = 1.25 and $R_p$ = 1.0.

C-CF-2020 ©2020 SIMPSON STRONG-TIE COMPANY INC.

# **SCHA** Slide-Clip Connectors for Horizontal Anchorage



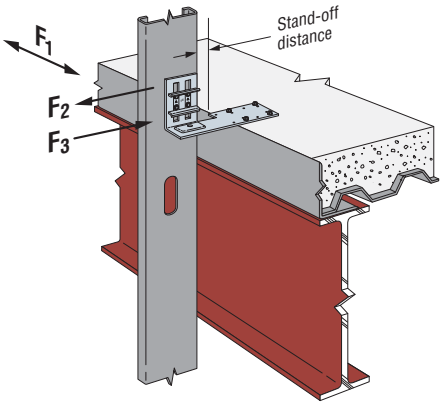


**Typical SCHA Installation at Floor Slab**

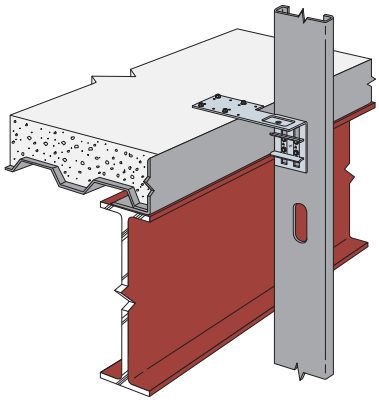

**Typical SCHA Installation at Floor Slab** *(inverted)*

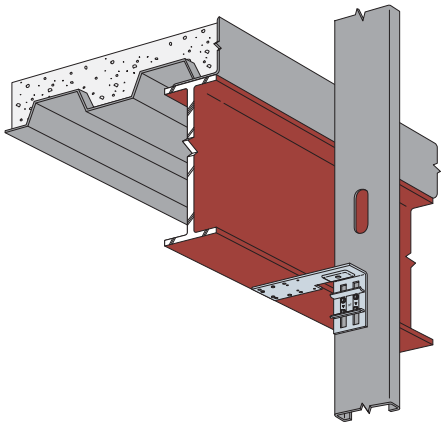

**Typical SCHA Installation at Beam Flange**

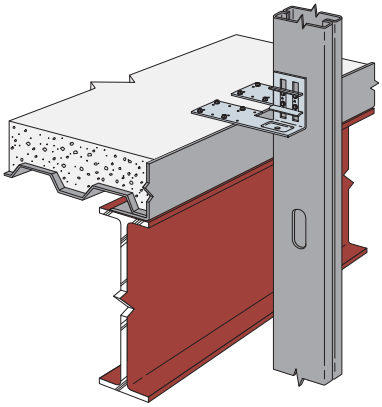

**Typical SCHA Installation for Built-Up Studs at Floor Slab** *(SCHA10.75L near side and SCHA10.75 far side)*

## Allowable Titen HD® Anchorage Loads into Concrete with SCHA Clip

| Anchorage Type | Nominal Embedment (in.) | Anchors Quantity and Size | f'c (psi) | Allowable Anchor Load (lb.) $F_2$ and $F_3$ | | | |
|---|---|---|---|---|---|---|---|
| | | | | Wind and Seismic in SDC A&B | | Seismic in SDC C through F | |
| | | | | Uncracked Concrete | Cracked Concrete | Cracked Concrete ($\Omega$ = 1.0) | Cracked Concrete[7] ($\Omega$ = 2.5) |
| Simpson Strong-Tie® Titen HD screw anchor THDB25178H | 1⅝ | (4) ¼" x 1⅞" | 2,500 | 1,025 | 730 | 855 | 350 |
| | 1⅝ | (2) ¼" x 1⅞" | 2,500 | 510 | 365 | 425 | 175 |

1. Allowable anchor capacities have been determined using ACI 318-14 Chapter 17 calculations with a minimum concrete compressive strength ($f'_c$) of 2,500 psi and 5" slab thickness in normal-weight concrete. Tabulated values can be multiplied by a factor ($\lambda_a$) of 0.6 for sand-lightweight concrete.
2. Nominal Embedment Depth/Effective Embedment Depth relationship is 1.75" ($h_{nom}$) / 1.30" ($h_{ef}$).
3. Edge distance is assumed to be 2", and end distance is 7⅛".
4. Load values are for group anchors based on ACI 318-14, condition B, load factors from ACI 318-14 Section 5.3, no supplement edge reinforcement, $\Psi_{c,V}$ = 1.0 for cracked concrete and periodic special inspection.
5. Allowable Stress Design (ASD) values were determined by multiplying calculated LRFD capacities by a conversion factor, Alpha ($\alpha$), of 0.70 for seismic load and 0.6 for wind loads. ASD values for other combinations may be determined using alternate conversion factors.
6. Tabulated allowable ASD loads for Wind and Seismic in SDC A&B are based on using wind conversion factors and may be increased by 1.17 for SDC A&B only.
7. Allowable loads have been divided by an Omega ($\Omega$) seismic factor of 2.5 for brittle failure as required by ACI 318-14 Chapter 17.
8. Allowable $F_2$ and $F_3$ loads are based on the governing loading direction, which is toward the edge of slab.
9. Tabulated capacities are based on maximum allowable anchorage loads only. The capacity of the connection system shall be the minimum of the tabulated value and the SCHA Allowable Connector Loads.

C-CF-2020 ©2020 SIMPSON STRONG-TIE COMPANY INC.

# Drift Clips

# **IDCB** Drift-Clip Bypass Framing Connector



The IDCB drift-clip connector is used to secure bypass stud framing to the edge of a slab. The connector will accommodate 1" of lateral drift in each direction and 1" of upward and downward vertical deflection. Tested load values are provided for anchorage to a steel-edge angle using #12 x 1¼" Strong-Drive® XL Large-Head Metal screws.

**Features:**

- Horizontal embossments and corner gussets optimize performance in the $F_2$ load direction
- Precision-manufactured shouldered screws provided with the IDCB connector are designed to prevent overdriving and to ensure that the clip functions properly
- Simpson Strong-Tie® No-Equal stamps mark the center of the slots to help ensure correct shouldered screw and anchor placement

**Material:** 97 mil (12 ga.), 50 ksi

**Coating:** Galvanized (G90)

**Installation:**

- Use the specified type and number of fasteners and anchors.
- In the vertical slots, use the specified number of #14 shouldered screws (included) for attachment to the stud. Install screws to align with the No-Equal stamp.
- For attachment to a minimum 3⁄16"- and maximum ½"-thick steel edge angle, use Simpson Strong-Tie® Strong-Drive XL Large-Head Metal screws (XLQ114B1224). Use one screw centered in each horizontal slot. Install screws to align with the No-Equal® stamp and back out ½ turn.
- For fastener installation into steel backed by concrete, predrilling of both the steel and the concrete may be required. For predrilling, use a maximum 3⁄16"-diameter drill bit.

**Codes:** See p. 11 for Code Reference Key Chart

**Ordering Information:**

IDCB45.5-KT25 contains (25) IDCB45.5 connectors and (83) XLSH78B1414 #14 shouldered screws

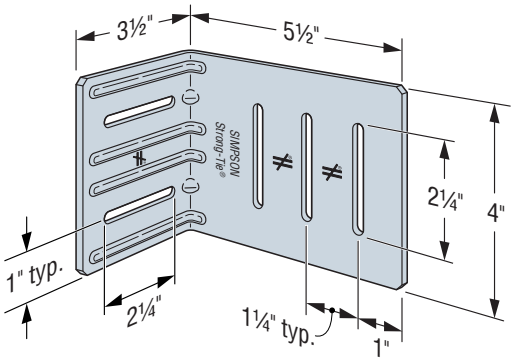


**IDCB45.5**

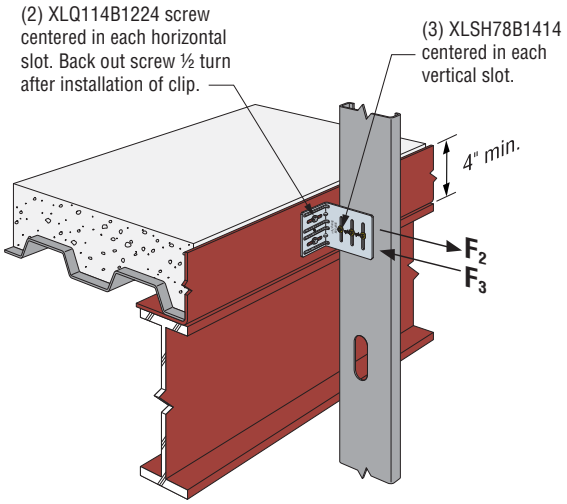


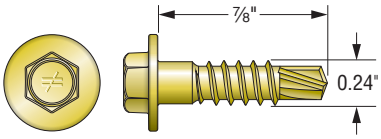


**XLSH78B1414**
**#14 Shouldered Screw for Attachment to Stud Framing**
*(included)*

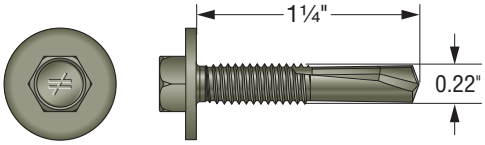


**XLQ114B1224 Screw for Anchorage to Steel Edge Angle**
*(sold separately)*

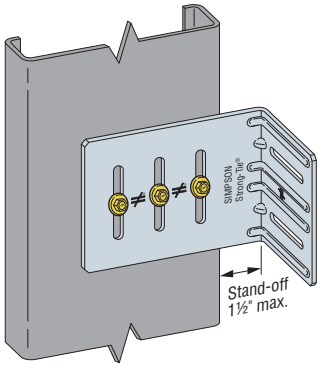


**Stand-Off Distance**

## IDCB45.5 Connector Loads

| Model No. | No. of #14 Shouldered Screws[1] | No. of #12 XLQ Screw Anchors[2] | Load Direction | Stud Thickness mil (ga.) | Strength[3] (lb.) | | Service Limit[3] (lb.) | | Code Ref. |
|---|---|---|---|---|---|---|---|---|---|
| | | | | | ASD | LRFD | ⅛" Deformation | 3⁄16" Deformation | |
| IDCB45.5 | 3 | 2 | $F_2$ and $F_3$ | 33 mil (20 ga.) | 600 | 900 | 410 | 650 | — |
| | | | | 43 mil (18 ga.) | 680 | 1,060 | 455 | 695 | |
| | | | | 54 mil (16 ga.) | 760 | 1,220 | 500 | 745 | |

1. #14 x ⅞" shouldered screw (model no. "XLSH78B1414") provided with the clips are ASTM C1513 compliant.
2. For additional information on the #12 XL screw (model no. "XLQ114B1224") refer to **strongtie.com**.
3. The capacity of the connection will be the minimum of Strength Load and applicable Service Limit Load as determined by the designer.
4. See additional important General Information and Notes on p. 22.

C-CF-2020 ©2020 SIMPSON STRONG-TIE COMPANY INC.

# **DSSCB** Bypass Framing Drift Strut Connector

SIMPSON Strong-Tie®



***This product is preferable to similar connectors because of a) easier installation, b) higher loads, c) lower installed cost, or a combination of these features.***

The solution to accommodate building drift, the DSSCB, is used to support cold-formed steel bypass framing to the edge of a floor slab. The DSSCB also simplifies installation by allowing installers for panelized construction to install finished panels while working off the top of the slab without the need to predrill or preinstall anchors for each clip. It also eliminates the coordination difficulties associated with pre-anchorage of standard bypass clips. With prepunched slots and round holes, the DSSCB is a dual-function connector that can be used for slide-clip and fixed-clip applications.

**Features:**

- The clips come in lengths of 3½", 6" and 8".
- Prepunched slots provide a full 1" of both upward and downward deflection.
- Precision-manufactured shouldered screws, provided with DSSCB connectors, are designed to prevent overdriving and to ensure the clip functions properly.
- Works with 13⁄16" and 1⅝" strut channels as given in the accompanying figures. Common manufactured brands are Unistrut®, PHD and B-Line. Struts are not supplied by Simpson Strong-Tie.
- The maximum slide-clip standoff distance is 3 1⁄16" for 13⁄16" struts, 3⅞" for 1⅝" struts and 2¼" for concrete inserts.
- Depending on the application and the designer's specifications, struts can be either mechanically anchored, welded or cast in place.
- Pre-engineered design solutions are provided for channel strut anchorage.
- Tabulated design values are based on assembly testing to mitigate risk for designers, engineers and architects.
- Optional pre-cast concrete inserts for flush mounting.
- Optional drift stopper, DSHS, for clip alignment flexibility (where drift not required).

**Material:** DSSCB — 97 mil (12 ga.), 50 ksi;
DSHS — 97 mil (12 ga.), 33 ksi

**Finish:** Galvanized (G90)

**Codes:** See p. 11 for Code Reference Key Chart.

**Ordering Information:**
The DSSCB43.5-KT25, DSSCB46-KT25 and DSSCB48-KT25 contain 25 connectors and enough shouldered screws for installation. The DSHS-R100 contains 100 connectors.

**Note:** Replacement #14 shouldered screws for DSSCB connectors are the XLSH78B1414-RP83.

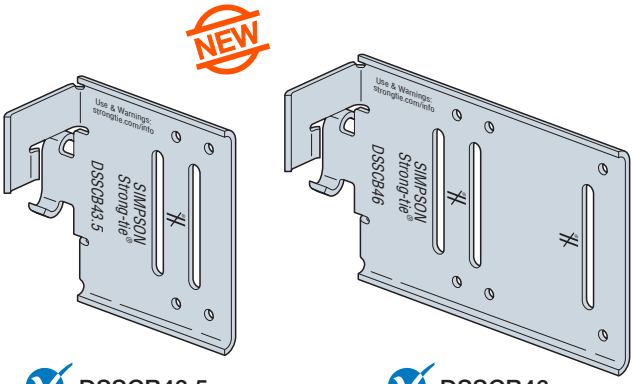


DSSCB43.5 DSSCB46

US Patent Pending

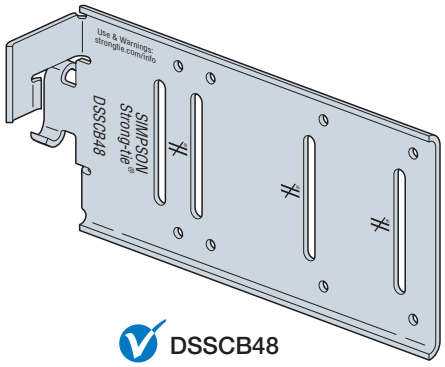


DSSCB48

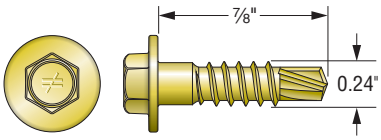


**XLSH78B1414**
**#14 Shouldered Screw for Attachment to Stud Framing**
*(included)*

C-CF-2020 ©2020 SIMPSON STRONG-TIE COMPANY INC.

# **DSSCB** Bypass Framing Drift Strut Connector



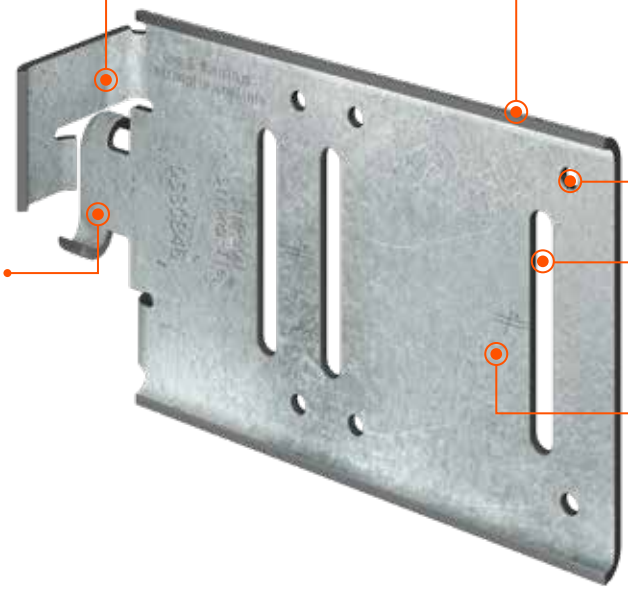

**Squaring flange**
helps the clip stay square with the strut

**Unique formed insert**
works with standard 13⁄16" and 1⅝"-deep, 12-gauge strut, minimizes friction, and allows an easy twist-in installation

**Stiffened edges and heavy 12-gauge construction**
provide jobsite durability and superior tabulated loads

**Dual-function clips**
can be used for either deflection or fixed conditions

**No-Equal stamp**
marks the center of the slots to help ensure correct shouldered-screw placement

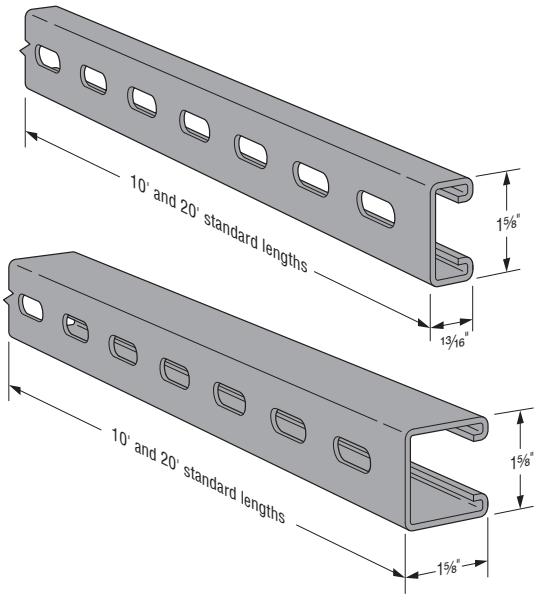


**The Simpson Strong-Tie DSSCB works with 12-gauge standard strut channels (not sold by Simpson Strong-Tie). See p. 60 for strut requirements and p. 61 for concrete insert requirements. See p. 58 for model numbers and capacities.**

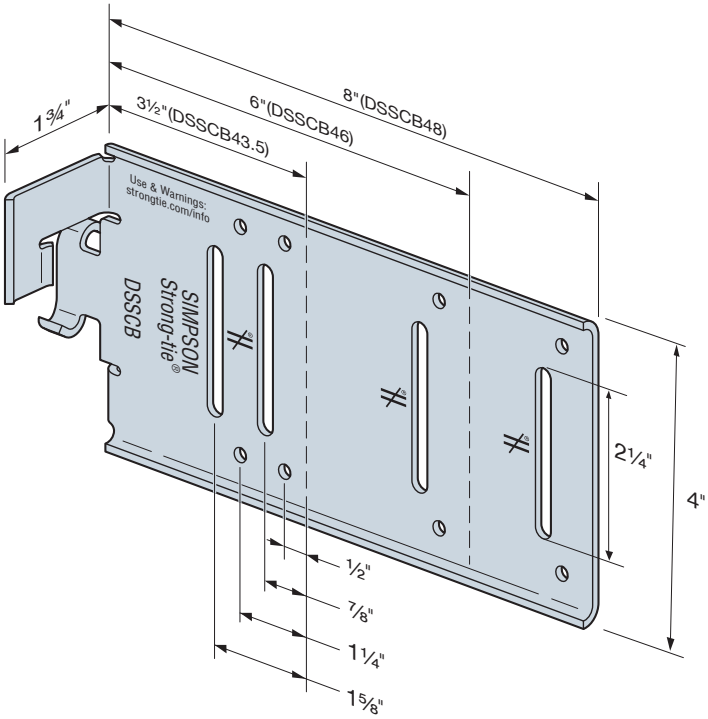


**DSSCB Dimensions**
U.S. Patent Pending

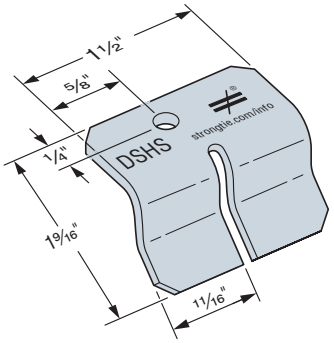


**DSHS used to prevent horizontal sliding when needed**
*(sold separately)*

C-CF-2020 ©2020 SIMPSON STRONG-TIE COMPANY INC.

# **DSSCB** Bypass Framing Drift Strut Connector



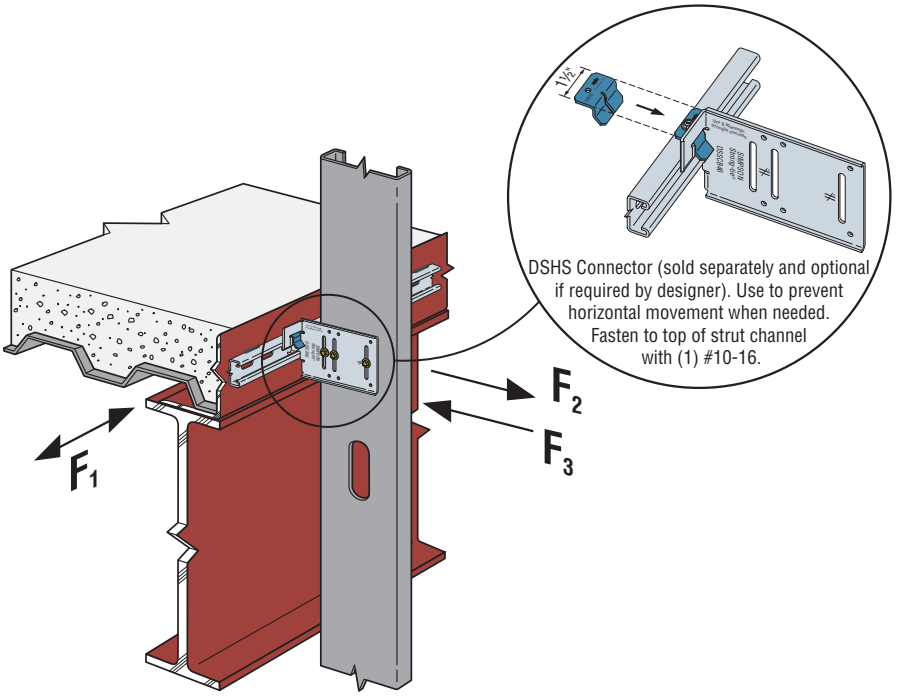


Typical DSSCB Installation
Slide-Clip Application

## DSSCB Screw Patterns (Slide-Clip Applications)

| Model | Pattern A |
|---|---|
| DSSCB43.5 | 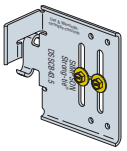 |

| Model | Pattern B | Pattern C | Pattern D |
|---|---|---|---|
| DSSCB46 | 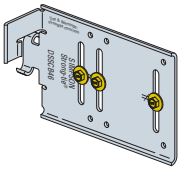 | 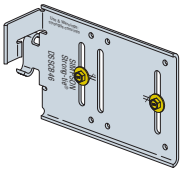 | 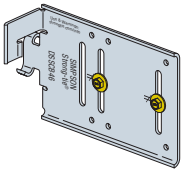 |

| Model | Pattern E | Pattern F | Pattern G |
|---|---|---|---|
| DSSCB48 | 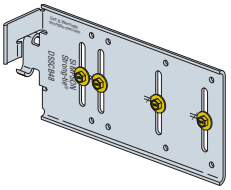 | 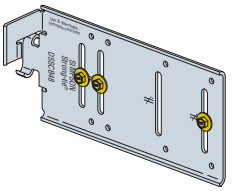 | 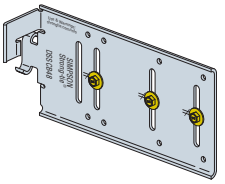 |

C-CF-2020 ©2020 SIMPSON STRONG-TIE COMPANY INC.

# **DSSCB** Bypass Framing Drift Strut Connector



## DSSCB Allowable Slide-Clip Connector Loads

| Model No. | Stud Thickness mil (ga.) | Fasteners to Stud | | Allowable Load (lb.) | | | Code Ref. |
|---|---|---|---|---|---|---|---|
| | | Screw Pattern | No. of #14 Shouldered Screws | $F_1$ | $F_2$ | $F_3$ | |
| DSSCB43.5 | 33 (20) | A | 2 | 105 | 515 | 615 | IBC, LA |
| DSSCB46 | | B | 3 | 105 | 765 | 920 | |
| | | C, D | 2 | 105 | 515 | 615 | |
| DSSCB48 | | E | 4 | 105 | 765 | 1,225 | |
| | | F, G | 3 | 105 | 765 | 920 | |
| DSSCB43.5 | 43 (18) | A | 2 | 155 | 785 | 940 | |
| DSSCB46 | | B | 3 | 155 | 1,175 | 1,410 | |
| | | C, D | 2 | 155 | 785 | 940 | |
| DSSCB48 | | E | 4 | 155 | 1,175 | 1,880 | |
| | | F, G | 3 | 155 | 1,175 | 1,410 | |
| DSSCB43.5 | 54 (16) | A | 2 | 225 | 1,160 | 1,345 | |
| DSSCB46 | | B | 3 | 225 | 1,475 | 2,020 | |
| | | C, D | 2 | 225 | 1,160 | 1,280 | |
| DSSCB48 | | E | 4 | 225 | 1,475 | 2,445 | |
| | | F, G | 3 | 225 | 1,475 | 1,965 | |
| DSSCB43.5 | 68 (14) and 97 (12) | A | 2 | 300 | 1,160 | 1,770 | |
| DSSCB46 | | B | 3 | 300 | 1,475 | 2,675 | |
| | | C, D | 2 | 300 | 1,460 | 1,685 | |
| DSSCB48 | | E | 4 | 300 | 1,475 | 2,675 | |
| | | F, G | 3 | 300 | 1,475 | 2,600 | |

1. For additional information, see General Information and Notes on p. 22.
2. DSSCB Allowable Slide-Clip Connector Loads are also limited by the Strut Channel Allowable Anchorage Load to Steel table on p. 58 or Concrete Insert Allowable Load Embedded to Concrete on p. 59. Use the minimum tabulated values from the connector and anchorage load tables as applicable.
3. See illustrations on p. 54 for shouldered screw fastener pattern placement to stud framing.
4. Tabulated $F_1$ loads are based on assembly tests with the load through the centerline of the stud. $F_1$ loads require DSHS connector with (1) #10 screw to strut.

C-CF-2020 ©2020 SIMPSON STRONG-TIE COMPANY INC.

# **DSSCB** Bypass Framing Drift Strut Connector



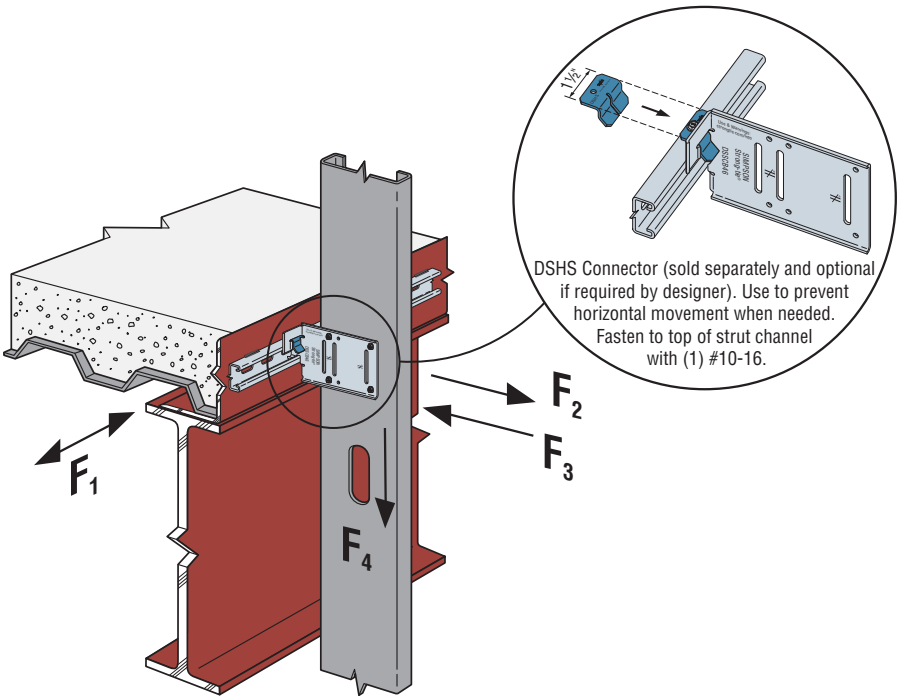


**Typical DSSCB Installation**
**Fixed-Clip Application**

## DSSCB Screw Patterns (Fixed-Clip Applications)

| Model | Pattern H | Pattern I | Pattern J |
|---|---|---|---|
| DSSCB43.5 | 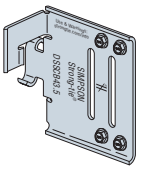 | 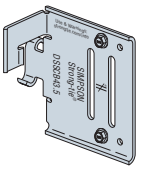 | 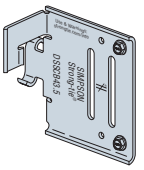 |
| **Model** | **Pattern K** | **Pattern L** | **Pattern M** |
| DSSCB46 | 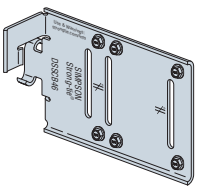 | 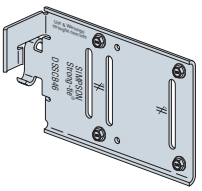 | 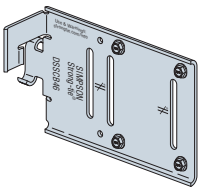 |
| **Model** | **Pattern N** | **Pattern O** | **Pattern P** |
| DSSCB48 | 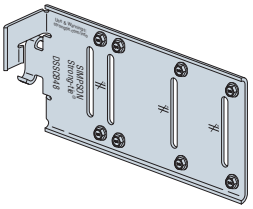 | 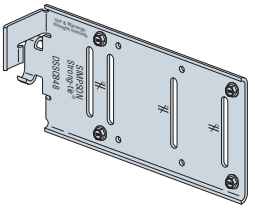 | 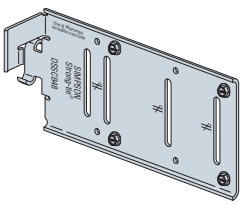 |

C-CF-2020 ©2020 SIMPSON STRONG-TIE COMPANY INC.

# **DSSCB** Bypass Framing Drift Strut Connector





## DSSCB Allowable Fixed-Clip Connector Loads

| Model No. | Stud Thickness mil (ga.) | Screw Pattern | No. of #10 Screws | Allowable Load (lb.) | | | | Code Ref. |
|---|---|---|---|---|---|---|---|---|
| | | | | $F_1$ | $F_2$ | $F_3$ | $F_4$ | |
| DSSCB43.5 | 33 (20) | H | 4 | 220 | 705 | 705 | 345 | IBC, LA |
| | | I, J | 2 | 185 | 355 | 355 | 175 | |
| DSSCB46 | | K | 6 | 220 | 1,060 | 1,060 | 355 | |
| | | L, M | 4 | 185 | 705 | 705 | 350 | |
| DSSCB48 | | N | 8 | 220 | 1,060 | 1,060 | 545 | |
| | | O, P | 4 | 185 | 705 | 705 | 505 | |
| DSSCB43.5 | 43 (18) | H | 4 | 285 | 1,050 | 1,050 | 450 | |
| | | I, J | 2 | 240 | 525 | 525 | 230 | |
| DSSCB46 | | K | 6 | 285 | 1,125 | 1,580 | 460 | |
| | | L, M | 4 | 240 | 1,050 | 1,050 | 455 | |
| DSSCB48 | | N | 8 | 285 | 1,145 | 1,580 | 710 | |
| | | O, P | 4 | 240 | 1,050 | 1,050 | 660 | |
| DSSCB43.5 | 54 (16) | H | 4 | 330 | 1,410 | 2,085 | 1,025 | |
| | | I, J | 2 | 300 | 1,070 | 1,045 | 515 | |
| DSSCB46 | | K | 6 | 360 | 1,410 | 3,130 | 1,050 | |
| | | L, M | 4 | 300 | 1,410 | 2,135 | 1,040 | |
| DSSCB48 | | N | 8 | 360 | 1,440 | 3,130 | 1,145 | |
| | | O, P | 4 | 300 | 1,420 | 2,135 | 1,070 | |
| DSSCB43.5 | 68 (14) and 97 (12) | H | 4 | 395 | 1,410 | 2,160 | 1,025 | |
| | | I, J | 2 | 300 | 1,080 | 1,080 | 515 | |
| DSSCB46 | | K | 6 | 395 | 1,410 | 3,130 | 1,050 | |
| | | L, M | 4 | 300 | 1,410 | 2,160 | 1,040 | |
| DSSCB48 | | N | 8 | 395 | 1,440 | 3,240 | 1,145 | |
| | | O, P | 4 | 300 | 1,420 | 2,160 | 1,070 | |

1. For additional information, see General Information and Notes on p. 22.
2. DSSCB Allowable Fixed-Clip Connector Loads are also limited by the Strut Channel Allowable Anchorage Load table on p. 58. Use the minimum tabulated values from the connector and anchorage load tables as applicable.
3. See illustrations on p. 56 for screw fastener pattern placement to stud framing.
4. Tabulated $F_1$ loads are based on assembly tests with the load through the centerline of the stud. $F_1$ loads require DSHS connector with (1) #10 screw to strut.
5. In-plane capacities ($F_1$) for DSSCB attached to 54 mil (16 ga.) stud can be increased to 500 lb. with the addition of a shoulder screw at first slot from bend line for screw pattern K and L and at middle slot for pattern M (reference patterns shown to the right).

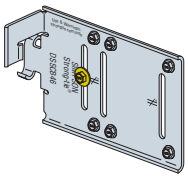

**Screw pattern K with added shoulder screw per note 5**

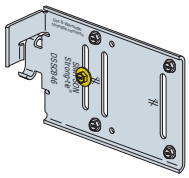

**Screw pattern L with added shoulder screw per note 5**

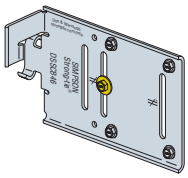

**Screw pattern M with added shoulder screw per note 5**

C-CF-2020 ©2020 SIMPSON STRONG-TIE COMPANY INC.

# **DSSCB** Bypass Framing Drift Strut Connector



## Strut Channel Allowable Anchorage Loads to Steel

| Strut Size (in.) | Models | Weld Anchorage Each Flange | | | | | | | #12-24 Screw Anchorage | | | | | | Code Ref. |
|---|---|---|---|---|---|---|---|---|---|---|---|---|---|---|---|
| | | Weld Spacing (in.) | Required Weld Length (in.) | $F_1$ (lb.) | $F_2$ (lb.) Simple Span | $F_2$ (lb.) Multi-Span | $F_3$ (lb.) | $F_4$ (lb.) | Screw Spacing (in.) | $F_1$ (lb.) | $F_2$ (lb.) Simple Span | $F_2$ (lb.) Multi-Span | $F_3$ (lb.) | $F_4$ (lb.) | |
| 13/16 | **Unistrut®** P4520; P4520HS; P4520T; P4520K0 **PHD** 1201; 1202; 1211; 1212; 1221; 1222; 1241; 1242 **B-Line** B52; B52H1 7/8; B52SH; B52K06 | 4 | 1½ | 775 | 1,455 | 1,390 | 2,710 | 875 | 4 | 755 | 1,315 | 665 | 2,710 | 875 | IBC, LA |
| | | 6 | 1½ | 775 | 970 | 1,030 | 2,710 | 875 | 6 | 755 | 970 | 665 | 2,710 | 655 | |
| | | 8 | 1 | 775 | 730 | 805 | 2,710 | 740 | 8 | 755 | 730 | 485 | 2,710 | — | |
| | | 10 | 1 | 775 | 580 | 660 | 2,710 | — | — | — | — | — | — | — | |
| | | 12 | 1 | 775 | 485 | 555 | 2,710 | — | — | — | — | — | — | — | |
| | | 16 | 1 | 775 | 365 | 445 | 2,710 | — | — | — | — | — | — | — | |
| 1 5/8 | **Unistrut®** P1000; P1000HS; P1000T; P1000K0 **PHD** 1001; 1002; 1011; 1012; 1021; 1022; 1041; 1042 **B-Line** B22; B22H1 7/8; B22SH; B22K06. | 4 | 1½ | 775 | 3,595 | 3,500 | 3,925 | — | 4 | 755 | 1,315 | 1,315 | 3,925 | — | |
| | | 6 | 1½ | 775 | 3,045 | 3,080 | 3,925 | — | 6 | 755 | 1,000 | 965 | 3,925 | — | |
| | | 8 | 1 | 775 | 2,285 | 2,455 | 3,925 | — | 8 | 755 | 885 | 725 | 3,925 | — | |
| | | 10 | 1 | 775 | 1,825 | 2,025 | 3,925 | — | — | — | — | — | — | — | |
| | | 12 | 1 | 775 | 1,520 | 1,715 | 3,925 | — | — | — | — | — | — | — | |
| | | 16 | 1 | 775 | 1,140 | 1,390 | 3,925 | — | — | — | — | — | — | — | |

1. For additional information, see General Information and Notes on p. 22.
2. Allowable anchorage loads are also limited by the DSSCB Connector Load tables on pp. 55 and 57. Use the minimum tabulated values from the connector and anchorage load tables as applicable.
3. Allowable loads are based on 97 mil (12 ga.) thickness strut channel members with a minimum yield strength, $F_y$, of 33 ksi, tensile strength, $F_u$, of 45 ksi. Tabulated values for Unistrut P4520, 1 5/8" x 13/16" channel may be used for Unistrut channel 1 5/8" x 7/8" models P3300, P33HS and P3300T.
4. Allowable loads for self-drilling screws are based on installation in minimum 3/16"-thick structural steel with $F_y$ = 36 ksi. Values listed above may be used where other thicknesses of steel are encountered provided that the fastener has equal or better tested values into thicker steel. It is the responsibility of the designer to select the proper length fasteners based on the steel thickness installation.
5. For screw fastener installation into steel backed by concrete, predrilling of both the steel and the concrete is suggested. For predrilling, use a maximum 3/16"-diameter drill bit. Screw to be installed through steel portion of channel strut (1.5 x screw diameter from punch-out) and centered vertically in web.
6. For any connector occuring within 2" of channel strut splice, load not to exceed — $F_2$ = 865 lb. and $F_4$ = 785 lb.
7. Maximum allowable load of strut channel can be increased at high concentrated loads by welding each flange 1½" from the strut channel to support directly at clip location:
   For 13/16" strut size — $F_1$ = 775 lb., $F_2$ = 1,430 lb., $F_3$ = 2,540 lb. and $F_4$ = 1,050 lb.
   For 1 5/8" strut size — $F_1$ = 775 lb., $F_2$ = 1,870 lb. and $F_3$ = 3,630 lb.
8. Required weld length is on each flange at spacing indicated.
9. Anchorage spacing cannot be greater than framing spacing.
10. Connector load to be located a minimum of 2" from end of strut channel.
11. Simple-span allowable load values are applicable where the strut channel is connected at two points to the structural steel support and the connector load occurs between the fastening points. Multi-span allowable load values are applicable where the strut channel is connected at multiple points (three or more fasteners) to the structural steel support and the connector load can occur in between any of the fastening points.
12. Tabulated values for 13/16" strut may be used for 7/8" struts.
13. Tabulated $F_2$ loads include an adjustment factor of 0.90 for pierced strut channels. For pierced strut channels that have an 0.85 adjustment factor, the $F_2$ loads shall be multiplied by 0.95 factor. No adjustment is required for $F_1$, $F_3$ and $F_4$ loads.

C-CF-2020 ©2020 SIMPSON STRONG-TIE COMPANY INC.

# **DSSCB** Bypass Framing Drift Strut Connector



## Concrete Insert Allowable Load Embedded to Concrete

| Strut Size (in.) | Concrete Insert Models for the DSSCB | Embed Spacing (in.) | $F_2$ (lb.) | $F_3$ (lb.) |
|---|---|---|---|---|
| 13⁄16 or 7⁄8 | Unistrut® 3300 Series<br>B-Line B52I<br>PHD 4101, 4102 | 4 | 1,500 | 2,540 |
| 1 | PHD 4201, 4202 | 4 | 2,000 | 2,540 |
| 1 3⁄8 | Unistrut 3200 Series<br>B-Line B32I<br>PHD 4001, 4002 | 4 | 2,000 | 2,540 |
| 1 5⁄8 | B-Line B22I<br>PHD 4301, 4302 | 4 | 2,000 | 2,540 |

1. Minimum concrete compressive strength, $f'_c$ = 3,000 psi.
2. Multiply tabulated values by a factor of 0.50 when clip is installed within 2" of the end of strut channel.
3. Minimum connector load spacing is 12" o.c.
4. Tabulated values are for concrete inserts with a 12" minimum length.
5. Allowable anchorage loads are also limited by connector load table on p. 55. Use the minimum tabulated value for the connector and the anchorage load tables as applicable.

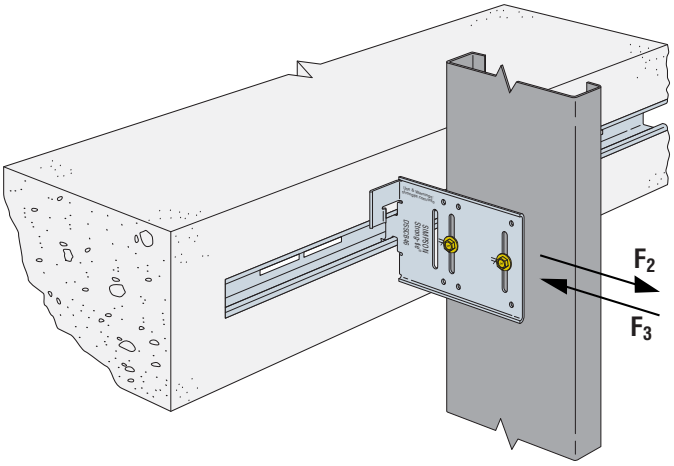


Typical DSSCB Installation Concrete Insert Application

## DSSCB Standoff Distances

| Model No. | Application | Screw Pattern | No. of Screws | 13⁄16" Struts Min. Standoff (in.) | 13⁄16" Struts Max. Standoff (in.) | 1 5⁄8" Struts Min. Standoff (in.) | 1 5⁄8" Struts Max. Standoff (in.) | Concrete Inserts Min. Standoff (in.) | Concrete Inserts Max. Standoff (in.) |
|---|---|---|---|---|---|---|---|---|---|
| DSSCB43.5 | Slide Clip | A | 2 | 1 | 2 5⁄16 | 1 13⁄16 | 3 1⁄8 | 3⁄16 | 1 1⁄2 |
| DSSCB46 | | B | 3 | | 2 5⁄16 | | 3 1⁄8 | | 1 1⁄2 |
| | | C | 2 | | 2 5⁄16 | | 3 1⁄8 | | 1 1⁄2 |
| | | D | 2 | | 3 1⁄16 | | 3 7⁄8 | | 2 1⁄4 |
| DSSCB48 | | E | 4 | | 2 5⁄16 | | 3 1⁄8 | | 1 1⁄2 |
| | | F | 3 | | 2 5⁄16 | | 3 1⁄8 | | 1 1⁄2 |
| | | G | 3 | | 3 1⁄16 | | 3 7⁄8 | | 2 1⁄4 |
| DSSCB43.5 | Fixed Clip | H | 4 | 1 | 2 11⁄16 | — | — | — | — |
| | | I | 2 | | 2 11⁄16 | | — | | — |
| | | J | 2 | | 3 7⁄16 | | — | | — |
| DSSCB46 | | K | 6 | | 2 11⁄16 | | — | | — |
| | | L | 4 | | 2 11⁄16 | | — | | — |
| | | M | 4 | | 3 7⁄16 | | — | | — |
| DSSCB48 | | N | 8 | | 2 11⁄16 | | — | | — |
| | | O | 4 | | 2 11⁄16 | | — | | — |
| | | P | 4 | | 3 7⁄16 | | — | | — |

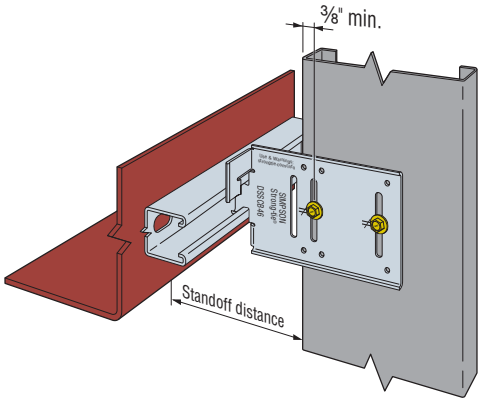


DSSCB Standoff Distance with 1 5⁄8" Strut (13⁄16" Strut Similar) and Minimum Fastener Edge Distance for Slide-Clip Application

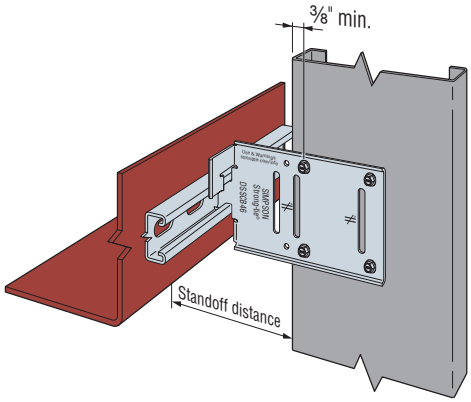


DSSCB Standoff Distance with 13⁄16" Strut and Minimum Fastener Edge Distance for Fixed-Clip Application

C-CF-2020 ©2020 SIMPSON STRONG-TIE COMPANY INC.

# **DSSCB** Bypass Framing Drift Strut Connector



## Strut Requirements

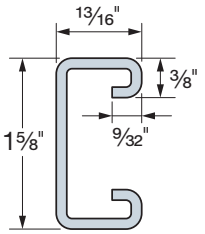


**13⁄16" 12 ga. 33 ksi Strut Channel**
*(by others)*

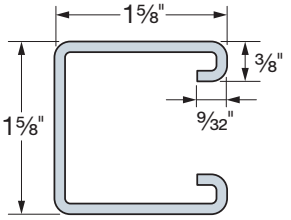


**1 5⁄8" 12 ga. 33 ksi Strut Channel**
*(by others)*

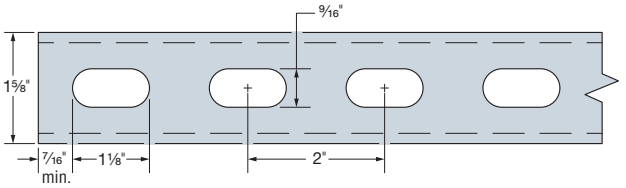


**1 1⁄8" x 9⁄16" @ 2" o.c. Punchout Pattern**

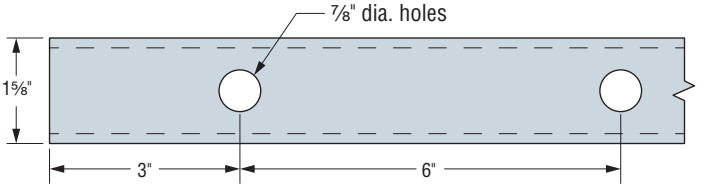


**7⁄8" @ 6" o.c. Punchout Pattern**

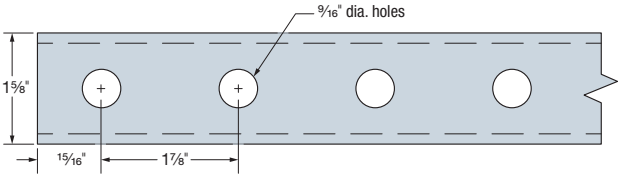


**9⁄16" @ 2" o.c. Punchout Pattern**

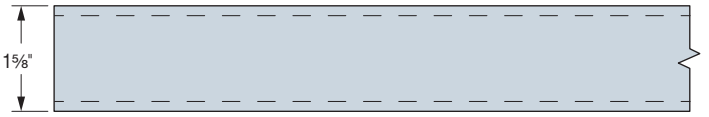


**Unpunched Condition**

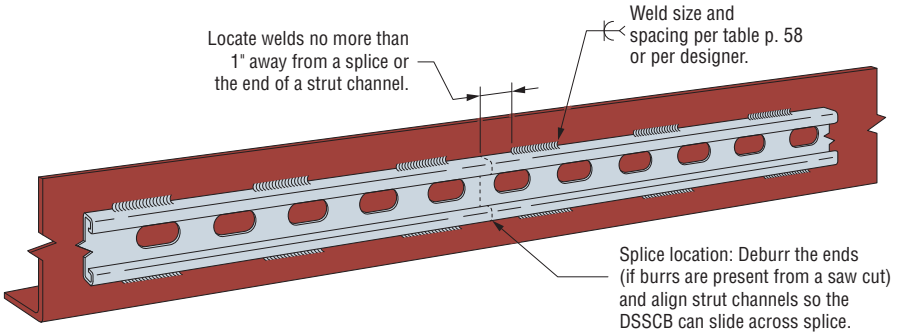


**Typical Strut Channel Anchorage with Welds**

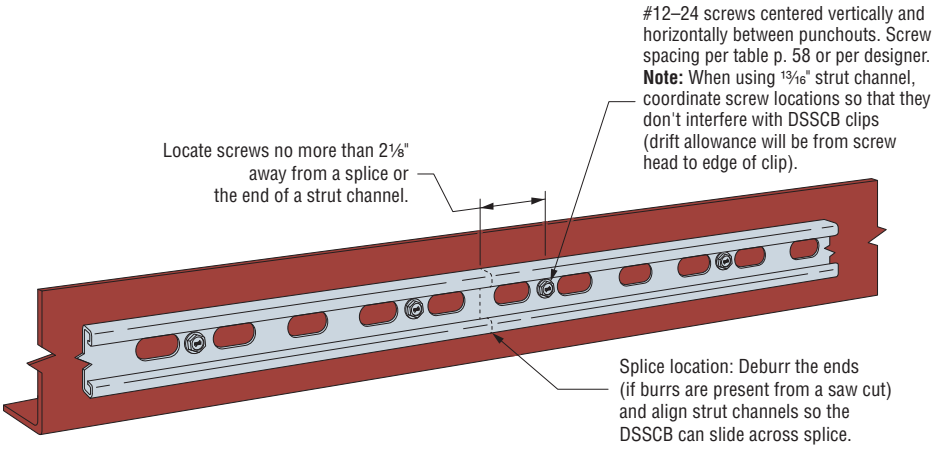


**Typical Strut Channel Anchorage with Screws**

C-CF-2020 ©2020 SIMPSON STRONG-TIE COMPANY INC.

# **DSSCB** Bypass Framing Drift Strut Connector



## Concrete Insert Requirements

### 12 ga. 33 ksi Concrete Insert (by others)

| Manufacturer | Model | A | B |
|---|---|---|---|
| Unistrut® | 3200 | 1⅜" | 1½" |
| | 3300 | ⅞" | 1½" |
| B-Line | B22I | 1⅝" | 1½" | 
| | B32I | 1⅜" | 1½" |
| | B52I | 13⁄16" | 1½" |
| PHD | 4001, 4002 | 1⅜" | 1 3⁄16" |
| | 4101, 4102 | 13⁄16" | 1½" |
| | 4201, 4202 | 1" | 1¼" |
| | 4301, 4302 | 1⅝" | 1½" |

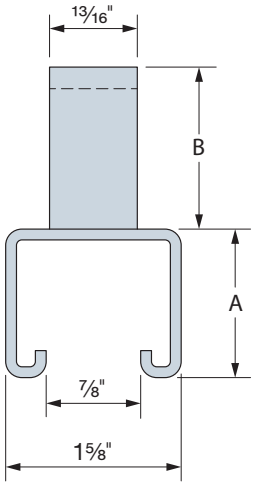


**12 ga. 33 ksi Concrete Insert**
*(by others)*

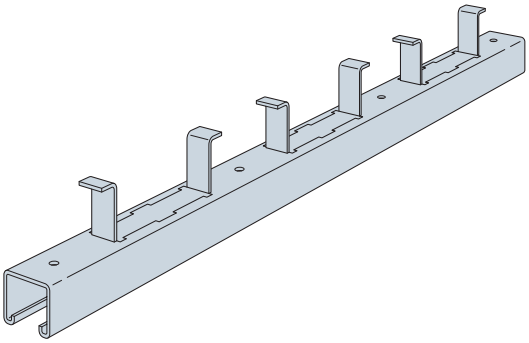

**Typical Unistrut Concrete Insert**

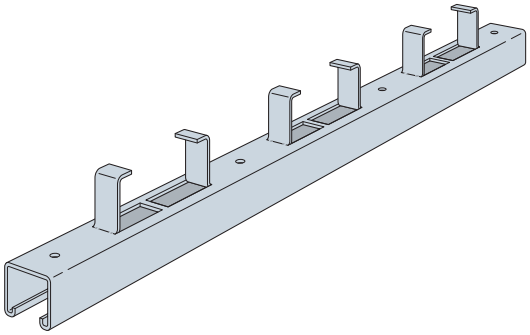

**Typical B-Line and PHD Concrete Insert**

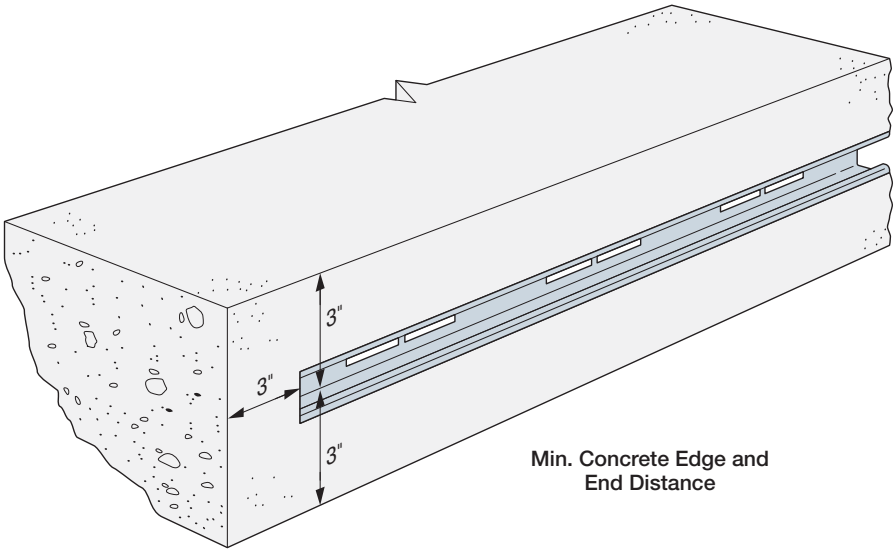


**Min. Concrete Edge and End Distance**

C-CF-2020 ©2020 SIMPSON STRONG-TIE COMPANY INC.

# Rigid Connectors

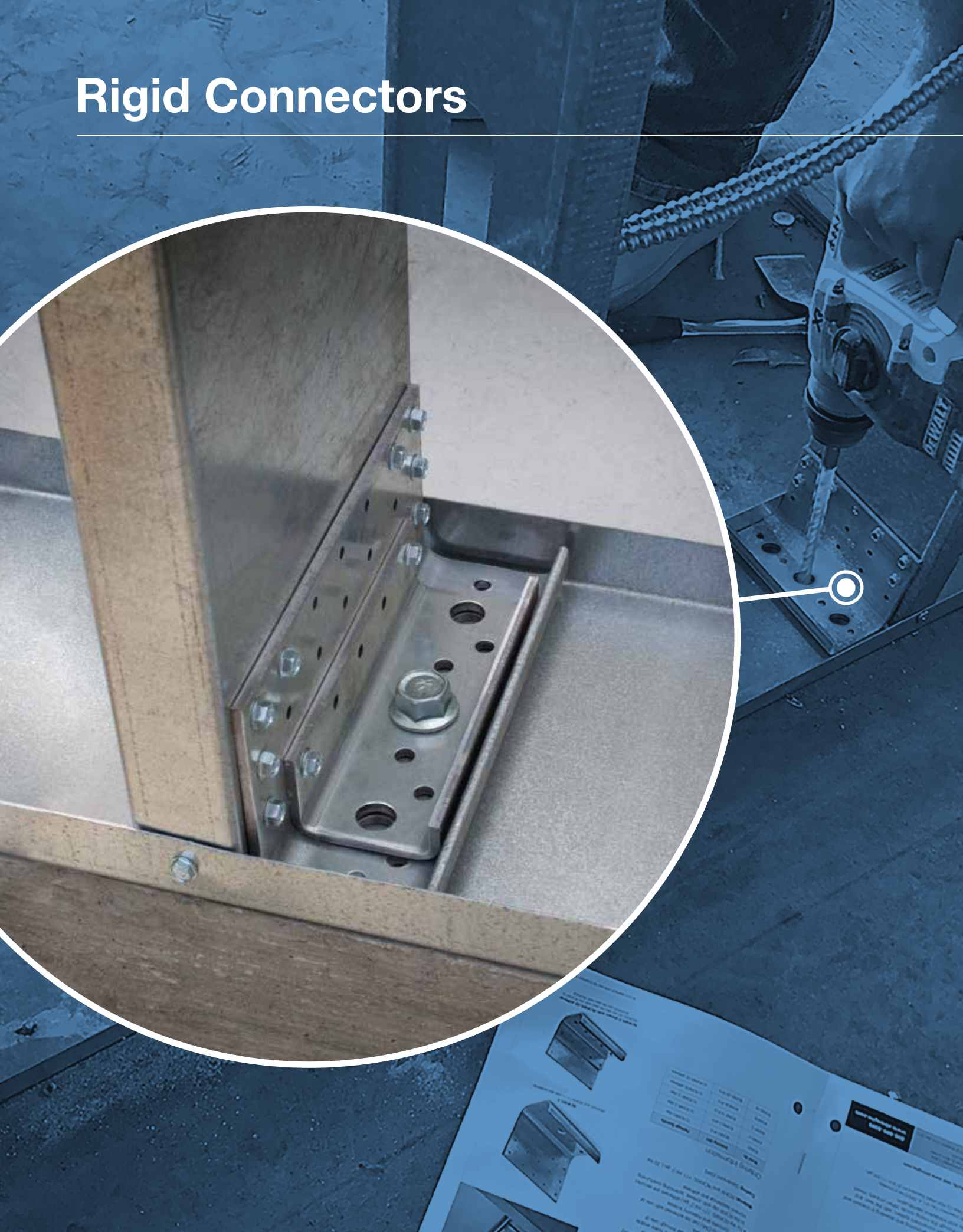

# **FCB** Bypass Framing Fixed-Clip Connector

SIMPSON Strong-Tie®



VALUE ENGINEERED

***This product is preferable to similar connectors because of a) easier installation, b) higher loads, c) lower installed cost, or a combination of these features.***

The FCB clip is an economical, high-performance fixed-clip connector that can be used for a variety of framing applications. It is rated for tension, compression, shear and in-plane loads and offers the designer the flexibility of specifying different screw and anchorage patterns that conform to desired load levels.

**Features:**

- Rated for tension, compression, shear and in-plane loads
- Provides design flexibility with varying screw and anchorage patterns that achieve different load levels
- Strategically placed stiffeners, embossments and anchor holes maximize connector performance

**Material:** 54 mil (16 ga.)

**Finish:** Galvanized (G90)

**Installation:**

- Use the specified type and number of anchors.
- Use the specified number of #12 self-drilling screws to CFS framing. Note that #10 self-drilling screws can be used per the load tables given on **strongtie.com**.

**Codes:** See p. 11 for Code Reference Key Chart

**Ordering Information:**

FCB43.5-R25, FCB45.5-R25, FCB47.5-R25, FCB49.5-R25, and FCB411.5-R25 contain:

- Box of 25 connectors (screws not included)

FCB43.5

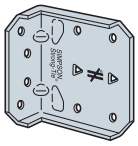

FCB45.5

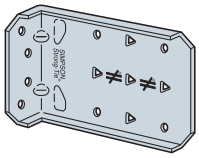

FCB47.5

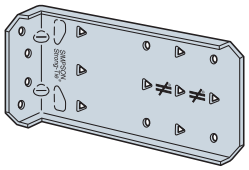

US Patent 8,555,592

FCB49.5

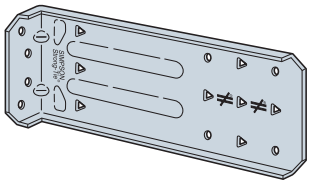

FCB411.5

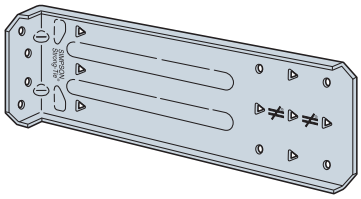

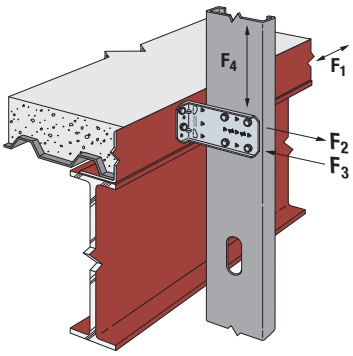


Typical FCB Installation at Bypass Framing

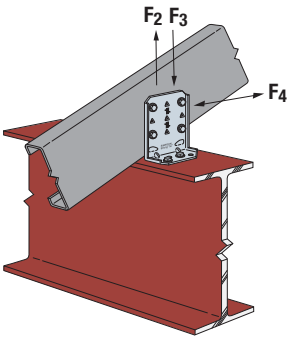


Typical FCB Installation for Roof Rafters

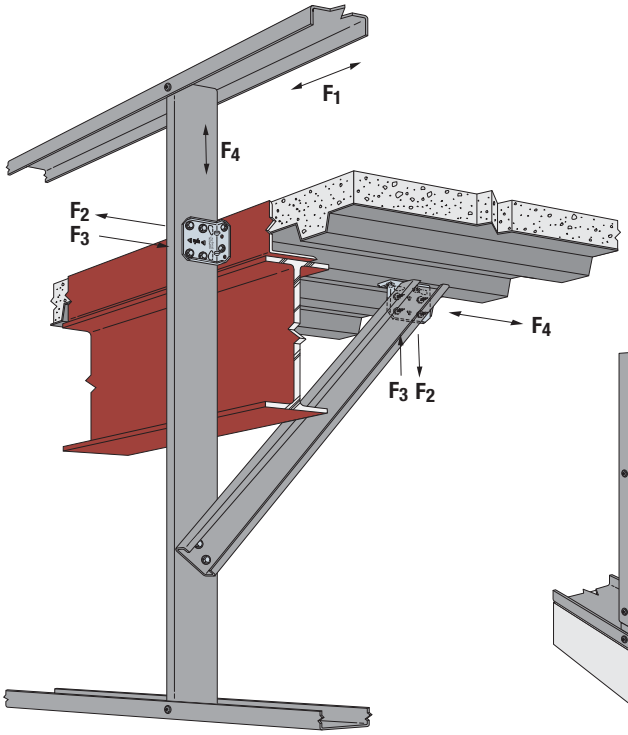


Typical FCB Installation at Sprandrel Studs and Kickers

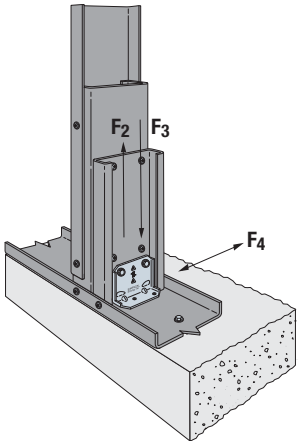


Typical FCB Installation at the Base of a 6" Jamb Stud

C-CF-2020 ©2020 SIMPSON STRONG-TIE COMPANY INC.

# **FCB** Bypass Framing Fixed-Clip Connector



## FCB Allowable Connector Loads (lb.)

| Model No. | Connector Material Thickness mil (ga.) | L (in.) | Min./ Max. | No. of #12–14 Self-Drilling Screws[5] | Stud Thickness | | | | | | | | | | | | Code Ref. |
|---|---|---|---|---|---|---|---|---|---|---|---|---|---|---|---|---|---|
| | | | | | 33 mil (20 ga.) | | | | 43 mil (18 ga.) | | | | 54 mil (16 ga.) | | | | |
| | | | | | $F_1$[3,4] | $F_2$[2] | $F_3$[2] | $F_4$[2] | $F_1$[3,4] | $F_2$[2] | $F_3$[2] | $F_4$[2] | $F_1$[3,4] | $F_2$[2] | $F_3$[2] | $F_4$[2] | |
| FCB43.5 | 54 (16) | 3½ | Min. | 4 | 135 | 755 | 755 | 755 | 205 | 1,105 | 975 | 1,120 | 345 | 1,250 | 975 | 1,490 | IBC, FL, LA |
| | | | Max. | 6 | 205 | 1,100 | 1,130 | 1,130 | 265 | 1,105 | 1,260 | 1,455 | 345 | 1,250 | 1,735 | 1,910 | |
| FCB45.5 | 54 (16) | 5½ | Min. | 4 | 120 | 755 | 755 | 755 | 180 | 1,105 | 975 | 945 | 345 | 1,105 | 975 | 1,325 | |
| | | | Max. | 9 | 155 | 1,100 | 1,260 | 1,180 | 210 | 1,105 | 1,260 | 1,485 | 345 | 1,105 | 1,735 | 1,925 | |
| FCB47.5 | 54 (16) | 7½ | Min. | 4 | 90 | 755 | 755 | 220 | 135 | 1,105 | 945 | 330 | 260 | 1,105 | 945 | 365 | |
| | | | Max. | 12 | 205 | 1,100 | 1,260 | 705 | 265 | 1,105 | 1,260 | 1,050 | 345 | 1,105 | 1,735 | 1,445 | |
| FCB49.5 | 54 (16) | 9½ | Min. | 4 | 90 | 755 | 755 | 170 | 110 | 1,105 | 945 | 255 | 110 | 1,105 | 945 | 365 | |
| | | | Max. | 12 | 205 | 1,100 | 1,260 | 750 | 265 | 1,105 | 1,260 | 1,115 | 345 | 1,105 | 1,735 | 1,200 | |
| FCB411.5 | 54 (16) | 11½ | Min. | 4 | 90 | 755 | 755 | 140 | 90 | 1,105 | 920 | 205 | 90 | 1,105 | 920 | 365 | |
| | | | Max. | 12 | 205 | 1,100 | 1,260 | 795 | 265 | 1,105 | 1,260 | 860 | 345 | 1,105 | 1,735 | 860 | |

1. Min. fastener quantity and load values — fill all round holes; max. fastener quantity and load values — fill all round and triangular holes.
2. Allowable loads are based on clip capacity only and do not consider anchorage. The capacity of the connection system will be the minimum of the tabulated value and the allowable load from the FCB Allowable Anchorage Loads table on p. 65.
3. Anchorage to the supporting structure using welds or a minimum of (2) #12–24 self-drilling screws is required.
4. Tabulated $F_1$ loads are based on assembly tests with the load through the centerline of stud. Tested failure modes were due to screw pullout; therefore compare $F_1$ against $F_p$ calculated per ASCE 7-10 Chapter 13 with $a_p$ = 1.25 and $R_p$ = 1.0.

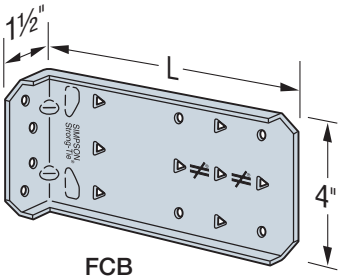


FCB

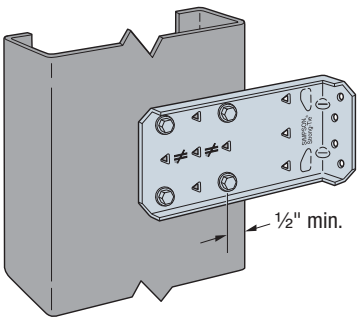


FCB Installation with Min. Fasteners

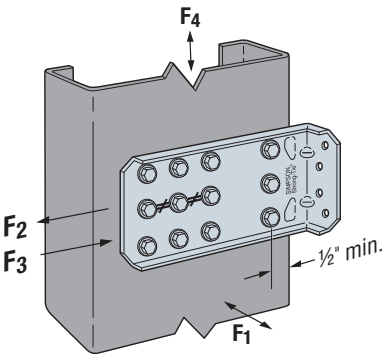


FCB Installation with Max. Fasteners

C-CF-2020 ©2020 SIMPSON STRONG-TIE COMPANY INC.

# **FCB** Bypass Framing Fixed-Clip Connector



## FCB Allowable Anchorage Loads

| Anchorage Type | Minimum Base Material | No. of Anchors | Allowable Load (lb.) | | | | | | | | |
|---|---|---|---|---|---|---|---|---|---|---|---|
| | | | $F_2$ and $F_3$ | $F_4$ | | | | | | | |
| | | | | FCB43.5 | FCB45.5 | FCB47.5 | | FCB49.5 | | FCB411.5 | |
| | | | | Min./Max. | Min./Max. | Min. | Max. | Min. | Max. | Min. | Max. |
| #12–24 self-drilling screws Simpson Strong-Tie® X and XL Metal screws | A36 steel 3⁄16" thick | 2 | 1,115 | 625 | 410 | 255 | 445 | 185 | 265 | 120 | 190 |
| | | 3 | 1,645 | 690 | 450 | 280 | 490 | 200 | 295 | 135 | 210 |
| | | 4 | 2,230 | 1,255 | 820 | 365 | 890 | 355 | 535 | 275 | 380 |
| Simpson Strong-Tie 0.157" x 5⁄8" power-actuated fasteners PDPAT-62KP | A36 steel 3⁄16" thick | 2 | 390 | 410 | 265 | 165 | 290 | 120 | 175 | 75 | 125 |
| | | 3 | 715 | 465 | 305 | 190 | 330 | 135 | 195 | 85 | 140 |
| | | 4 | 970 | 840 | 550 | 340 | 595 | 245 | 355 | 145 | 255 |
| Simpson Strong-Tie 0.157" x 5⁄8" power-actuated fasteners PDPAT-62KP | A572 or A992 steel 3⁄16" thick | 2 | 585 | 410 | 265 | 165 | 290 | 120 | 175 | 75 | 125 |
| | | 3 | 800 | 465 | 305 | 190 | 330 | 135 | 195 | 85 | 140 |
| | | 4 | 1,170 | 840 | 550 | 340 | 595 | 245 | 355 | 145 | 255 |
| Simpson Strong-Tie ¼" x 1¾" Titen® 2 TTN25134H | Concrete $f'_c$ = 2,500 psi | 2 | 380 | 415 | 315 | 195 | 315 | 140 | 205 | 140 | 150 |
| | | 3 | 525 | 470 | 470 | 290 | 470 | 210 | 305 | 210 | 225 |
| | | 4 | 675 | 645 | 630 | 390 | 630 | 280 | 410 | 280 | 300 |
| Weld E70XX electrodes | A36 steel 3⁄16" thick | Hard side: 2" | 1,735 | 1,910 | 1,925 | 365 | 1,445 | 365 | 1,200 | 365 | 860 |
| | | Free side: 1" | | | | | | | | | |

1. Min. fastener quantity and load values — fill all round holes; max. fastener quantity and load values — fill all round and triangular holes.
2. For additional important information, see General Information and Notes on p. 22.
3. Allowable loads are for clip anchorage only. The capacity of the connection system will be the minimum of the tabulated allowable anchorage loads the allowable load from the FCB Allowable Connector Load table on p. 64.
4. Allowable loads for #12–24 self-drilling screws and PDPAT powder-actuated fasteners are based on installation in minimum 3⁄16"-thick structural steel with $F_y$ = 36 ksi. PDPAT values are also provided for A572 steel. Values listed above maybe used where other thicknesses of steel are encountered or other manufacturers are used, provided that the fastener has equal or better tested values (see p. 22). It is the responsibility of the designer to select the proper length fasteners based on the steel thickness installation.
5. For screw fastener installation into steel backed by concrete, predrilling of both the steel and the concrete is suggested. For predrilling use a maximum 3⁄16"-diameter drill bit.

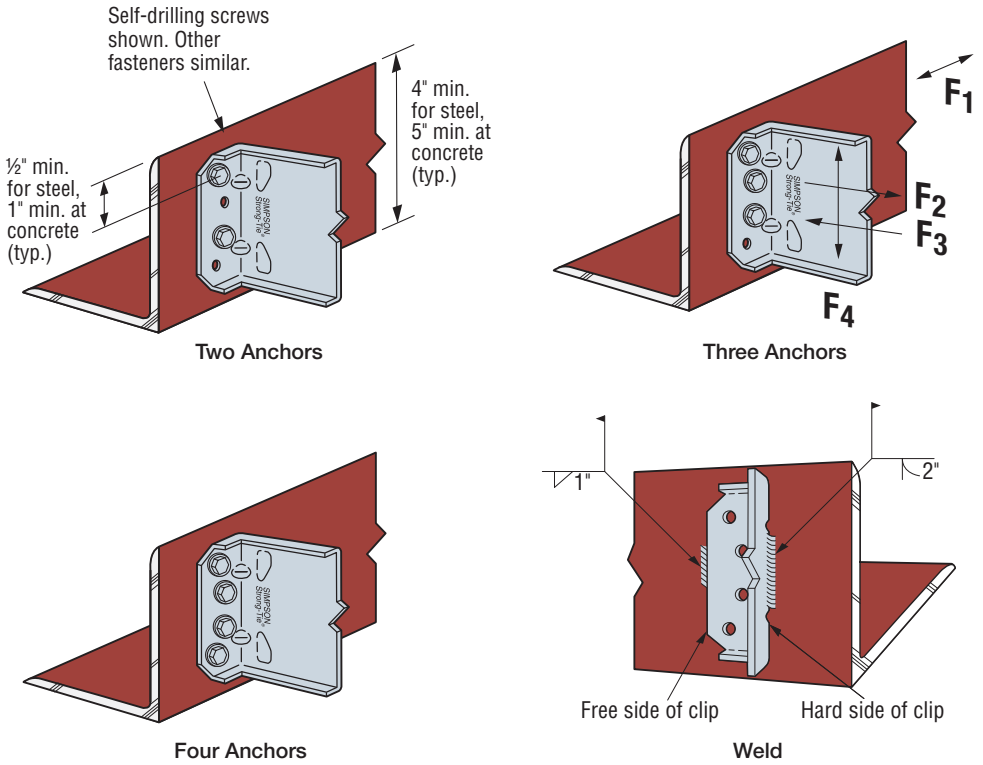


FCB Anchor Layout

C-CF-2020 ©2020 SIMPSON STRONG-TIE COMPANY INC.

# **FCB** Supplemental Information

The following FCB supplemental information is given to help designers with value-engineered solutions for our FCB connectors. Loads are given on our website for fastener patterns other than our standard "min." (fill all round holes) and "max." (fill all round and triangle holes). In addition, the tables on the website give LRFD loads and loads for #10 screws as well as #12 screws. Please visit **strongtie.com/cfs** and reference FCB clip.

## Table 1: FCB Screw Patterns

| | | | | | | |
|---|---|---|---|---|---|---|
| FCB43.5 | Pattern "Min." | Pattern "Max." | | | | |
| | 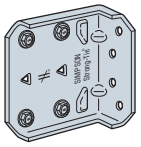 | 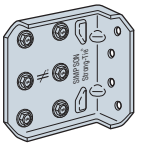 | | | | |
| FCB45.5 | Pattern "Min." | Pattern 1 | Pattern 2 | Pattern "Max." | | |
| | 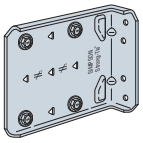 | 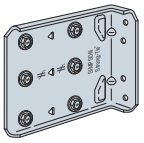 | 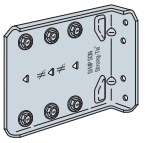 | 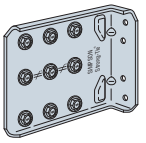 | | |
| FCB47.5 | Pattern "Min." | Pattern 3 | Pattern 4 | Pattern 5 | Pattern 6 | Pattern "Max." |
| | 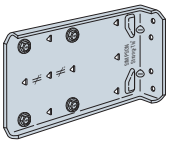 | 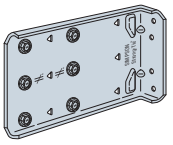 | 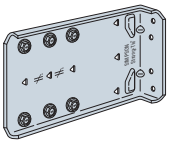 | 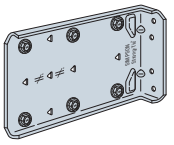 | 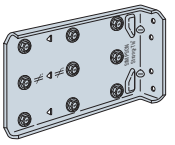 | 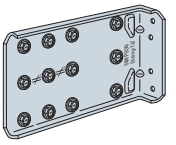 |
| FCB49.5 | Pattern "Min." | Pattern 7 | Pattern 8 | | | |
| | 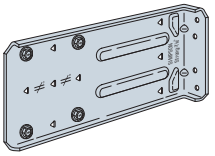 | 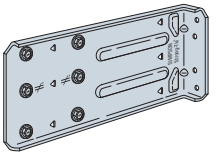 | 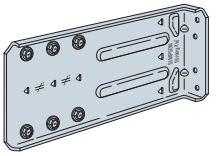 | | | |
| | Pattern 9 | Pattern 10 | Pattern "Max." | | | |
| | 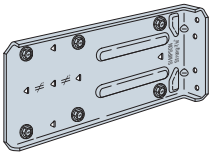 | 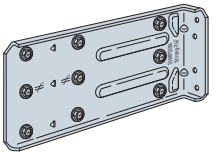 | 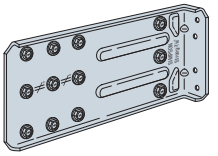 | | | |
| FCB411.5 | Pattern "Min." | Pattern 11 | Pattern 12 | | | |
| | 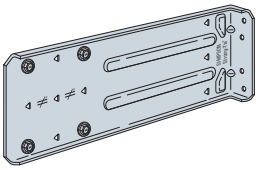 | 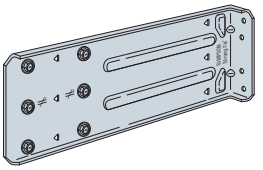 | 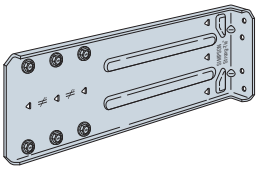 | | | |
| | Pattern 13 | Pattern 14 | Pattern "Max." | | | |
| | 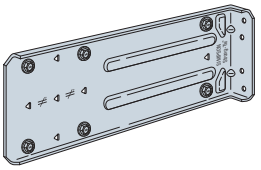 | 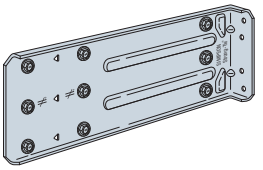 | 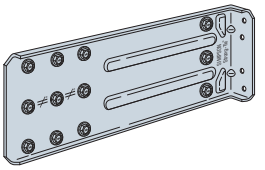 | | | |

For load capacities for patterns 1 through 10, refer to FCB clip on **strongtie.com**.



C-CF-2020 ©2020 SIMPSON STRONG-TIE COMPANY INC.

# **FC** Bypass Framing Fixed-Clip Connector



Ideal for high-seismic areas, Simpson Strong-Tie® FC connectors are the optimal solution for fixed-clip bypass framing. FC clips are often welded to the structure in high-seismic zones, but they also feature anchorage holes so that concrete screws or powder-actuated fasteners can be used to attach the clip to the structure. In addition to its anchorage versatility, the FC clip features prepunched screw holes for the framing attachment, eliminating the need for predrilling holes or worrying that fastener placement doesn't match the designer specifications. FC connectors are manufactured using heavy-duty 10- and 12-gauge steel to provide exceptional resistance to in-plane seismic load.

**Features:**

- The clips come in lengths of 3½", 6" and 8" and are intended to be used with 3⅝", 6" and 8" studs, respectively
- The maximum stand-off distance is 1" for 3⅝" studs and 1½" for 6" and 8" studs
- Embossments in the bend line provide increased strength and stiffness in the $F_1$ and $F_2$ load directions, but are positioned towards the center of the clip so that 1½"-long welds can be applied at the top and bottom of the clip
- Prepunched large-diameter anchor holes accommodate ¼"-diameter concrete screws like the Simpson Strong-Tie Titen HD® screw anchor
- Prepunched small-diameter anchor holes accommodate powder-actuated fasteners like the 0.157"-diameter Simpson Strong-Tie PDPAT or #12 self-drilling Simpson Strong-Tie Strong-Drive® XL Large-Head Metal screw

**Material:** 50 ksi

**Finish:** Galvanized (G90)

**Installation:**

- Use the specified type and number of fasteners and anchors

**Codes:** See p. 11 for Code Reference Key Chart

**WANT MORE OPTIONS IN YOUR CLIP?**

**Try our SCS hybrid clip. Supports slip and fixed conditions in one clip. Also has the most versatile options in the industry for attaching to structure. Attach with weld, screws, powder-actuated fasteners to steel or attach to concrete with single ½"-diameter or (2) ¼"-diameter anchors. Reference p. 30 for SCS fixed-clip load chart.**

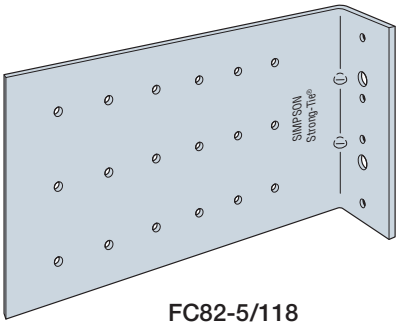


**FC82-5/118**

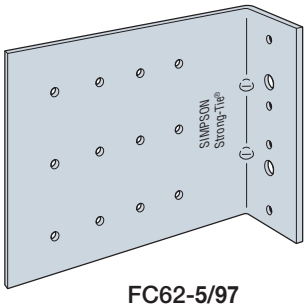


**FC62-5/97**
*(FC62-5/118 similar)*

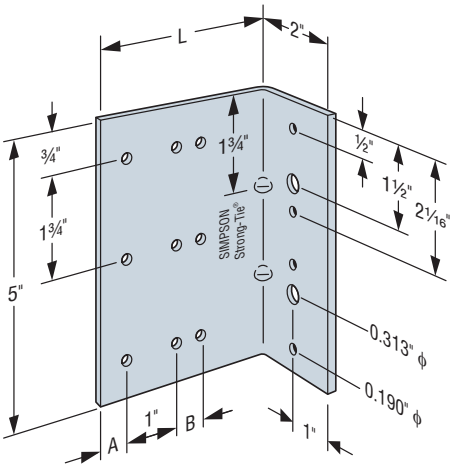


**FC32-5/97**

## Ordering Information and Dimensions

| Model No. | Ordering SKU | Thickness mil (ga.) | L (in.) | A (in.) | B (in.) |
|---|---|---|---|---|---|
| FC32-5/97 | FC32-5/97-R25 | 97 (12) | 3½ | ½ | ½ |
| FC62-5/97 | FC62-5/97-R25 | 97 (12) | 6 | 1 | 1 |
| FC62-5/118 | FC62-5/118-R25 | 118 (10) | 6 | 1 | 1 |
| FC82-5/118 | FC82-5/118-R25 | 118 (10) | 8 | 1 | 1 |

**Note:** Each box contains (25) connectors.

C-CF-2020 ©2020 SIMPSON STRONG-TIE COMPANY INC.

# **FC** Bypass Framing Fixed-Clip Connector



## FC Allowable Connector Loads

| Model No. | Stud Thickness mil (ga.) | Fasteners to Stud: Allowable Pullout Per Single #10 Screw | Fasteners to Stud: No. of #10 Self-Drilling Screws | Allowable Load (lb.): $F_1$ 1" Stand-Off | Allowable Load (lb.): $F_1$ 1½" Stand-Off | Allowable Load (lb.): $F_2$ | Allowable Load (lb.): $F_3$ | Allowable Load (lb.): $F_4$ | Code Ref. |
|---|---|---|---|---|---|---|---|---|---|
| FC32-5/97 | 33 (20) | 85 | 4 | 165 | — | 705 | 1,130 | 705 | — |
| | | | 6 | 225 | — | 1,060 | 1,355 | 1,060 | |
| FC62-5/97 | | | 4 | 115 | 130 | 705 | 1,130 | 705 | |
| | | | 6 | 140 | 160 | 1,060 | 1,355 | 1,060 | |
| FC62-5/118 | | | 4 | 115 | 130 | 705 | 1,130 | 705 | |
| | | | 6 | 140 | 160 | 1,060 | 1,355 | 1,060 | |
| FC82-5/118 | | | 4 | 105 | 120 | 705 | 1,130 | 705 | |
| | | | 6 | 135 | 155 | 1,060 | 1,355 | 1,060 | |
| FC32-5/97 | 43 (18) | 110 | 4 | 215 | — | 1,050 | 1,470 | 1,050 | |
| | | | 6 | 290 | — | 1,580 | 1,765 | 1,580 | |
| FC62-5/97 | | | 4 | 150 | 175 | 1,050 | 1,470 | 1,050 | |
| | | | 6 | 185 | 215 | 1,580 | 1,765 | 1,580 | |
| FC62-5/118 | | | 4 | 150 | 175 | 1,050 | 1,470 | 1,050 | |
| | | | 6 | 185 | 215 | 1,580 | 1,765 | 1,580 | |
| FC82-5/118 | | | 4 | 140 | 160 | 1,050 | 1,470 | 1,050 | |
| | | | 6 | 175 | 200 | 1,580 | 1,765 | 1,580 | |
| FC32-5/97 | 54 (16) | 200 | 4 | 395 | — | 2,135 | 2,885 | 2,045 | |
| | | | 6 | 530 | — | 2,690 | 2,885 | 2,195 | |
| FC62-5/97 | | | 4 | 325 | 375 | 2,135 | 2,885 | 2,045 | |
| | | | 6 | 405 | 465 | 2,690 | 2,885 | 2,195 | |
| FC62-5/118 | | | 4 | 345 | 395 | 2,135 | 2,885 | 2,045 | |
| | | | 6 | 370 | 425 | 3,205 | 2,885 | 2,195 | |
| FC82-5/118 | | | 4 | 325 | 375 | 2,135 | 2,885 | 2,045 | |
| | | | 6 | 440 | 505 | 3,205 | 2,885 | 2,195 | |
| FC32-5/97 | 68 (14) | 250 | 4 | 495 | — | 2,160 | 2,885 | 2,045 | |
| | | | 6 | 670 | — | 2,690 | 2,885 | 2,195 | |
| FC62-5/97 | | | 4 | 435 | 500 | 2,160 | 2,885 | 2,045 | |
| | | | 6 | 465 | 535 | 2,690 | 2,885 | 2,195 | |
| FC62-5/118 | | | 4 | 435 | 500 | 2,160 | 2,885 | 2,045 | |
| | | | 6 | 465 | 535 | 3,240 | 3,780 | 2,195 | |
| FC82-5/118 | | | 4 | 410 | 470 | 2,160 | 2,885 | 2,045 | |
| | | | 6 | 555 | 640 | 3,240 | 3,780 | 2,195 | |
| FC32-5/97 | 97 (12) | 355 | 4 | 710 | — | 2,160 | 2,885 | 2,045 | |
| | | | 6 | 955 | — | 2,690 | 2,885 | 2,195 | |
| FC62-5/97 | | | 4 | 775 | 775 | 2,160 | 2,885 | 2,045 | |
| | | | 6 | 1295 | 1295 | 2,690 | 2,885 | 2,195 | |
| FC62-5/118 | | | 4 | 775 | 775 | 2,160 | 2,885 | 2,045 | |
| | | | 6 | 1150 | 1150 | 3,240 | 3,780 | 2,195 | |
| FC82-5/118 | | | 4 | 585 | 585 | 2,160 | 2,885 | 2,045 | |
| | | | 6 | 790 | 790 | 3,240 | 3,780 | 2,195 | |

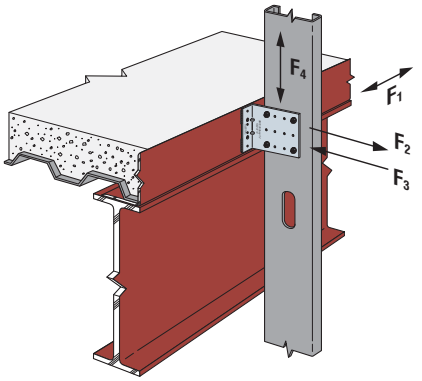


**Typical FC Installation at Bypass Framing**

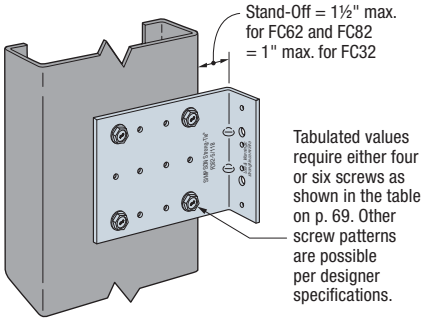


**FC62 with Four Screws**

1. For additional important information, see General Information and Notes on p. 22.
2. FC Allowable Connector Loads are also limited by the FC Anchorage Load tables on pp. 69 and 70. Use the minimum tabulated values from the connector and anchorage load tables as applicable.
3. See illustrations on p. 69 for screw fastener placement to stud framing.
4. Tabulated $F_1$ loads are based on assembly tests with the load through the centerline of stud. Tested failure modes were due to screw pullout; therefore compare $F_1$ against $F_p$ calculated per ASCE 7-10 Chapter 13 with $a_p = 1.25$ and $R_p = 1.0$.
5. $F_1$ loads are based on maximum stand-off distances of 1" or 1½" as shown. Other loads are applicable to a 1" stand-off for FC32 and 1" or 1½" stand-off for FC62 and FC82.
6. The allowable plastic moment at the bend line in the $F_1$ load direction for 97 mil (12 ga.) and 118 mil (10 ga.) FC connectors are 395 in.-lb. and 675 in.-lb., respectively.

C-CF-2020 ©2020 SIMPSON STRONG-TIE COMPANY INC.

# **FC** Bypass Framing Fixed-Clip Connector



## FC Screw Patterns

| Screw Pattern | Models | | |
|---|---|---|---|
| | FC32-5/97 | FC62-5/97 and FC62-5/118 | FC82-5/118 |
| 4 screws | 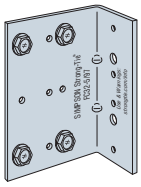 | 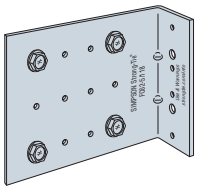 | 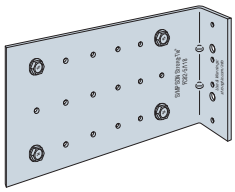 |
| 6 screws | 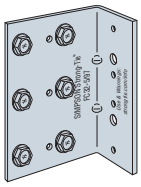 | 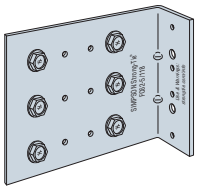 | 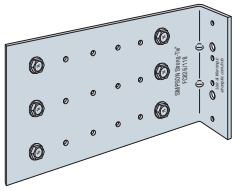 |

## FC Allowable Anchorage Loads to Steel

| Anchorage Type | Minimum Base Material | No. of Anchors | Allowable Load (lb.) | | |
|---|---|---|---|---|---|
| | | | $F_1$ | $F_2$ and $F_3$ | $F_4$ |
| #12–24 self-drilling screws Simpson Strong-Tie® X and XL Metal screws | A36 steel ³⁄₁₆" thick | 4 | — | 2,545 | 2,545 |
| #14 self-drilling screws Simpson Strong-Tie E Metal screws E1B1414 | A36 steel ³⁄₁₆" thick | 4 | — | 2,620 | 2,610 |
| Simpson Strong-Tie 0.157" x ⅝" powder-actuated fasteners PDPAT-62KP | A36 steel ³⁄₁₆" thick | 4 | — | 1,040 | 1,040 |
| Simpson Strong-Tie 0.157" x ⅝" powder-actuated fasteners PDPAT-62KP | A572 Gr. 50 or A992 steel ³⁄₁₆" thick | 4 | — | 1,710 | 1,710 |
| Weld E70XX electrodes | A36 steel ³⁄₁₆" thick | (2) Hard side: 1½" | 2,040 | 3,710 | 4,330 |
| | | (2) Free side: 1½" | | | |

1. For additional important information, see General Information and Notes on p. 22.
2. Allowable anchorage loads are also limited by the FC Connector Load table on p. 68. Use the minimum tabulated values from the connector and anchorage load tables as applicable.
3. Allowable loads for #12–24 self-drilling screws and PDPAT powder-actuated fasteners are based on installation in minimum ³⁄₁₆" thick structural steel with $F_y$ = 36 ksi. PDPAT values are also provided for A572 steel. Values listed above maybe used where other thicknesses of steel are encountered or other manufacturers are used, provided that the fastener has equal or better tested values (see p. 22). It is the responsibility of the designer to select the proper length fasteners based on the steel thickness installation.
4. For screw fastener installation into steel backed by concrete, predrilling of both the steel and the concrete is suggested. For predrilling, use a maximum ³⁄₁₆"-diameter drill bit.

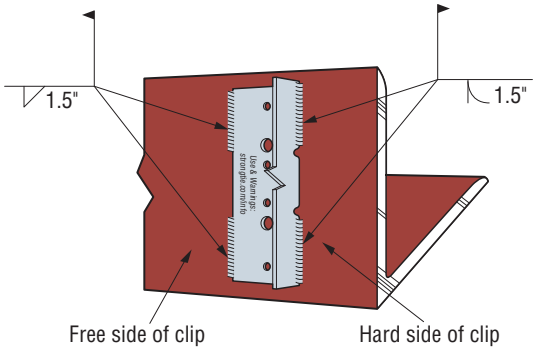


**Weld**

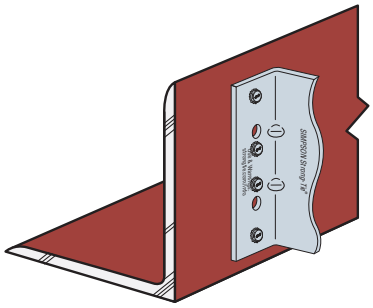

**4 PAF Anchor Placement**
*(4 screws similar)*

**FC Anchor Layout**

C-CF-2020 ©2020 SIMPSON STRONG-TIE COMPANY INC.

# **FC** Bypass Framing Fixed-Clip Connector



## Allowable Titen HD® Anchorage Loads into Concrete with FC Clip (lb.)

| Anchorage Type | Nominal Embedment (in.) | Anchor Quantity and Size | $f'_c$ (psi) | Load Direction | Wind and Seismic in SDC A&B | | Seismic in SDC C through F |
|---|---|---|---|---|---|---|---|
| | | | | | Uncracked Concrete | Cracked Concrete | Cracked Concrete[6] |
| Simpson Strong-Tie® Titen HD screw anchor THDB25178H | 1⅝ | (2) ¼" x 1⅞" | 3,000 | $F_1$ | 335 | 240 | 280 |
| | | | | $F_2$ and $F_3$ | 660 | 630 | 550 |
| | | | | $F_4$ | 565 | 405 | 470 |
| | | | 4,000 | $F_1$ | 390 | 280 | 325 |
| | | | | $F_2$ and $F_3$ | 760 | 725 | 635 |
| | | | | $F_4$ | 655 | 465 | 545 |
| Simpson Strong-Tie Titen HD screw anchor THDB25234H | 2½ | (2) ¼" x 2¾" | 3,000 | $F_1$ | 370 | 265 | 310 |
| | | | | $F_2$ and $F_3$ | 475 | 695 | 610 |
| | | | | $F_4$ | 515 | 445 | 520 |
| | | | 4,000 | $F_1$ | 430 | 305 | 360 |
| | | | | $F_2$ and $F_3$ | 550 | 805 | 705 |
| | | | | $F_4$ | 590 | 515 | 600 |

1. Allowable anchor capacities have been determined using ACI 318-14 Chapter 17 calculations with a minimum concrete compressive strength ($f'_c$) of 3,000 and 4,000 psi in normal-weight concrete. Tabulated values shall be multiplied by a factor ($\lambda_a$) of 0.6 for sand light-weight concrete.
2. Edge distance is assumed to be 1½", and end distance is 2⅝".
3. Load values are for group anchors based on ACI 318, condition B, load factors from ACI 318-14 Section 5.3, no supplement edge reinforcement, $\Psi_{c,V}$ = 1.0 for cracked concrete and periodic special inspection.
4. Allowable Stress Design (ASD) values were determined by multiplying calculated LRFD capacities by a conversion factor, Alpha ($\alpha$), of 0.70 for seismic load and 0.6 for wind loads. ASD values for other combinations may be determined using alternate conversion factors.
5. Tabulated allowable ASD loads for Wind and Seismic in SDC A&B are based on using wind conversion factors and may be increased by 1.17 for SDC A and B only.
6. Design loads shall include the over-strength factor per ASCE7 Section 12.4.3. For fasteners in exterior wall connection systems, $\Omega_o$ = 1.5 per Table 13.5-1.
7. Allowable loads for $F_4$ are based on the governing loading direction which is toward the edge of slab.
8. Allowable loads for $F_1$ are based on the governing loading direction which is toward the end of slab.
9. For anchor subjected to both tension and shear loads, it shall be designed to satisfy the following:
   - For $N_a / N_{all} \leq 0.2$, the full allowable load in shear is permitted.
   - For $V_a / V_{all} \leq 0.2$, the full allowable load in tension is permitted.
   - For all other cases: $N_a / N_{all} + V_a / V_{all} \leq 1.2$ where:
     $N_a$ = Applied ASD tension load
     $N_{all}$ = Allowable $F_2$ or $F_3$ load from the FC Allowable Anchorage Loads for Concrete table
     $V_a$ = Applied ASD shear load
     $V_{all}$ = Allowable $F_4$ or $F_1$ load from the FC Allowable Anchorage Loads for Concrete table
10. Tabulated allowable loads are based on anchorage only. The capacity of the connection system shall be the minimum of the allowable anchorage load and the FC Allowable Connector Loads.

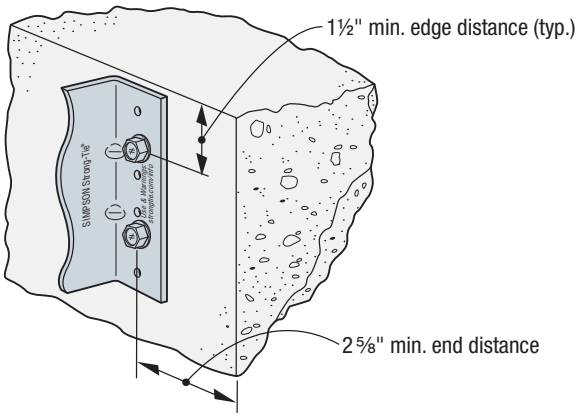


Titen HD Anchorage

**For single-bolt fixed-clip connection to concrete, try the SCS hybrid clip; see p. 30.**

C-CF-2020 ©2020 SIMPSON STRONG-TIE COMPANY INC.

# **FSB** Bypass Framing Fixed-Clip Strut Connector



The FSB connector is the fixed-clip version of our popular SSB slide-clip strut connector. The FSB is commonly used at the bottom flange of a steel beam to accommodate large stand-off distances for bypass curtain-wall studs.

**Material:** 54 mil (16 ga.)

**Finish:** Galvanized (G90)

**Installation:**

- Use the specified type and number of anchors.
- Use the specified type and number of screw fasteners to the stud.
- If the FSB intrudes on interior space, it can be trimmed. The trimmed part shall allow an edge distance of ½" or greater from the center of the nearest anchor to the end of the trimmed part.

**Codes:** See p. 11 for Code Reference Key Chart

**Ordering Information:**

FSB3.518-R25 is a box of 25 connectors.

**NEED SHORTER OR LONGER STRUT LENGTHS?**

**Try the HYS hybrid strut. HYS strut comes in 12", 15", 24" and 30" lengths. Reference p. 42 for HYS fixed-clip load chart.**

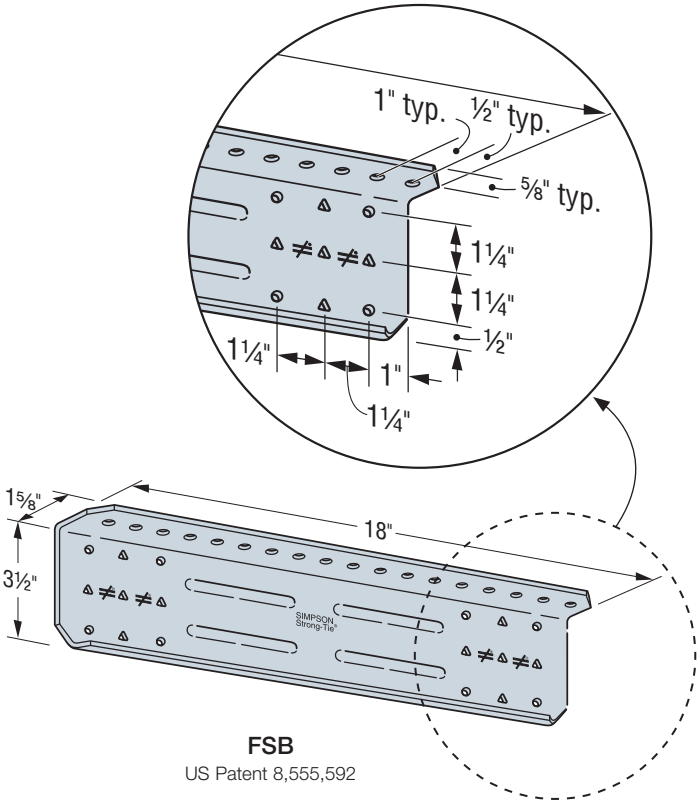


**FSB**
US Patent 8,555,592

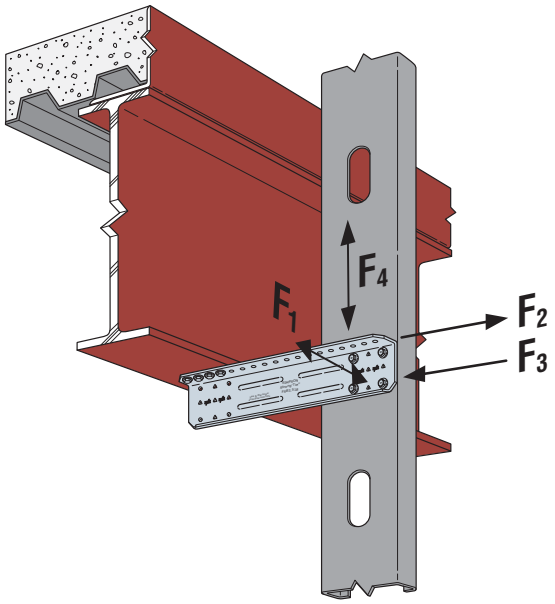


**Typical FSB3.518 Installation**

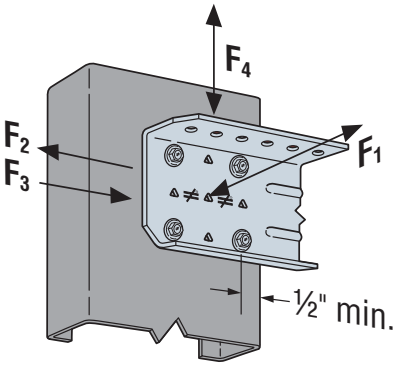


**FSB Installation with the Min. Number of Fasteners**

C-CF-2020 ©2020 SIMPSON STRONG-TIE COMPANY INC.

# **FSB** Bypass Framing Fixed-Clip Strut Connector



## FSB Allowable Connector Loads (lb.)

| Model No. | Connector Material Thickness mil (ga.) | Min./ Max. | No. of #10–16 Screws | Stud Thickness | | | | | | | | | | | | Code Ref. |
|---|---|---|---|---|---|---|---|---|---|---|---|---|---|---|---|---|
| | | | | 33 mil (20 ga.) | | | | 43 mil (18 ga.) | | | | 54 mil (16 ga.) | | | | |
| | | | | $F_1$[4] | $F_2$ | $F_3$ | $F_4$[5] | $F_1$[4] | $F_2$ | $F_3$ | $F_4$[5] | $F_1$[4] | $F_2$ | $F_3$ | $F_4$[5] | |
| FSB3.518 | 54 (16) | Min. | 4 | 120 | 705 | 705 | 160 | 150 | 1,050 | 1,050 | 210 | 145 | 1,670 | 1,615 | 210 | — |
| | | Max. | 9 | 155 | 1,590 | 1,340 | 160 | 200 | 2,365 | 2,180 | 210 | 215 | 2,670 | 2,180 | 260 | |

1. For additional important information, see General Information and Notes on p. 22.
2. FSB Allowable Connector Loads are also limited by the FSB Allowable Anchorage Loads table. Use the minimum value from the connector and anchorage load tables as applicable.
3. Min. fasteners quantity and tabulated values — fill round holes; max. fasteners quantity and tabulated values — fill round and triangle holes.
4. Tabulated $F_1$ loads are based on assembly tests with the load through the centerline of stud. Tested failure modes were due to screw pullout; therefore compare $F_1$ against $F_p$ calculated per ASCE 7-10 Chapter 13 with $a_p$ = 1.25 and $R_p$ = 1.0.
5. Tabulated $F_4$ values are controlled by ⅛" deformation limit. The connector strength load in the $F_4$ direction is 550 lb.
6. Maximum standoff for FSB is 11" with two anchors to primary structure and 10" with four anchors to primary structure.

## FSB Allowable Anchorage Loads (lb.)

| Anchorage Type | No. of Anchors | $F_1$ | $F_2$ and $F_3$ | $F_4$ |
|---|---|---|---|---|
| #12–24 self-drilling screws | 2 | 270 | 1,250 | 550 |
| | 4 | 270 | 2,500 | 550 |
| Simpson Strong-Tie® 0.157" x ⅝" powder-actuated fasteners PDPAT-62KP | 2 | — | 820 | — |
| | 4 | 270 | 1,640 | 550 |
| Weld | Hard side: 2" | 270 | 2,455 | 550 |
| | Free side: 1" | | | |

1. Allowable loads for #12–24 self-drilling screws and PDPAT powder-actuated fasteners are based on installation in minimum 3/16" thick structural steel with $F_y$ = 36 ksi. It is the responsibility of the designer to select the proper length fasteners.
2. Allowable loads for welded connections require E70XX electrodes with a minimum throat size equal to the clip thickness. Welding shall comply with AWS D1.3. Welding galvanized steel may produce harmful fumes; follow proper welding procedures and precautions.
3. Allowable loads are for anchorage only. It is the responsibility of the designer to verify the strength and stability of the structure for loads imposed by the cold-formed steel framing connections.

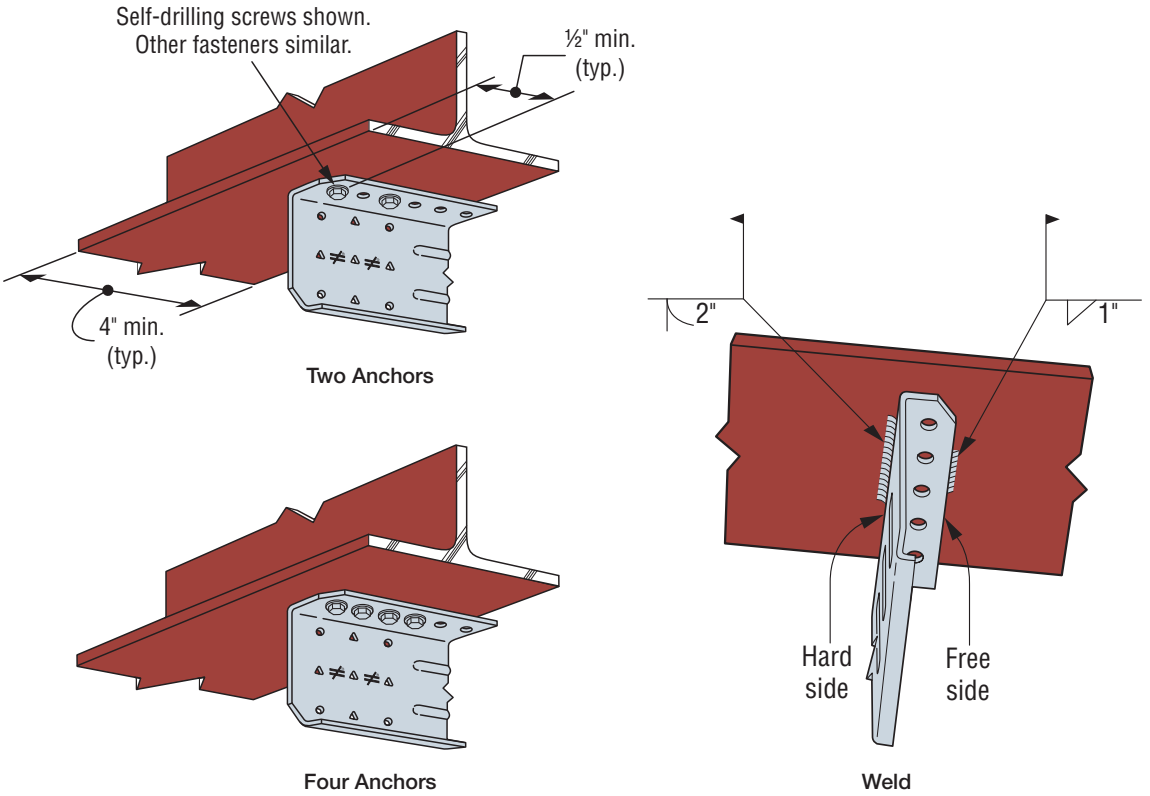


FSB Anchor Layout

C-CF-2020 ©2020 SIMPSON STRONG-TIE COMPANY INC.

# **DoD-Compliant** Blast Design



## Does your project require DoD-compliant blast design?

Although Allowable Strength Design (ASD) is widely used by designers of Cold-Formed Steel (CFS) construction, some projects require additional connector limit states beyond the typical ASD values that are normally tabulated in our load tables. For example, many Department of Defense (DoD) projects require blast design of exterior wall framing and connections. Such projects may require the LRFD strength or nominal strength for the blast calculations. **These limit states required for blast design are located on strongtie.com. Search for the particular product required for blast design on our website to find these capacities.**

Not finding what you need? Please contact Simpson Strong-Tie.

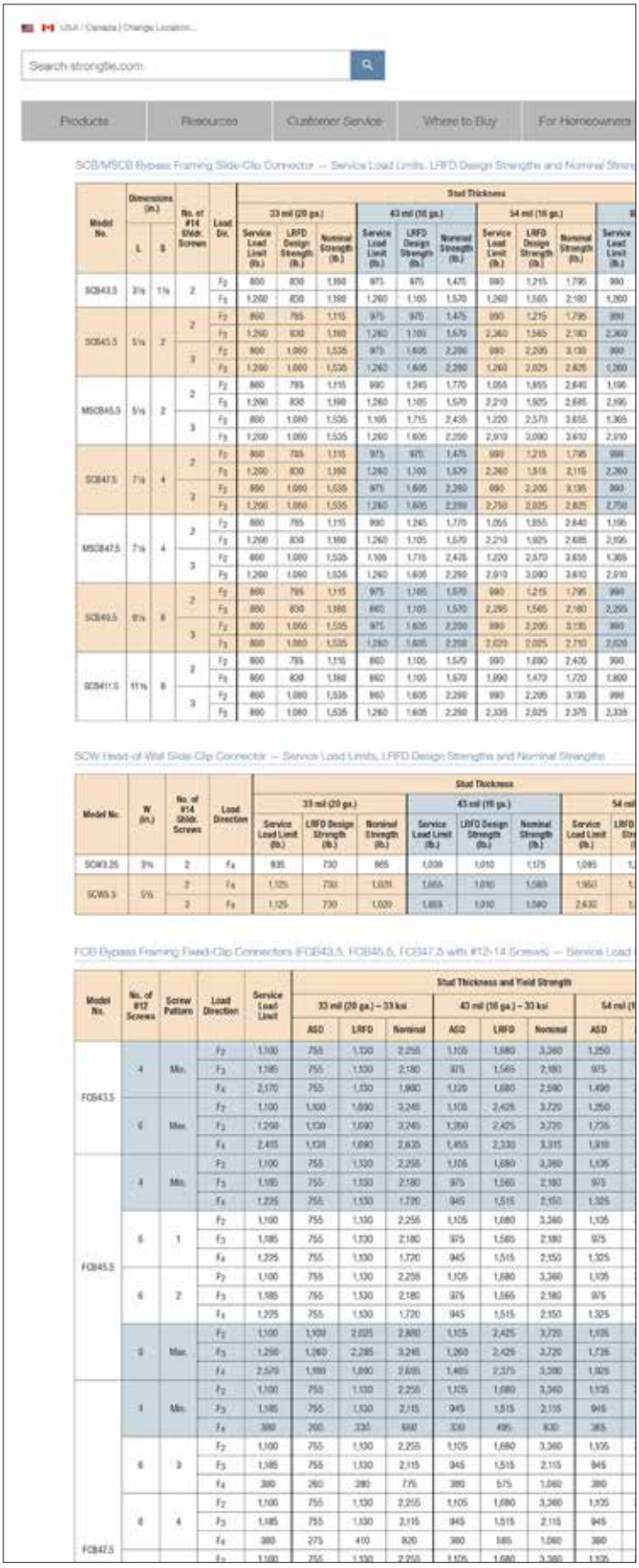

USA / Canada | Change Location...

Search strongtie.com

Products | Resources | Customer Service | Where to Buy | For Homeowners

SCB/MSCB Bypass Framing Slide-Clip Connector — Service Load Limits, LRFD Design Strengths and Nominal Strengths

| Model No. | Dimensions (in.) L | Dimensions (in.) S | No. of #14 Shdr. Screws | Load Dir. | Stud Thickness 33 mil (20 ga.) Service Load Limit (lb.) | 33 mil LRFD Design Strength (lb.) | 33 mil Nominal Strength (lb.) | 43 mil (18 ga.) Service Load Limit (lb.) | 43 mil LRFD Design Strength (lb.) | 43 mil Nominal Strength (lb.) | 54 mil (16 ga.) Service Load Limit (lb.) | 54 mil LRFD Design Strength (lb.) | 54 mil Nominal Strength (lb.) | Service Load Limit (lb.) |
|---|---|---|---|---|---|---|---|---|---|---|---|---|---|---|
| SCB43.5 | 3⅛ | 1⅛ | 2 | $F_2$ | 800 | 830 | 1,180 | 975 | 975 | 1,475 | 990 | 1,215 | 1,795 | 990 |
| | | | | $F_3$ | 1,260 | 830 | 1,180 | 1,260 | 1,105 | 1,570 | 1,260 | 1,565 | 2,180 | 1,260 |
| SCB45.5 | 5⅛ | 2 | 2 | $F_2$ | 800 | 785 | 1,115 | 975 | 975 | 1,475 | 990 | 1,215 | 1,795 | 990 |
| | | | | $F_3$ | 1,260 | 830 | 1,180 | 1,260 | 1,105 | 1,570 | 2,260 | 1,565 | 2,180 | 2,360 |
| | | | 3 | $F_2$ | 800 | 1,080 | 1,535 | 975 | 1,605 | 2,280 | 990 | 2,205 | 3,135 | 990 |
| | | | | $F_3$ | 1,260 | 1,080 | 1,535 | 1,260 | 1,605 | 2,280 | 1,260 | 2,025 | 2,825 | 1,260 |
| MSCB45.5 | 5⅛ | 2 | 2 | $F_2$ | 800 | 785 | 1,115 | 990 | 1,245 | 1,770 | 1,055 | 1,855 | 2,640 | 1,195 |
| | | | | $F_3$ | 1,260 | 830 | 1,180 | 1,260 | 1,105 | 1,570 | 2,210 | 1,925 | 2,685 | 2,195 |
| | | | 3 | $F_2$ | 800 | 1,080 | 1,535 | 1,105 | 1,715 | 2,435 | 1,220 | 2,570 | 3,655 | 1,365 |
| | | | | $F_3$ | 1,260 | 1,080 | 1,535 | 1,260 | 1,605 | 2,280 | 2,910 | 3,080 | 3,610 | 2,910 |
| SCB47.5 | 7⅛ | 4 | 2 | $F_2$ | 800 | 785 | 1,115 | 975 | 975 | 1,475 | 990 | 1,215 | 1,795 | 990 |
| | | | | $F_3$ | 1,260 | 830 | 1,180 | 1,260 | 1,105 | 1,570 | 2,260 | 1,515 | 2,115 | 2,260 |
| | | | 3 | $F_2$ | 800 | 1,080 | 1,535 | 975 | 1,605 | 2,280 | 990 | 2,205 | 3,135 | 990 |
| | | | | $F_3$ | 1,260 | 1,080 | 1,535 | 1,260 | 1,605 | 2,280 | 2,750 | 2,025 | 2,825 | 2,750 |
| MSCB47.5 | 7⅛ | 4 | 2 | $F_2$ | 800 | 785 | 1,115 | 990 | 1,245 | 1,770 | 1,055 | 1,855 | 2,640 | 1,195 |
| | | | | $F_3$ | 1,260 | 830 | 1,180 | 1,260 | 1,105 | 1,570 | 2,210 | 1,925 | 2,685 | 2,195 |
| | | | 3 | $F_2$ | 800 | 1,080 | 1,535 | 1,105 | 1,715 | 2,435 | 1,220 | 2,570 | 3,655 | 1,365 |
| | | | | $F_3$ | 1,260 | 1,080 | 1,535 | 1,260 | 1,605 | 2,280 | 2,910 | 3,080 | 3,610 | 2,910 |
| SCB49.5 | 9⅛ | 8 | 2 | $F_2$ | 800 | 785 | 1,115 | 975 | 1,105 | 1,570 | 990 | 1,215 | 1,795 | 990 |
| | | | | $F_3$ | 800 | 830 | 1,180 | 860 | 1,105 | 1,570 | 2,295 | 1,565 | 2,180 | 2,295 |
| | | | 3 | $F_2$ | 800 | 1,080 | 1,535 | 975 | 1,605 | 2,280 | 990 | 2,205 | 3,135 | 990 |
| | | | | $F_3$ | 800 | 1,080 | 1,535 | 1,260 | 1,605 | 2,280 | 2,020 | 2,025 | 2,710 | 2,020 |
| SCB411.5 | 11⅛ | 8 | 2 | $F_2$ | 800 | 785 | 1,115 | 860 | 1,105 | 1,570 | 990 | 1,690 | 2,405 | 990 |
| | | | | $F_3$ | 800 | 830 | 1,180 | 860 | 1,105 | 1,570 | 1,890 | 1,479 | 1,720 | 1,890 |
| | | | 3 | $F_2$ | 800 | 1,080 | 1,535 | 860 | 1,605 | 2,280 | 990 | 2,205 | 3,135 | 990 |
| | | | | $F_3$ | 800 | 1,080 | 1,535 | 1,260 | 1,605 | 2,280 | 2,335 | 2,025 | 2,375 | 2,335 |

SCW Head-of-Wall Slide-Clip Connector — Service Load Limits, LRFD Design Strengths and Nominal Strengths

| Model No. | W (in.) | No. of #14 Shdr. Screws | Load Direction | Stud Thickness 33 mil (20 ga.) Service Load Limit (lb.) | 33 mil LRFD Design Strength (lb.) | 33 mil Nominal Strength (lb.) | 43 mil (18 ga.) Service Load Limit (lb.) | 43 mil LRFD Design Strength (lb.) | 43 mil Nominal Strength (lb.) | 54 mil Service Load Limit (lb.) |
|---|---|---|---|---|---|---|---|---|---|---|
| SCW3.25 | 3⅛ | 2 | $F_4$ | 935 | 730 | 865 | 1,030 | 1,010 | 1,175 | 1,095 |
| SCW5.5 | 5⅛ | 2 | $F_4$ | 1,125 | 730 | 1,020 | 1,065 | 1,010 | 1,580 | 1,950 |
| | | 3 | $F_4$ | 1,125 | 730 | 1,020 | 1,065 | 1,010 | 1,580 | 2,630 |

FCB Bypass Framing Fixed-Clip Connectors (FCB43.5, FCB45.5, FCB47.5 with #12-14 Screws) — Service Load

| Model No. | No. of #12 Screws | Screw Pattern | Load Direction | Service Load Limit | Stud Thickness and Yield Strength 33 mil (20 ga.) – 33 ksi ASD | 33 mil LRFD | 33 mil Nominal | 43 mil (18 ga.) – 33 ksi ASD | 43 mil LRFD | 43 mil Nominal | 54 mil ASD |
|---|---|---|---|---|---|---|---|---|---|---|---|
| FCB43.5 | 4 | Min. | $F_2$ | 1,100 | 755 | 1,130 | 2,255 | 1,105 | 1,680 | 3,360 | 1,250 |
| | | | $F_3$ | 1,185 | 755 | 1,130 | 2,180 | 975 | 1,565 | 2,180 | 975 |
| | | | $F_4$ | 2,170 | 755 | 1,130 | 1,980 | 1,120 | 1,680 | 2,590 | 1,490 |
| | 6 | Max. | $F_2$ | 1,100 | 1,100 | 1,690 | 3,245 | 1,105 | 2,425 | 3,720 | 1,250 |
| | | | $F_3$ | 1,250 | 1,130 | 1,690 | 3,245 | 1,350 | 2,425 | 3,720 | 1,735 |
| | | | $F_4$ | 2,415 | 1,130 | 1,690 | 2,635 | 1,455 | 2,330 | 3,315 | 1,910 |
| FCB45.5 | 4 | Min. | $F_2$ | 1,100 | 755 | 1,130 | 2,255 | 1,105 | 1,680 | 3,360 | 1,105 |
| | | | $F_3$ | 1,185 | 755 | 1,130 | 2,180 | 975 | 1,565 | 2,180 | 975 |
| | | | $F_4$ | 1,225 | 755 | 1,130 | 1,720 | 945 | 1,515 | 2,150 | 1,325 |
| | 6 | 1 | $F_2$ | 1,100 | 755 | 1,130 | 2,255 | 1,105 | 1,680 | 3,360 | 1,105 |
| | | | $F_3$ | 1,185 | 755 | 1,130 | 2,180 | 975 | 1,565 | 2,180 | 975 |
| | | | $F_4$ | 1,225 | 755 | 1,130 | 1,720 | 945 | 1,515 | 2,150 | 1,325 |
| | 6 | 2 | $F_2$ | 1,100 | 755 | 1,130 | 2,255 | 1,105 | 1,680 | 3,360 | 1,105 |
| | | | $F_3$ | 1,185 | 755 | 1,130 | 2,180 | 975 | 1,565 | 2,180 | 975 |
| | | | $F_4$ | 1,225 | 755 | 1,130 | 1,720 | 945 | 1,515 | 2,150 | 1,325 |
| | 8 | Max. | $F_2$ | 1,100 | 1,100 | 2,025 | 2,880 | 1,105 | 2,425 | 3,720 | 1,105 |
| | | | $F_3$ | 1,250 | 1,260 | 2,285 | 3,245 | 1,260 | 2,425 | 3,720 | 1,735 |
| | | | $F_4$ | 2,570 | 1,180 | 1,890 | 2,685 | 1,485 | 2,375 | 3,280 | 1,925 |
| FCB47.5 | 4 | Min. | $F_2$ | 1,100 | 755 | 1,130 | 2,255 | 1,105 | 1,680 | 3,360 | 1,105 |
| | | | $F_3$ | 1,185 | 755 | 1,130 | 2,115 | 945 | 1,515 | 2,115 | 945 |
| | | | $F_4$ | 380 | 260 | 330 | 660 | 330 | 495 | 830 | 365 |
| | 6 | 3 | $F_2$ | 1,100 | 755 | 1,130 | 2,255 | 1,105 | 1,680 | 3,360 | 1,105 |
| | | | $F_3$ | 1,185 | 755 | 1,130 | 2,115 | 945 | 1,515 | 2,115 | 945 |
| | | | $F_4$ | 380 | 260 | 380 | 775 | 380 | 575 | 1,060 | 380 |
| | 6 | 4 | $F_2$ | 1,100 | 755 | 1,130 | 2,255 | 1,105 | 1,680 | 3,360 | 1,105 |
| | | | $F_3$ | 1,185 | 755 | 1,130 | 2,115 | 945 | 1,515 | 2,115 | 945 |
| | | | $F_4$ | 380 | 275 | 410 | 820 | 380 | 585 | 1,060 | 380 |
| | | | $F_2$ | 1,100 | 755 | 1,130 | 2,255 | 1,105 | 1,680 | 3,360 | 1,105 |

C-CF-2020 ©2020 SIMPSON STRONG-TIE COMPANY INC.

# Raise Your Expectations, Lower Your Installed Costs!



## Utility Clip Connectors

The SSC steel stud connector, the SJC steel joist connector and the SFC steel framing connector, are designed so that a minimum number of clips can be stocked to accommodate a wide array of applications. Prepunched holes and intuitive fastener hole patterns ensure that the structural needs of the designer and the efficient installation goals of the contractor are both satisfied.

## Testing You Can Trust

Simpson Strong-Tie® utility clip connectors have undergone industry-first testing to provide maximum benefit to both the installer and the designer. By testing these connectors as part of a complete system in the applications for which they are intended, rather than only testing the physical capabilities of the connector, Simpson Strong-Tie is able to provide comprehensive allowable loads for real-world conditions. This system-based approach eliminates the need for designers to manually calculate connector performance and anchorage, and provides confidence that designs based on these values have been thoroughly evaluated by the industry leader in structural connector research and development.

| Tested Application | Product Category | | |
|---|---|---|---|
| | SSC 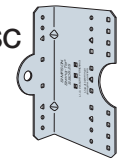 | SJC 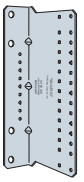 | SFC |
| Steel-to-steel 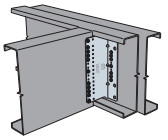 | ✓ | ✓ | ✓ |
| Bypass Framing 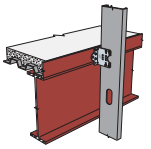 | ✓ | | |
| Headers 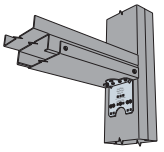 | ✓ | | ✓ |
| Base of Jamb 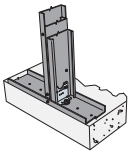 | ✓ | | |
| Rafter 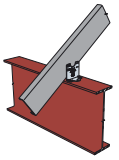 | ✓ | | |
| Kneewall 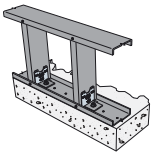 | ✓ | | |
| U-Channel Bridging 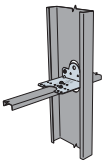 | ✓ | | ✓ |
| Kicker 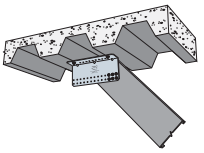 | | ✓ | |
| Soffit Hanger 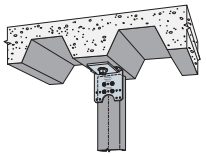 | ✓ | ✓ | |

C-CF-2020 ©2020 SIMPSON STRONG-TIE COMPANY INC.

# Innovative Design Lets You Work Smarter — Not Harder!

Simpson Strong-Tie® utility clip connectors have been designed with both the contractor and designer in mind. Connector dimensions and fastener/anchor locations have been developed to maximize design flexibility and installation efficiency.

## Intelligent Connector Dimensions

### SSC Steel Stud Connectors

Designed to accommodate open-side connections with flanges up to 3" wide and stiffener lips up to ¾" *

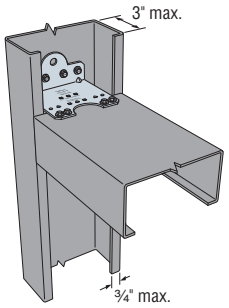


### SJC Steel Joist Connectors

Designed to accommodate open-side connections with flanges up to 3½" wide and stiffener lips up to ¾"

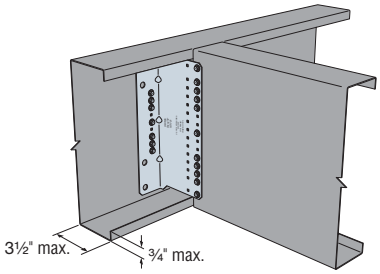


### SFC Steel Framing Connectors

Designed to accommodate open-side connections with stiffener lips up to ¾" long**

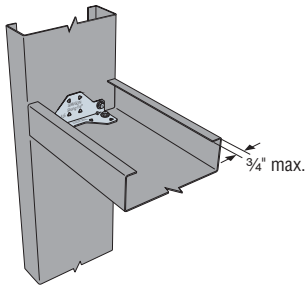


*SSC2.25 clips will accommodate 2" wide flange and ⅝" stiffener lips.
**SFC2.25 clips will accommodate ⅝" long stiffener lips.

**For detailed product dimensions, refer to p. 81 for SSC, p. 89 for SJC and p. 92 for SFC.**

## Intuitive Fastener Patterns

**SSC and SJC** connectors include prepunched holes for ⅜" diameter anchors that enable easy anchorage to concrete.

**SSC and SJC** anchorage leg also includes prepunched holes for #10 self-drilling screws.

**SSC and SJC** clips include round and triangle holes for minimum and maximum tabulated load values. Square holes are also provided, and can be combined with round and triangle holes for custom screw patterns per installation needs.

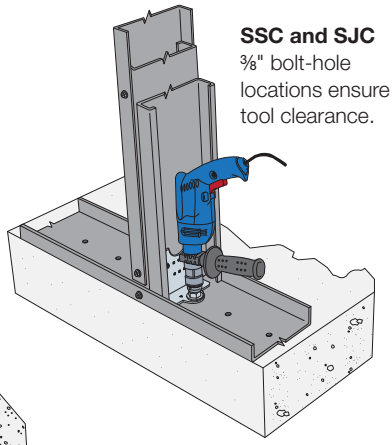

**SSC and SJC** ⅜" bolt-hole locations ensure tool clearance.

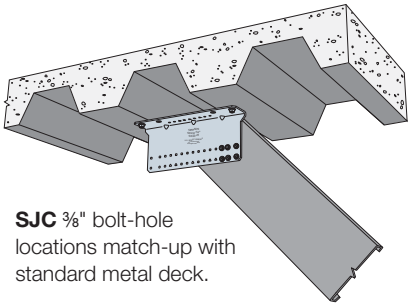

**SJC** ⅜" bolt-hole locations match-up with standard metal deck.

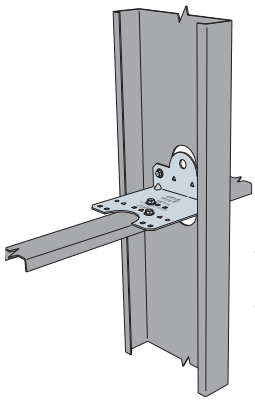

**SSC and SFC** hole locations accommodate u-channel.

C-CF-2020 ©2020 SIMPSON STRONG-TIE COMPANY INC.

# **SSC** Steel-Stud Connector

SIMPSON Strong-Tie®



***This product is preferable to similar connectors because of a) easier installation, b) higher loads, c) lower installed cost, or a combination of these features.***

SSC connectors are versatile utility clips ideal for a variety of stud-to-stud and stud-to-structure applications in cold-formed steel construction. The clips have been designed to enable easy installation on the open side of studs or joists with flanges up to 3" long and return lips up to ¾". A wide pattern of strategic fastener locations allows the SSC to accommodate a variety of traditional and custom designs.

**Features:**

- Prepunched holes reduce installation cost by eliminating predrilling
- Intuitive fastener hole positions ensure accurate clip installation in accordance with design, support a wide range of design and application requirements and provide installation flexibility
- Angle lengths accommodate either hard-side or soft-side attachment for studs and joists with return lips up to ¾"*
- 4" leg length enables soft-side connections for studs and joists with flanges up to 3"*
- Also suitable for u-channel bridging

**Product Information:**

**Material:** LSSC — 54 mil (50 ksi); SSC — 68 mil (50 ksi); MSSC — 97 mil (50 ksi)

**Finish:** Galvanized (G90)

**Installation:** Use all specified fasteners/anchors

**Codes:** See p. 11 for Code Reference Key Chart

**For detailed product dimensions, refer to p. 81.**

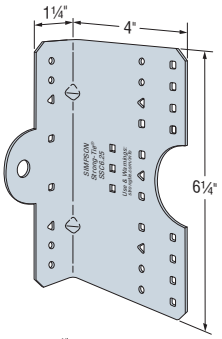


**SSC6.25**
*(LSSC6.25, MSSC6.25 similar)*

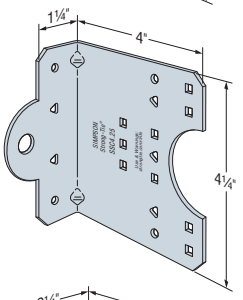


**SSC4.25**
*(LSSC4.25, MSSC4.25 similar)*

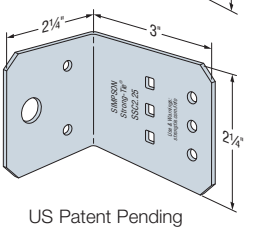


**SSC2.25**
*(MSSC2.25 similar)*

US Patent Pending

## Ordering Information

| Model No. | Ordering SKU | Package Quantity |
|---|---|---|
| SSC2.25 | SSC2.25-R125 | Bucket of 125 |
| MSSC2.25 | MSSC2.25-R90 | Bucket of 90 |
| LSSC4.25 | LSSC4.25-R50 | Bucket of 50 |
| SSC4.25 | SSC4.25-R50 | |
| MSSC4.25 | MSSC4.25-R50 | |
| LSSC6.25 | LSSC6.25-R30 | Bucket of 30 |
| SSC6.25 | SSC6.25-R30 | |
| MSSC6.25 | MSSC6.25-R30 | |

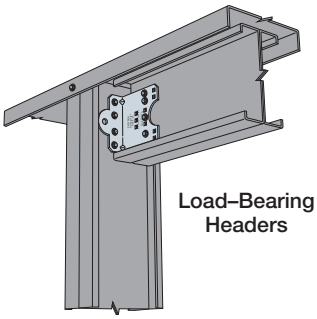

Load–Bearing Headers

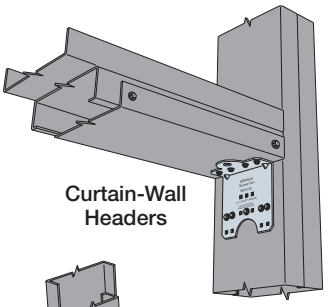

Curtain-Wall Headers

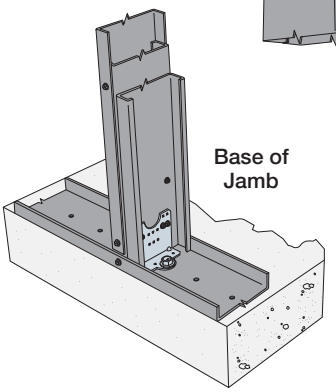

Base of Jamb

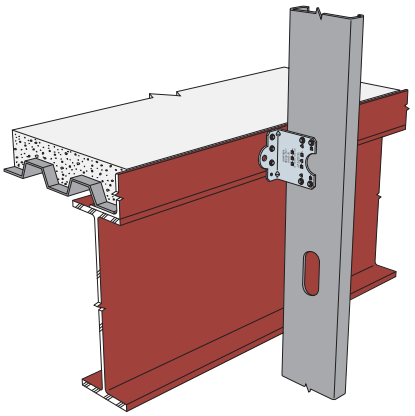

Bypass Framing

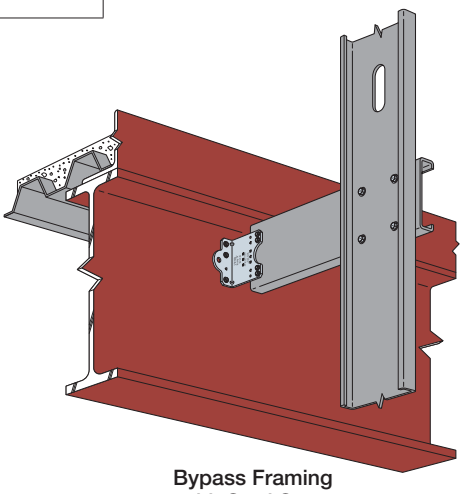

Bypass Framing with Stud Strut

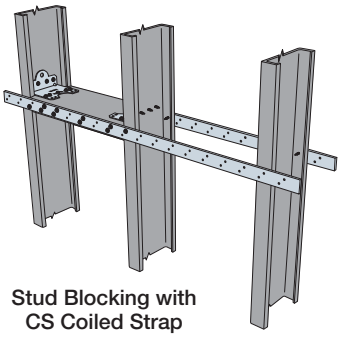

Stud Blocking with CS Coiled Strap

*SSC2.25 clips will accommodate 2" wide flange and ⅝" stiffener lips.

C-CF-2020 ©2020 SIMPSON STRONG-TIE COMPANY INC.

# **SSC** Steel-Stud Connector



## SSC Connectors — Steel-to-Steel Allowable Loads

| Model No. | Connector Material Thickness mil (ga.) | Clip Length (in.) | Framing Member Depth (in.) | Fasteners | | | Allowable $F_4$ Load (lb.) | | | | Code Ref. |
|---|---|---|---|---|---|---|---|---|---|---|---|
| | | | | Pattern[1] | Carried Member | Carrying Member | Minimum Member Thickness | | | Maximum Connector Load[3] | |
| | | | | | | | 33 mil (20 ga.) | 43 mil (18 ga.) | 54 mil (16 ga.) | | |
| SSC2.25 | 68 (14) | 2¼ | 3⅝ | Min. | (3) #10 | (2) #10 | 165 | 225 | 345 | 690 | IBC |
| MSSC2.25 | 97 (12) | 2¼ | 3⅝ | Min. | (3) #10 | (2) #10 | 165 | 225 | 345 | 690 | |
| LSSC4.25 | 54 (16) | 4¼ | 6 | Min. | (2) #10 | (2) #10 | 215 | 440 | 675 | 1,615 | |
| | | | | Max. | (5) #10 | (4) #10 | 215 | 440 | 725 | | |
| | | | | Outer | (4) #10 | (4) #10 | 200 | 310 | 520 | | |
| SSC4.25 | 68 (14) | 4¼ | 6 | Min. | (2) #10 | (2) #10 | 355 | 525 | 890 | 1,615 | |
| | | | | Max. | (5) #10 | (4) #10 | 365 | 600 | 1,005 | | |
| | | | | Outer | (4) #10 | (4) #10 | 235 | 330 | 625 | | |
| MSSC4.25 | 97 (12) | 4¼ | 6 | Min. | (2) #10 | (2) #10 | 355 | 525 | 890 | 1,615 | |
| | | | | Max. | (5) #10 | (4) #10 | 365 | 600 | 1,005 | | |
| | | | | Outer | (4) #10 | (4) #10 | 235 | 330 | 625 | | |
| LSSC6.25 | 54 (16) | 6¼ | 8 | Min. | (4) #10 | (4) #10 | 265 | 660 | 1,190 | 2,590 | |
| | | | | Max. | (7) #10 | (6) #10 | 265 | 660 | 1,190 | | |
| | | | | Outer | (6) #10 | (4) #10 | 270 | 375 | 695 | | |
| SSC6.25 | 68 (14) | 6¼ | 8 | Min. | (4) #10 | (4) #10 | 385 | 720 | 1,190 | 2,590 | |
| | | | | Max. | (7) #10 | (6) #10 | 385 | 720 | 1,190 | | |
| | | | | Outer | (6) #10 | (4) #10 | 270 | 460 | 725 | | |
| MSSC6.25 | 97 (12) | 6¼ | 8 | Min. | (4) #10 | (4) #10 | 385 | 720 | 1,190 | 2,590 | |
| | | | | Max. | (7) #10 | (6) #10 | 385 | 720 | 1,365 | | |
| | | | | Outer | (6) #10 | (4) #10 | 270 | 460 | 725 | | |

1. Min. fastener quantity and load values — fill all round holes; Max. fastener quantity and load values — fill all round and triangular holes; Outer fastener quantity and load values — see illustrations for fastener placement.
2. Allowable loads are based on bracing of the members located within 12" of the connection.
3. Maximum allowable load for connector that may not be exceeded when designing custom installations. designer is responsible for member and fastener design.
4. See *Fastening Systems* catalog (C-F-2019) on **strongtie.com** for more information on Simpson Strong-Tie fasteners.
5. Reference pp. 82–84 for supplemental information and alternate screw patterns.

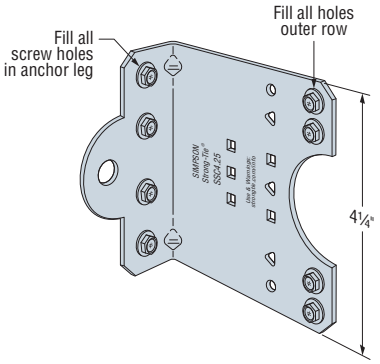


**SSC4.25 — Outer Fastener Pattern**
*(LSSC4.25 and MSSC4.25 similar)*

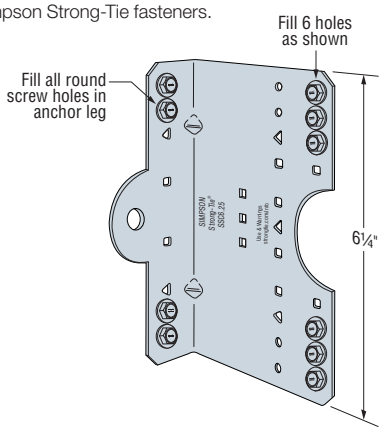


**SSC6.25 — Outer Fastener Pattern**
*(LSSC6.25 and MSSC6.25 similar)*

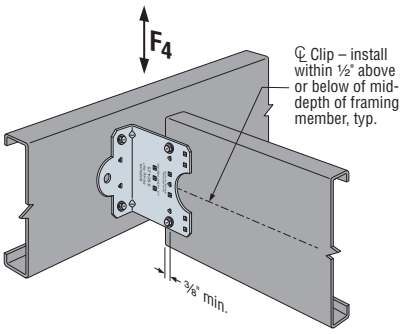


**Typical SSC4.25 Installation with Min. Quantity**

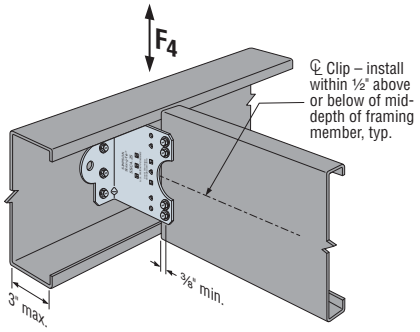


**SSC Installation with Carried Member Fasteners in Outer Row**

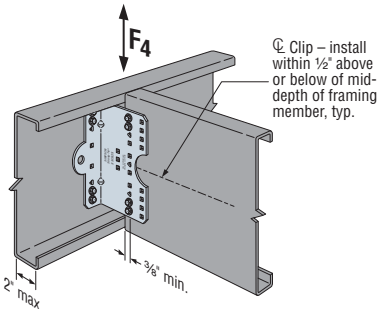


**SSC6.25 Installation with Min. Quantity**

C-CF-2020 ©2020 SIMPSON STRONG-TIE COMPANY INC.

# **SSC** Steel-Stud Connector



## SSC Connectors — Bypass Framing Allowable Loads (lb.)

| Model No. | Connector Material Thickness mil (ga.) | Clip Length (in.) | Fasteners[1,4] | | Stud Thickness | | | | | | | | | | | | Code Ref. |
|---|---|---|---|---|---|---|---|---|---|---|---|---|---|---|---|---|---|
| | | | | | 33 mil (20 ga.) | | | | 43 mil (18 ga.) | | | | 54 mil (16 ga.) | | | | |
| | | | Anchorage[2] | Stud | $F_1$[3] | $F_2$ | $F_3$ | $F_4$ | $F_1$[3] | $F_2$ | $F_3$ | $F_4$ | $F_1$[3] | $F_2$ | $F_3$ | $F_4$ | |
| SSC4.25 | 68 (14) | 4¼ | (3) #10 | (4) #10 | 40 | 705 | 705 | 700 | 40 | 870 | 1,050 | 850 | 40 | 935 | 1,210 | 850 | IBC |
| | | | (3) PDPAT-62K | (4) #10 | 40 | 705 | 705 | 700 | 40 | 780 | 1,050 | 850 | 40 | 780 | 1,210 | 850 | — |
| MSSC4.25 | 97 (12) | 4¼ | (3) #10 | (4) #10 | 105 | 705 | 705 | 705 | 105 | 1,050 | 1,050 | 880 | 105 | 1,385 | 1,210 | 880 | IBC |
| | | | (3) PDPAT-62K | (4) #10 | 105 | 705 | 705 | 705 | 105 | 780 | 1,050 | 880 | 105 | 780 | 1,210 | 880 | — |

1. See illustration for fastener placement.
2. Allowable loads are based on anchors installed in minimum 3⁄16"-thick structural steel with $F_y$ = 36 ksi.
3. Allowable loads based on in-plane loads applied at the centroid of the fasteners to the stud, with no rotational restraint of stud.
4. See *Fastening Systems* catalog (C-F-2019) on **strongtie.com** for more information on Simpson Strong-Tie fasteners.

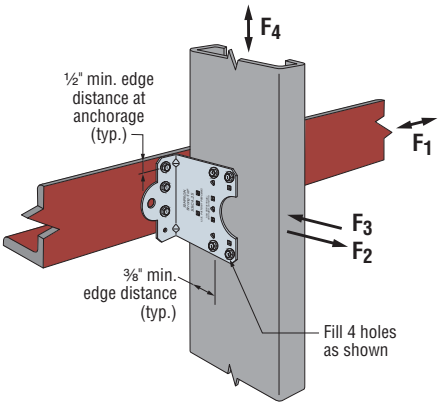


Typical SSC Installation

## SSC Connectors — Headers Allowable Loads

| Model No. | Connector Material Thickness mil (ga.) | Clip Length (in.) | Jamb Stud Depth (in.) | Fasteners[4] | | | Jamb and Header Thickness mil (ga.) | Allowable $F_3$ Load (lb.) | | Allowable $F_4$ Load (lb.) | Code Ref. |
|---|---|---|---|---|---|---|---|---|---|---|---|
| | | | | Pattern | Jamb | Header | | Nested Stud and Track Header[3] | Back to Back Header[2] | | |
| LSSC4.25 | 54 (16) | 4¼ | 6 | Max. | (5) #10 | (4) #10 | 33 (20) | 140 | 455 | 215 | IBC |
| | | | | | | | 43 (18) | 220 | 660 | 440 | |
| SSC4.25 | 68 (14) | 4¼ | 6 | Max. | (5) #10 | (4) #10 | 54 (16) | 375 | 1,055 | 1,005 | |
| | | | | | | | 68 (14) | 570 | 1,055 | 1,005 | |
| LSSC6.25 | 54 (16) | 6¼ | 8 | Max. | (7) #10 | (6) #10 | 33 (20) | 160 | 455 | 265 | |
| | | | | | | | 43 (18) | 250 | 730 | 660 | |
| SSC6.25 | 68 (14) | 6¼ | 8 | Max. | (7) #10 | (6) #10 | 54 (16) | 410 | 1,110 | 1,190 | |
| | | | | | | | 68 (14) | 640 | 1,110 | 1,190 | |

1. Max. fastener quantity and load values — fill all round and triangular holes.
2. Designer is responsible for checking web crippling of the header and reducing allowable loads accordingly.
3. Also applies to box header per illustration below.
4. See *Fastening Systems* catalog (C-F-2019) on **strongtie.com** for more information on Simpson Strong-Tie fasteners.

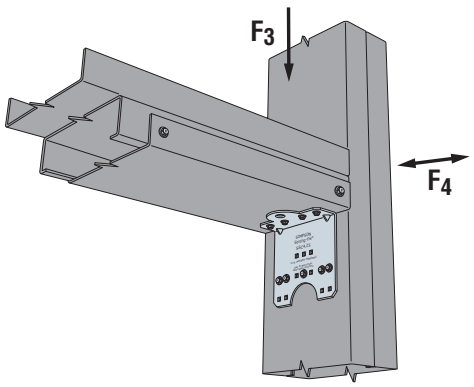


Nested Stud and Track

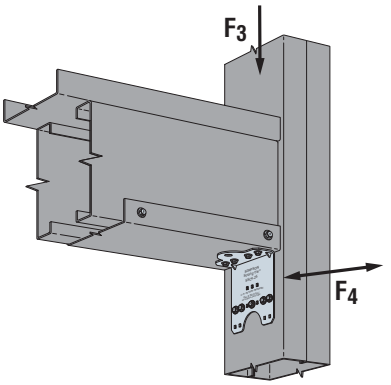


Box Header

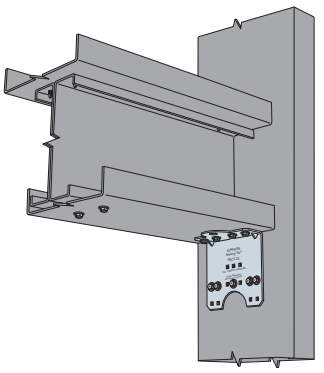

Back-to-Back Header

C-CF-2020 ©2020 SIMPSON STRONG-TIE COMPANY INC.

# **SSC** Steel-Stud Connector



## SSC Connectors — Base of Jamb Allowable Loads

| Model No. | Connector Material Thickness mil (ga.) | Clip Length (in.) | Stud Member Depth (in.) | Fasteners | | Stud Thickness mil (ga.) | Allowable $F_4$ Load (lb.) | Code Ref. |
|---|---|---|---|---|---|---|---|---|
| | | | | Anchor Diameter | Stud Fasteners[3] | | | |
| SSC2.25 | 68 (14) | 2¼ | 3⅝ | ⅜ | (3) #10 | 33 (20) | 390 | IBC |
| | | | | | | 43 (18) | 605 | |
| | | | | | | 54 (16) | 940 | |
| SSC4.25 | 68 (14) | 4¼ | 6 | ⅜ | (5) #10 | 33 (20) | 420 | |
| | | | | | | 43 (18) | 685 | |
| | | | | | | 54 (16) | 975 | |
| SSC6.25 | 68 (14) | 6¼ | 8 | ⅜ | (7) #10 | 33 (20) | 470 | |
| | | | | | | 43 (18) | 715 | |
| | | | | | | 54 (16) | 1,020 | |

1. Allowable loads are based on minimum 33 mil (20 ga.) track for 33 mil (20 ga.) and 43 mil (18 ga.) studs, and minimum 43 mil (18 ga.) track for 54 mil (16 ga.) studs, with one #10 screw into each stud flange.
2. Allowable loads assume adequate torsional bracing is provided. Bracing design is the responsibility of the designer.
3. See illustrations for fastener placement.
4. Designer is responsible for anchorage design.
5. See *Fastening Systems* catalog (C-F-2019) on **strongtie.com** for more information on Simpson Strong-Tie fasteners.

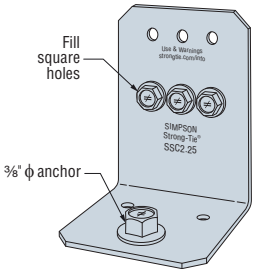


**SSC2.25 Fastener Pattern**

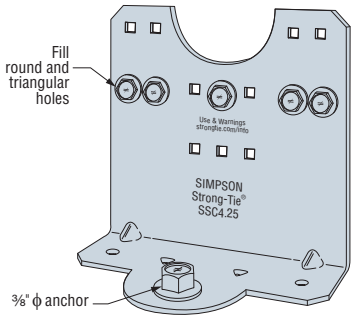


**SSC4.25 Fastener Pattern**

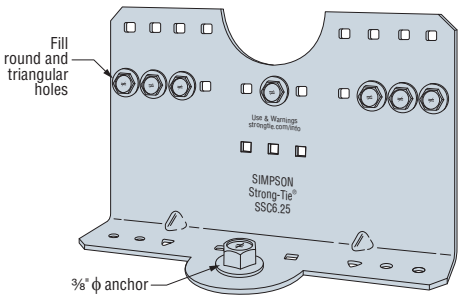


**SSC6.25 Fastener Pattern**

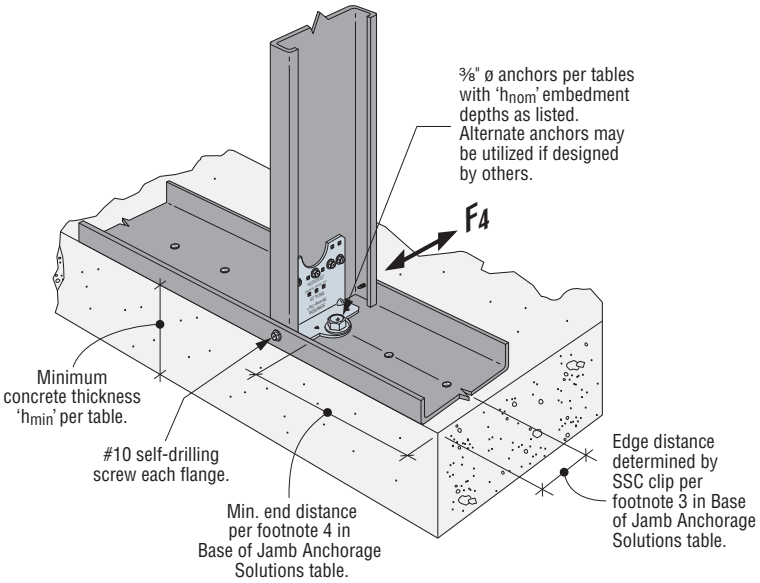


**Typical SSC Installation**
*(Note: This figure references the table on the following page.)*

**Titen HD®** Screw Anchor | **Strong-Bolt® 2** Wedge Anchor | **AT-XP®** Adhesive

For more information, see *Anchoring, Fastening and Restoration Systems for Concrete and Masonry* catalog (C-A-2018).

C-CF-2020 ©2020 SIMPSON STRONG-TIE COMPANY INC.

# **SSC** Steel-Stud Connector



## Base of Jamb Anchorage Solutions

| Uncracked Concrete, Wind and Seismic in SDC A&B[8] | | | | | | |
|---|---|---|---|---|---|---|
| Model No. | Minimum Concrete Thickness ($h_{min}$) (in.) | ⅜" Diameter Simpson Strong-Tie® Anchor Type | Nominal Embedment Depth ($h_{nom}$) (in.) | Allowable Anchor Load, $F_4$ (lb.) | | |
| | | | | 3,000 psi SLWC | 3,000 psi NWC | 4,000 psi NWC |
| SSC2.25 | 4 | Titen HD® | 2½ | 275 | 455 | 530 |
| | 6 | Titen HD | 3¼ | 290 | 485 | 560 |
| | | SET-XP® | 4 | 345 | 510 | 590 |
| | | AT-XP® | 4 | 345 | 510 | 590 |
| SSC4.25 | 4 | Titen HD | 2½ | 550 | 920 | 975 |
| | 6 | Titen HD | 3¼ | 620 | 975 | 975 |
| | | SET-XP | 4 | 735 | 880 | 880 |
| | | AT-XP | 4 | 735 | 880 | 880 |
| SSC6.25 | 4 | Titen HD | 2½ | 735 | 1,020 | 1,020 |
| | 6 | Titen HD | 3¼ | 960 | 1,020 | 1,020 |
| | | SET-XP | 4 | 880 | 880 | 880 |
| | | AT-XP | 4 | 880 | 880 | 880 |

| Cracked Concrete, Wind and Seismic in SDC A&B[8] | | | | | | |
|---|---|---|---|---|---|---|
| Model No. | Minimum Concrete Thickness ($h_{min}$) (in.) | ⅜" Diameter Simpson Strong-Tie® Anchor Type | Nominal Embedment Depth ($h_{nom}$) (in.) | Allowable Anchor Load, $F_4$ (lb.) | | |
| | | | | 3,000 psi SLWC | 3,000 psi NWC | 4,000 psi NWC |
| SSC2.25 | 4 | Titen HD | 2½ | 195 | 325 | 375 |
| | 6 | Titen HD | 3¼ | 210 | 345 | 400 |
| | | SET-XP | 4 | 245 | 360 | 420 |
| | | AT-XP | 4 | 245 | 360 | 420 |
| SSC4.25 | 4 | Titen HD | 2½ | 395 | 655 | 760 |
| | 6 | Titen HD | 3¼ | 445 | 740 | 855 |
| | | SET-XP | 4 | 525 | 775 | 880 |
| | | AT-XP | 4 | 525 | 775 | 880 |
| SSC6.25 | 4 | Titen HD | 2½ | 525 | 875 | 1,010 |
| | 6 | Titen HD | 3¼ | 685 | 1,020 | 1,020 |
| | | SET-XP | 4 | 810 | 880 | 880 |
| | | AT-XP | 4 | 810 | 880 | 880 |

| Cracked Concrete, Seismic in SDC C through F[9] | | | | | | |
|---|---|---|---|---|---|---|
| Model No. | Minimum Concrete Thickness ($h_{min}$) (in.) | ⅜" Diameter Simpson Strong-Tie® Anchor Type | Nominal Embedment Depth ($h_{nom}$) (in.) | Allowable Anchor Load, $F_4$ (lb.) | | |
| | | | | 3,000 psi SLWC | 3,000 psi NWC | 4,000 psi NWC |
| SSC2.25 | 4 | Titen HD | 2½ | 90 | 150 | 175 |
| | 6 | Titen HD | 3¼ | 95 | 160 | 185 |
| | | SET-XP | 4 | 115 | 170 | 195 |
| | | AT-XP | 4 | 115 | 170 | 195 |
| SSC4.25 | 4 | Titen HD | 2½ | 185 | 305 | 355 |
| | 6 | Titen HD | 3¼ | 205 | 345 | 400 |
| | | SET-XP | 4 | 245 | 355 | 355 |
| | | AT-XP | 4 | 245 | 350 | 350 |
| SSC6.25 | 4 | Titen HD | 2½ | 245 | 410 | 470 |
| | 6 | Titen HD | 3¼ | 320 | 480 | 480 |
| | | SET-XP | 4 | 355 | 355 | 355 |
| | | AT-XP | 4 | 350 | 350 | 350 |

1. Allowable anchor capacities have been determined using ACI 318-14 Chapter 17 calculations with the minimum concrete compressive strength, $f'_c$ and slab thickness listed. Sand-lightweight concrete is abbreviated as "SLWC" while normal-weight concrete is abbreviated as "NWC".
2. Nominal Embedment Depth/Effective Embedment Depth relationships:
   - ⅜" Titen HD® in 4" Slab : 2.50" ($h_{nom}$) / 1.77" ($h_{ef}$)
   - ⅜" Titen HD in 6" Slab or thicker : 3.25" ($h_{nom}$) / 2.40" ($h_{ef}$)
   - SET-XP® or AT-XP® Adhesive with ⅜" F1554 Gr. 36 All-Thread Rod in 6" Slab or thicker : 4.0" ($h_{nom}$) = 4" ($h_{ef}$)
3. Edge distances are assumed to be 1.81", 3.0" and 4.0" (½ of stud width) as determined for 3⅝", 6" and 8" studs, respectively.
4. End distances are assumed as 1.5 x Min. Edge Distance in one direction and 'N/A' in the other direction. See figure on p. 79.
5. Load values are for a single anchor based on ACI 318-14, condition B, load factors from ACI 318-14 Section 5.3, no supplemental edge reinforcement, $\Psi_{c,V}$ = 1.0 for cracked concrete and periodic special inspection. Reference ICC-ES or IAPMO-UES evaluation reports for further information.
6. Load values are based on a short-term temperature range of 150°F and 180°F for SET-XP and AT-XP. Long-term temperature range is assumed to be 110°F for both SET-XP and AT-XP. Dry hole conditions are assumed. Other conditions may be evaluated using Anchor Designer™ Software for ACI 318, ETAG and CSA. See **strongtie.com/software**.
7. Allowable Stress Design (ASD) values were determined by multiplying calculated LRFD capacities by a conversion factor, Alpha ($\alpha$), of 0.7 for seismic loads and 0.6 for wind loads. ASD values for other load combinations may be determined using alternate conversion factors.
8. Tabulated allowable ASD loads for Wind and Seismic in SDC A&B are based on using wind conversion factors and may be increased by 1.17 for SDC A&B only.
9. Allowable loads have been divided by an Omega ($\Omega$) seismic factor of 2.5 for brittle failure as required by ACI 318-14 Chapter 17.
10. Allowable $F_4$ load based on loading direction towards the edge of slab.
11. Tabulated capacities are based on maximum allowable anchorage loads only. The capacity of the connection system shall be the minimum of the tabulated value and the allowable load value from the SSC Connectors: Base of Jamb Allowable Load Tables.

C-CF-2020 ©2020 SIMPSON STRONG-TIE COMPANY INC.

# **SSC** Steel-Stud Connector

## SSC Connectors — Rafters Allowable Loads

| Model No. | Connector Material Thickness mil (ga.) | Clip Length (in.) | Fasteners[1,4] | | Allowable Load (lb.) | | | Code Ref. |
|---|---|---|---|---|---|---|---|---|
| | | | Anchorage to Steel[2] | Supported Member | 43 mil (18 ga.) | | | |
| | | | | | $F_2$ | $F_3$ | $F_4$ | |
| SSC4.25 | 68 (14) | 4¼ | (2) #12–24 | (5) #10 | 710 | 1,075 | 595 | IBC |
| | | | (4) 0.157" PDPAT | (5) #10 | 1,020 | 1,075 | 630 | |
| MSSC4.25 | 97 (12) | 4¼ | (2) #12–24 | (5) #10 | 710 | 1,335 | 595 | |
| | | | (4) 0.157" PDPAT | (5) #10 | 1,025 | 1,335 | 815 | |

1. See illustrations for fastener placement.
2. Allowable loads are based on anchors installed in minimum 3⁄16"-thick structural steel with $F_y$ = 36 ksi.
3. Allowable loads are based on a 6"-deep member. For deeper members, designer must consider web crippling of the member and reduce loads accordingly.
4. See *Fastening Systems* catalog (C-F-2019) on **strongtie.com** for more information on Simpson Strong-Tie fasteners.

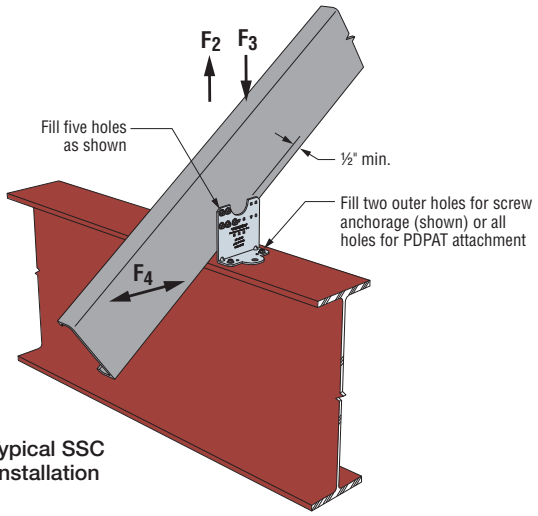


Typical SSC Installation

## SSC Utility Clip Dimensions

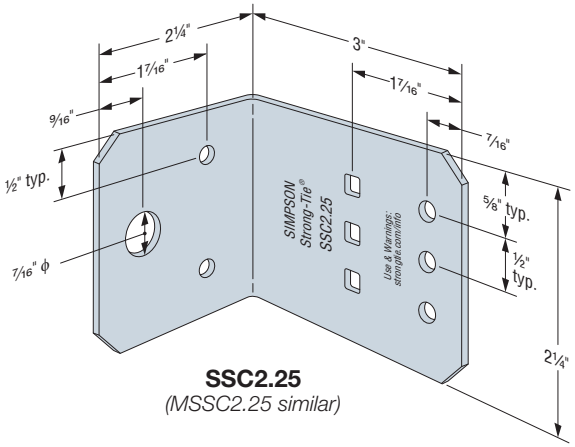


**SSC2.25**
*(MSSC2.25 similar)*

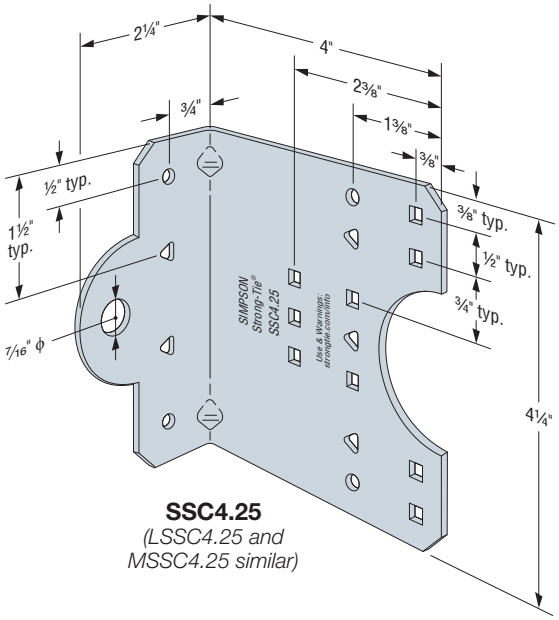


**SSC4.25**
*(LSSC4.25 and MSSC4.25 similar)*

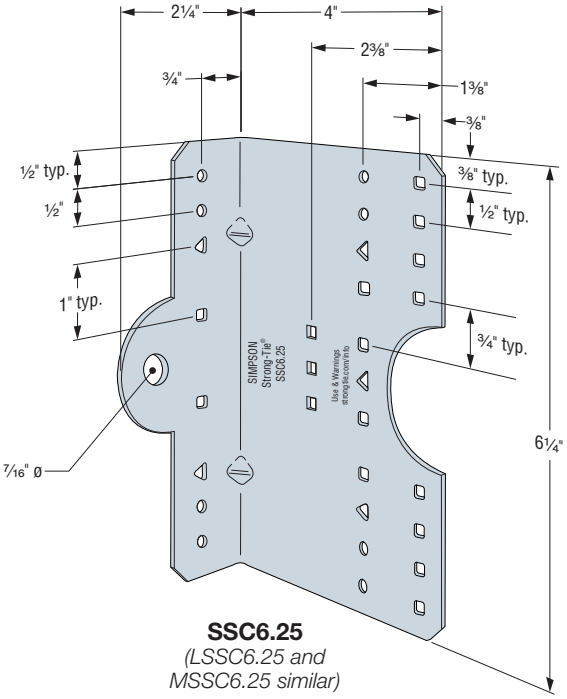


**SSC6.25**
*(LSSC6.25 and MSSC6.25 similar)*

C-CF-2020 ©2020 SIMPSON STRONG-TIE COMPANY INC.

# **SSC** Supplemental Information



The following SSC supplemental information is given to help designers with value-engineered solutions for our SSC connectors. Loads are given for fastener patterns other than our standard “min.” (fill all round holes) and “max.” (fill all round and triangle holes). The tables give service, ASD, LRFD and nominal loads.

## Table 1: SSC Screw Patterns

| | | | | |
|---|---|---|---|---|
| SSC2.25, MSSC2.25 | Pattern “Min.” | Pattern A | Pattern B | |
| | 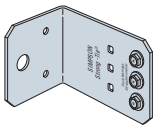 | 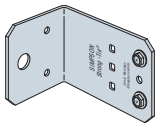 | 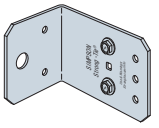 | |
| | Pattern C | Pattern D | Pattern E | |
| | 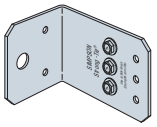 | 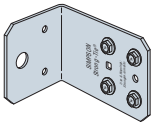 | 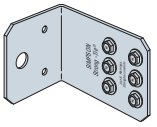 | |
| LSSC4.25, SSC4.25, MSSC4.25 | Pattern “Min.” | Pattern “Max.” | Pattern “Outer” | |
| | 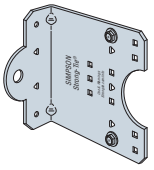 | 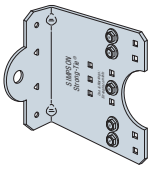 | 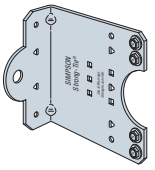 | |
| | Pattern F | Pattern G | Pattern H | Pattern I |
| | 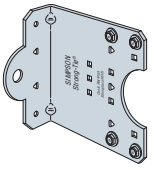 | 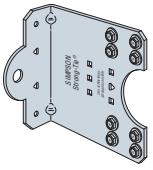 | 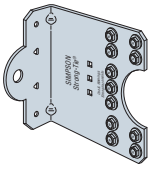 | 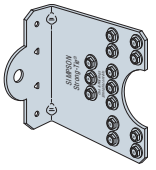 |
| LSSC6.25 SSC6.25 MSSC6.25 | Pattern “Min.” | Pattern “Max.” | Pattern “Outer” | |
| | 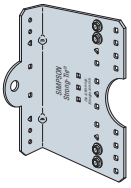 | 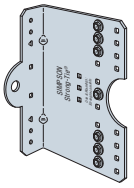 | 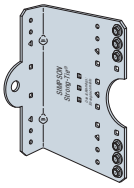 | |
| | Pattern J | Pattern K | Pattern L | |
| | 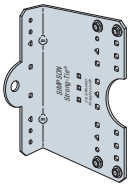 | 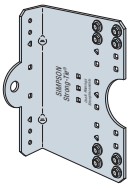 | 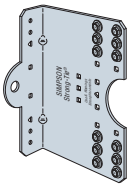 | |
| | Pattern M | Pattern N | Pattern O | |
| | 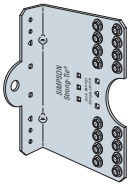 | 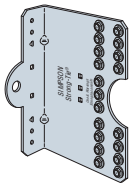 | 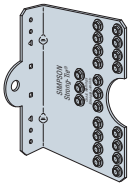 | |

C-CF-2020 ©2020 SIMPSON STRONG-TIE COMPANY INC.

# **SSC** Supplemental Information





## Notes for Tables 2 and 3

1. Calculated values are per AISI RP15-2, AISI S-100, or generally accepted industry standards. Shaded values for $F_4$ are derived from test data. Whenever possible, unshaded $F_4$ values are based on the maximum calculated value and applicable tested value.
2. The tabulated values do not account for anchorage to the support. Anchor strength must be calculated separately and may reduce the capacity of the connection when compared to the tabulated values.
3. Tabulated values do not include shear, web crippling, buckling, or other local effects in the member. The designer must check member limit states separately.
4. For load combinations that include $F_4$ and/or $F_2$ and/or $F_3$, use an appropriate interaction equation.
5. #10–16 screws shall have $P_{ss} \geq 1{,}620$ lb. Calculated values are per AISI S-100. Screws must be installed with three (min.) exposed threads.
6. The number of screws is for one clip leg that is attached to the supported stud.
7. For the minimum screw pattern, fill all round holes. For the maximum screw pattern, fill all round and triangle holes. Reference p. 82.
8. In addition to calculations of net and gross section tension, and screw shear of the clip leg attached to the stud, $F_2$ values are also calculated for weak-axis bending of the anchored clip leg with the line of bending at the smaller anchor holes. The designer is responsible for calculating pullover, pullout, and tension strength of the anchors, and this may reduce $F_2$ strength compared to the tabulated values.
9. $F_3$ values are computed using the plate buckling provisions of AISI RP15-2.
10. For the $F_4$ calculated values, it's assumed that the connection eccentricity is taken by screws in the supported stud.
11. Service load limits for $F_2$ and $F_3$ are not given since there are no generally accepted industry methods available to compute these values. $F_4$ service load limits are based on AISI Research Report RP15-2 for ⅛" deflection or applicable test data.
12. For 50 ksi studs, 68 mil (14 ga.) and thicker, use tabulated values for 54 mil (16 ga.) — 50 ksi studs.

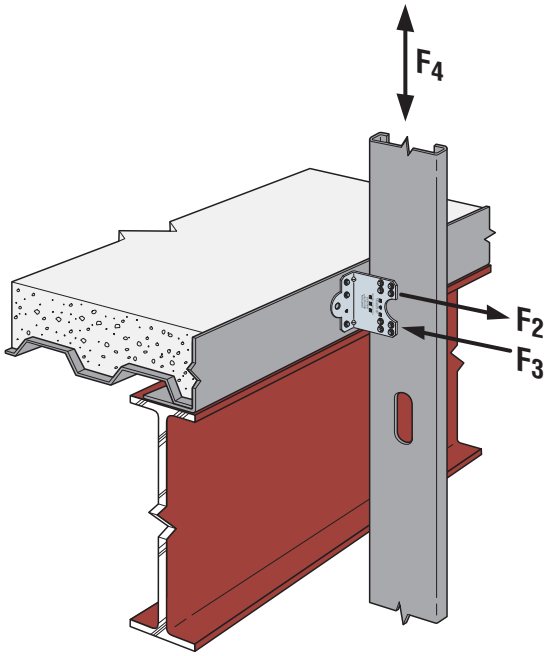


**Installation Example #1 —**
**SSC4.25 Typical**
**Bypass Framing Installation**

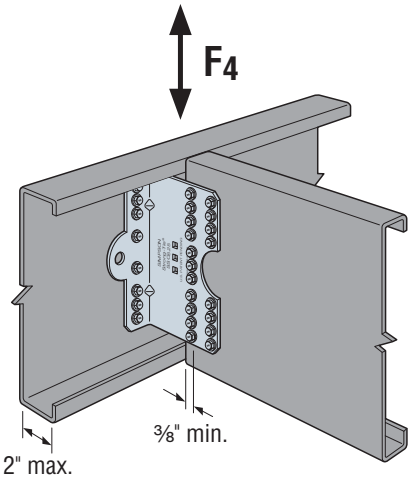


**Installation Example #2 —**
**SSC6.25 Typical**
**Joist-to-Girder Installation**

C-CF-2020 ©2020 SIMPSON STRONG-TIE COMPANY INC.

# **SSC** Supplemental Information



## Table 2: SSC Steel Stud Connectors (SSC2.25, MSSC2.25, LSSC4.25 and SSC4.25) — Allowable Loads (lb.)

| Model No. | No. of #10 Screws | Screw Pattern | Stud Thickness and Yield Strength | | | | | | | | |
|---|---|---|---|---|---|---|---|---|---|---|---|
| | | | 33 mil (20 ga.) – 33 ksi | | | 43 mil (18 ga.) – 33 ksi | | | 54 mil (16 ga.) – 50 ksi | | |
| | | | $F_2$ | $F_3$ | $F_4$ | $F_2$ | $F_3$ | $F_4$ | $F_2$ | $F_3$ | $F_4$ |
| SSC2.25 | 3 | Min. | 235 | 455 | 165 | 235 | 455 | 225 | 235 | 455 | 345 |
| | 2 | A | | 330 | 65 | | 355 | 100 | | 355 | 195 |
| | 2 | B | | 330 | 100 | | 465 | 155 | | 465 | 310 |
| | 3 | C | | 495 | 165 | | 600 | 225 | | 600 | 345 |
| | 4 | D | | 465 | 180 | | 465 | 275 | | 465 | 555 |
| | 6 | E | | 600 | 230 | | 600 | 360 | | 600 | 690 |
| MSSC2.25 | 3 | Min. | 475 | 495 | 165 | 475 | 765 | 225 | 475 | 785 | 345 |
| | 2 | A | 330 | 330 | 65 | | 510 | 100 | | 610 | 195 |
| | 2 | B | | 330 | 100 | | 510 | 155 | | 810 | 310 |
| | 3 | C | 475 | 495 | 165 | | 765 | 225 | | 1,040 | 345 |
| | 4 | D | | 660 | 180 | | 810 | 275 | | 810 | 555 |
| | 6 | E | | 990 | 230 | | 1,040 | 360 | | 1,040 | 690 |
| LSSC4.25 | 2 | Min. | 330 | 250 | 215 | 435 | 250 | 440 | 435 | 250 | 675 |
| | 5 | Max. | 435 | 610 | 215 | | 610 | 440 | | 610 | 725 |
| | 4 | Outer | | 420 | 200 | | 420 | 310 | | 420 | 520 |
| | 4 | F | | 250 | 300 | | 250 | 460 | | 250 | 670 |
| | 8 | G | | 500 | 495 | | 500 | 670 | | 500 | 670 |
| | 11 | H | | 610 | 545 | | 610 | 670 | | 610 | 670 |
| | 14 | I | | 610 | 670 | | 610 | 670 | | 610 | 670 |
| SSC4.25 | 2 | Min. | 330 | 330 | 355 | 510 | 350 | 525 | 660 | 350 | 890 |
| | 5 | Max. | 660 | 825 | 365 | 660 | 845 | 600 | | 845 | 1,005 |
| | 4 | Outer | | 580 | 235 | | 580 | 330 | | 580 | 625 |
| | 4 | F | | 350 | 300 | | 350 | 460 | | 350 | 920 |
| | 8 | G | | 695 | 495 | | 695 | 765 | | 695 | 980 |
| | 11 | H | | 845 | 545 | | 845 | 845 | | 845 | 980 |
| | 14 | I | | 845 | 675 | | 845 | 980 | | 845 | 980 |

See footnotes on p. 83.

## Table 3: SSC Steel Stud Connectors (MSSC4.25, LSSC6.25, SSC6.25 and MSSC6.25) — Allowable Loads (lb.)

| Model No. | No. of #10 Screws | Screw Pattern | Stud Thickness and Yield Strength | | | | | | | | |
|---|---|---|---|---|---|---|---|---|---|---|---|
| | | | 33 mil (20 ga.) – 33 ksi | | | 43 mil (18 ga.) – 33 ksi | | | 54 mil (16 ga.) – 50 ksi | | |
| | | | $F_2$ | $F_3$ | $F_4$ | $F_2$ | $F_3$ | $F_4$ | $F_2$ | $F_3$ | $F_4$ |
| MSSC4.25 | 2 | Min. | 330 | 330 | 355 | 510 | 510 | 525 | 1,020 | 605 | 890 |
| | 5 | Max. | 825 | 825 | 365 | 1,275 | 1,275 | 600 | 1,340 | 1,465 | 1,005 |
| | 4 | Outer | 660 | 660 | 235 | 1,020 | 1,010 | 330 | | 1,010 | 625 |
| | 4 | F | | 605 | 300 | | 605 | 460 | | 605 | 920 |
| | 8 | G | 1,320 | 1,210 | 495 | 1,340 | 1,210 | 765 | | 1,210 | 1,525 |
| | 11 | H | 1,340 | 1,465 | 545 | | 1,465 | 845 | | 1,465 | 1,615 |
| | 14 | I | | 1,465 | 675 | | 1,465 | 1,045 | | 1,465 | 1,615 |
| LSSC6.25 | 4 | Min. | 640 | 500 | 265 | 640 | 500 | 660 | 640 | 500 | 1,190 |
| | 7 | Max. | | 880 | 265 | | 880 | 660 | | 880 | 1,190 |
| | 6 | Outer | | 630 | 270 | | 630 | 375 | | 630 | 695 |
| | 4 | J | | 250 | 405 | | 250 | 625 | | 250 | 1,015 |
| | 8 | K | | 500 | 730 | | 500 | 1,015 | | 500 | |
| | 12 | L | | 750 | 975 | | 750 | | | 750 | |
| | 16 | M | | 895 | 1,015 | | 895 | | | 895 | |
| | 19 | N | | | | | | | | | |
| | 22 | O | | | | | | | | | |
| SSC6.25 | 4 | Min. | 975 | 660 | 385 | 975 | 695 | 720 | 975 | 695 | 1,190 |
| | 7 | Max. | | 975 | 1,155 | 385 | 1,220 | 720 | | 1,220 | 1,190 |
| | 6 | Outer | | 975 | 870 | 270 | 870 | 460 | | 870 | 725 |
| | 4 | J | | 660 | 350 | 405 | 350 | 625 | | 350 | 1,255 |
| | 8 | K | | 695 | 730 | | 695 | 1,130 | | 695 | 1,485 |
| | 12 | L | | 1,045 | 975 | | 1,045 | 1,485 | | 1,045 | 1,485 |
| | 16 | M | | 1,245 | 1,140 | | 1,245 | 1,485 | | 1,245 | 1,485 |
| | 19 | N | | 1,245 | 1,210 | | 1,245 | 1,485 | | 1,245 | 1,485 |
| | 22 | O | | 1,245 | 1,350 | | 1,245 | 1,485 | | 1,245 | 1,485 |
| MSSC6.25 | 4 | Min. | 1,970 | 660 | 385 | 1,970 | 1,020 | 720 | 1,970 | 1,210 | 1,190 |
| | 7 | Max. | | 1,155 | 1,155 | 385 | 1,785 | 1,785 | 720 | 2,115 | 1,365 |
| | 6 | Outer | | 990 | 990 | 270 | 1,530 | 1,515 | 460 | 1,515 | 725 |
| | 4 | J | | 660 | 605 | 405 | 1,020 | 605 | 625 | 605 | 1,255 |
| | 8 | K | | 1,320 | 1,210 | 730 | | 1,210 | 1,130 | 1,210 | 2,265 |
| | 12 | L | | | 1,810 | 975 | | 1,810 | 1,510 | 1,810 | 2,590 |
| | 16 | M | | 2,160 | 1,140 | | 2,160 | 1,765 | | 2,160 | |
| | 19 | N | | | 1,210 | | | 1,870 | | | |
| | 22 | O | | | 1,350 | | | 2,085 | | | |

See footnotes on p. 83.

C-CF-2020 ©2020 SIMPSON STRONG-TIE COMPANY INC.

# **SJC** Steel-Joist Connectors

SIMPSON Strong-Tie®



VALUE ENGINEERED

***This product is preferable to similar connectors because of a) easier installation, b) higher loads, c) lower installed cost, or a combination of these features.***

SJC connectors have been specifically designed for various CFS joist, rafter and underside of metal-deck applications. The unique clip dimensions enable easy installation on the open side of joists and rafters with up to 3½" flanges and return lips up to ¾". For metal-deck applications, the prepunched ⅜" holes easily accommodate 6", 8", 10" and 12" on-center metal-deck flutes.

**Features:**

- Prepunched holes reduce installation cost by eliminating predrilling
- Intuitive fastener hole positions ensure accurate clip installation in accordance with design, support a wide range of design and application requirements and provide installation flexibility
- Angle lengths accommodate either hard-side or soft-side attachment for joists with return lips up to ¾"
- 4½" leg length enables soft-side connections for joists with flanges up to 3½"
- Also accommodates kicker-to-metal-deck applications

**Material:** SJC — 68 mil (50 ksi); MSJC — 97 mil (50 ksi)

**Finish:** Galvanized (G90)

**Installation:**

- Use all specified fasteners/anchors

**Codes:** See p. 11 for Code Reference Key Chart

**For detailed product dimensions, refer to p. 89.**

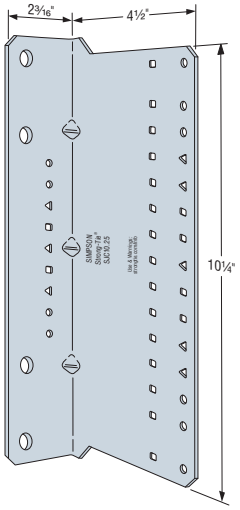


**SJC10.25**
*(MSJC10.25 similar)*

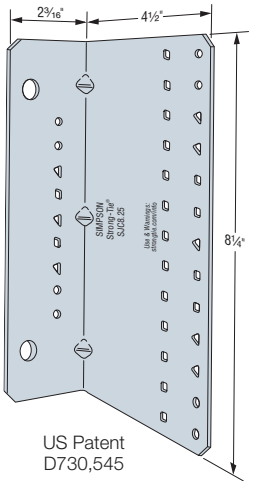


**SJC8.25**
*(MSJC8.25 similar)*

US Patent D730,545

## Ordering Information

| Model No. | Ordering SKU | Package Quantity |
|---|---|---|
| SJC8.25 | SJC8.25-R15 | Box of 15 |
| MSJC8.25 | MSJC8.25-R15 | |
| SJC10.25 | SJC10.25-R15 | Box of 15 |
| MSJC10.25 | MSJC10.25-R15 | |

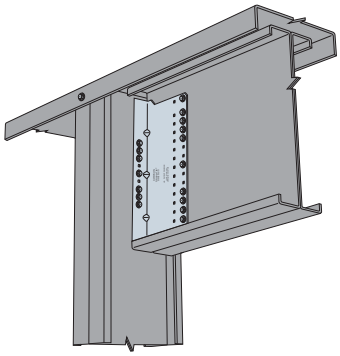

Header to Jamb

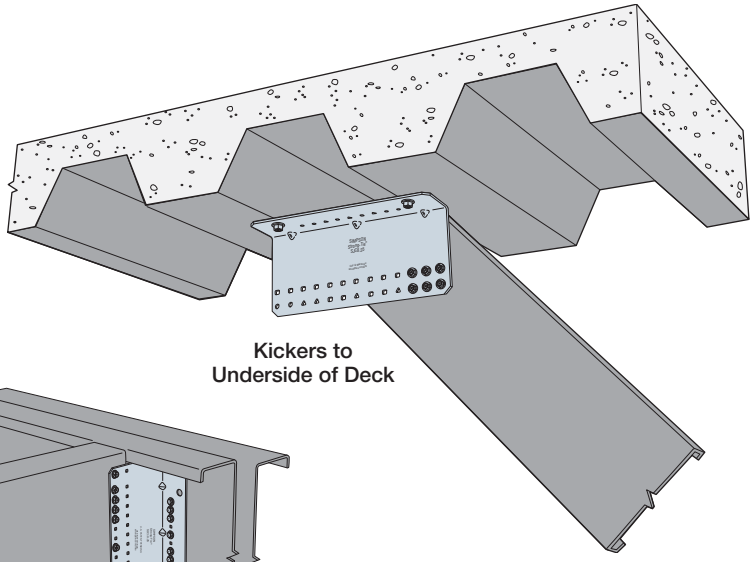

Kickers to Underside of Deck

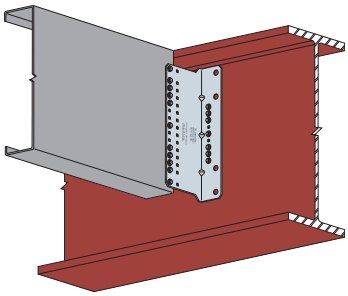

Joists to I-Beam

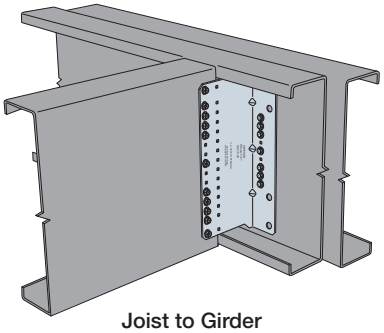

Joist to Girder

**Note: For 6" and 8" joists: SSC connectors are recommended.**

C-CF-2020 ©2020 SIMPSON STRONG-TIE COMPANY INC.

# **SJC** Steel-Joist Connectors

SIMPSON Strong-Tie®



## SJC Connectors — Steel-to-Steel Allowable Loads

| Model No. | Connector Material Thickness mil (ga.) | Clip Length (in.) | Framing Member Depth[4] (in.) | Fasteners[5] | | | Allowable $F_4$ Load (lb.)[2] | | | Code Ref. |
|---|---|---|---|---|---|---|---|---|---|---|
| | | | | Pattern[1] | Carried Member | Carrying Member | Minimum Member Thickness | | Maximum Connector Load[3] | |
| | | | | | | | 54 mil (16 ga.) | 68 mil (14 ga.) | | |
| SJC8.25 | 68 (14) | 8¼ | 10 | Min. | (4) #10 | (4) #10 | 980 | 980 | 2,930 | IBC |
| | | | | Max. | (9) #10 | (7) #10 | 1,005 | 1,490 | | |
| | | | | Inner | (5) #10 | (4) #10 | 1,345 | 2,005 | | |
| MSJC8.25 | 97 (12) | 8¼ | 10 | Min. | (4) #10 | (4) #10 | 1,005 | 1,710 | 2,930 | |
| | | | | Max. | (9) #10 | (7) #10 | 1,135 | 1,765 | | |
| | | | | Inner | (5) #10 | (4) #10 | 1,535 | 2,220 | | |
| SJC10.25 | 68 (14) | 10¼ | 12 | Min. | (6) #10 | (4) #10 | 1,170 | 1,625 | 3,935 | |
| | | | | Max. | (11) #10 | (7) #10 | 1,265 | 1,625 | | |
| | | | | Inner | (7) #10 | (5) #10 | 1,620 | 2,170 | | |
| MSJC10.25 | 97 (12) | 10¼ | 12 | Min. | (6) #10 | (4) #10 | 1,200 | 2,045 | 3,935 | |
| | | | | Max. | (11) #10 | (7) #10 | 1,265 | 2,045 | | |
| | | | | Inner | (7) #10 | (5) #10 | 1,730 | 2,635 | | |

1. Min. fastener quantity and load values — fill all round holes; Max. fastener quantity and load values — fill all round and triangular holes; Inner fastener quantity and load values — see illustrations for fastener placement.
2. Allowable loads are based on bracing of the members located within 12" of the connection.
3. Maximum allowable load for connector that may not be exceeded when designing custom installations. Designer is responsible for member and fastener design.
4. For 6" and 8" joists, SSC connectors are recommended.
5. See *Fastening Systems* catalog (C-F-2019) on **strongtie.com** for more information on Simpson Strong-Tie fasteners.

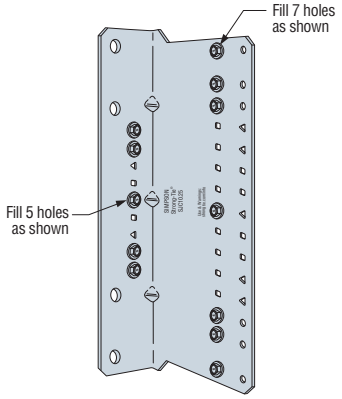


**SJC10.25 — Inner Fastener Pattern**
*(MSJC10.25 similar)*

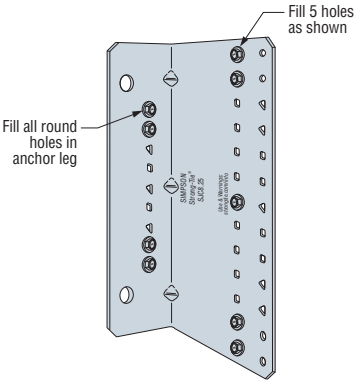


**SJC8.25 — Inner Fastener Pattern**
*(MSJC8.25 similar)*

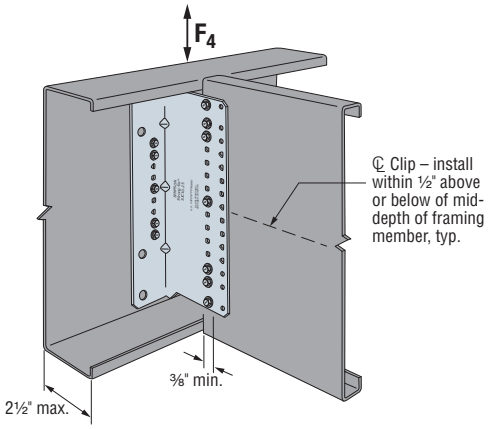


**SJC Installation with Carried Member Fasteners in Inner Row**

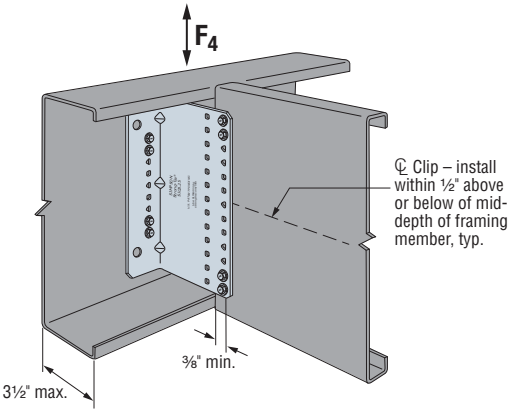


**SJC Installation with Carried Member Fasteners in Min. Pattern**
*(fill circle holes min. quantity, circle and triangle holes max. quantity)*

C-CF-2020 ©2020 SIMPSON STRONG-TIE COMPANY INC.

# **SJC** Steel-Joist Connectors



## SJC Connectors — Kicker Allowable Loads

| Model No. | Connector Material Thickness mil (ga.) | Clip Length (in.) | Fasteners to Kicker | Kicker Angle[2] | Maximum Kicker Load for 33 mil (20 ga.) Min. Kicker (lb.) | Anchor Tension at Maximum Load (lb.) | Code Ref. |
|---|---|---|---|---|---|---|---|
| SJC8.25 | 68 (14) | 8¼ | (6) #10 | 30° | 490 | 345 | IBC, FL |
| | | | | 45° | 535 | 570 | |
| SJC10.25 | 68 (14) | 10¼ | (6) #10 | 30° | 625 | 475 | |
| | | | | 45° | 530 | 440 | |
| MSJC10.25 | 97 (12) | 10¼ | (6) #10 | 30° | 950 | 675 | |
| | | | | 45° | 780 | 680 | |

1. Loads apply to connectors installed perpendicular or parallel to metal-deck flutes, with minimum 33 mil (20 ga.) kicker.
2. Kicker angle is the acute angle measured relative to the horizontal plane of the metal deck.
3. The tabulated value for anchor tension is per anchor. Anchors must be designed for combined shear and tension. Simpson Strong-Tie anchorage solutions are tabulated on p. 88. Alternate anchors may be utilized if designed by others.
4. See *Fastening Systems* catalog (C-F-2019) on **strongtie.com** for more information on Simpson Strong-Tie fasteners.

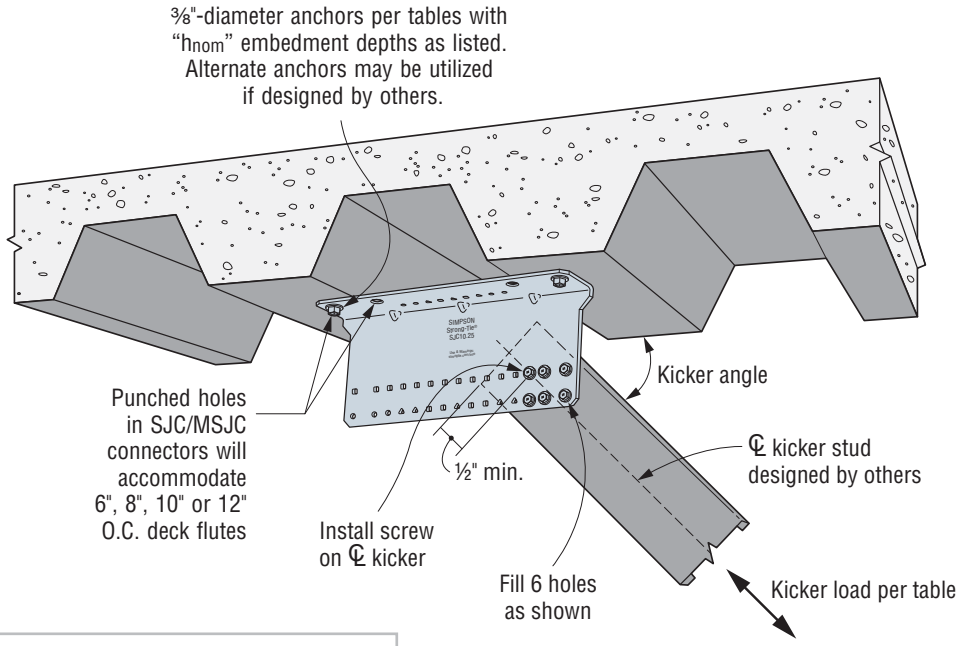


**Typical SJC Installation**
*(MSJC similar)*

Titen HD®
Screw Anchor

Strong-Bolt® 2
Wedge Anchor

For more information, see *Anchoring, Fastening and Restoration Systems for Concrete and Masonry* catalog (C-A-2018).

C-CF-2020 ©2020 SIMPSON STRONG-TIE COMPANY INC.

# **SJC** Steel-Joist Connectors



## SJC and MSJC Kicker Anchorage Solutions

| Uncracked Concrete, Wind and Seismic in SDC A&B | | | | |
|---|---|---|---|---|
| Minimum 2.5" Slab (3,000 psi concrete min.) Over Metal Deck | | | | |
| Model No. | Kicker Angle | ⅜"-Diameter Simpson Strong-Tie® Anchor Type | Nominal Embedment Depth, $h_{nom}$ (in.) | Allowable Maximum Kicker Load (lb.) |
| SJC8.25 | 30° | Strong-Bolt® 2 | 2½ | 490 |
| | | Titen HD® | 2¼ | 490 |
| | 45° | Strong-Bolt 2 | 2½ | 535 |
| | | Titen HD | 2½ | 535 |
| SJC10.25 | 30° | Strong-Bolt 2 | 2½ | 625 |
| | | Titen HD | 2¼ | 625 |
| | 45° | Strong-Bolt 2 | 2½ | 530 |
| | | Titen HD | 2¼ | 530 |

| Cracked Concrete, Wind and Seismic in SDC A&B | | | | |
|---|---|---|---|---|
| Minimum 2.5" Slab (3,000 psi concrete min.) Over Metal Deck | | | | |
| Model No. | Kicker Angle | ⅜"-Diameter Simpson Strong-Tie Anchor Type | Nominal Embedment Depth, $h_{nom}$ (in.) | Allowable Maximum Kicker Load (lb.) |
| SJC8.25 | 30° | Strong-Bolt 2 | 2¾ | 490 |
| | | Titen HD | 2½ | 455 |
| | 45° | Strong-Bolt 2 | 2¾ | 535 |
| | | Titen HD | 2½ | 320 |
| SJC10.25 | 30° | Strong-Bolt 2 | 2¾ | 625 |
| | | Titen HD | 2½ | 435 |
| | 45° | Strong-Bolt 2 | 2¾ | 530 |
| | | Titen HD | 2½ | 410 |

| Cracked Concrete, Seismic in SDC C through F | | | | | |
|---|---|---|---|---|---|
| Minimum 2.5" Slab (3,000 psi concrete min.) Over Metal Deck | | | | | |
| Model No. | Kicker Angle | ⅜"-Diameter Simpson Strong-Tie Anchor Type | Nominal Embedment Depth, $h_{nom}$ (in.) | Allowable Maximum Kicker Load (lb.) | |
| | | | | $\Omega = 1.5$ | $\Omega = 2.5$ |
| SJC8.25 | 30° | STB2 | 3⅜ | 490 | 435 |
| | | Titen HD | 2½ | 255 | 155 |
| | 45° | STB2 | 3⅜ | 535 | 330 |
| | | Titen HD | 2½ | 185 | 110 |
| SJC10.25 | 30° | STB2 | 3⅜ | 625 | 420 |
| | | Titen HD | 2½ | 245 | 145 |
| | 45° | STB2 | 3⅜ | 530 | 410 |
| | | Titen HD | 2½ | 235 | 140 |

1. **The allowable maximum kicker load is the minimum of anchor allowable loads or connector allowable loads per p. 87. The anchor allowable loads include checks for anchor shear and tension interaction including the effects of eccentric loading.**
2. Allowable loads have been determined using ACI 318-14 Chapter 17 anchorage calculations with the minimum concrete compressive strength, $f'_c$ and slab thickness listed.
3. Strong-Bolt 2 and Titen HD are ⅜"-diameter carbon steel anchor.
4. Concrete over metal deck may be Normal Weight or Sand-Lightweight with $f'_c$ of 3,000 psi minimum and 2.5" minimum slab height above upper flute.
5. Minimum deck flute height is 1½" (distance from top flute to bottom flute). All other anchor installation requirements shall follow ICC-ES ESR-3037 and ICC-ES ESR-2713.
6. Minimum Spacing and Edge distances for bottom of metal deck assemblies shall comply with those required in ICC-ES ESR-3037 for Strong-Bolt 2 anchors and ICC-ES ESR-2713 for Titen HD anchors.
7. Load values are based on ACI 318-14, condition B, load factors from ACI 318-14 Section 5.3, no supplemental edge reinforcement for uncracked concrete, $\Psi_{c,V} = 1.0$ for cracked concrete, and periodic special inspection. Reference ICC-ES ESR-3037 and ICC-ES ESR-2713 for further information.
8. Allowable Stress Design (ASD) values have been determined by multiplying Load Resistance Factor Design (LRFD) values by a conversion factor, Alpha ($\alpha$), of 0.7 for loads and 0.6 for wind loads. ASD values for other types or load combinations may be determined using alternate conversion factors.
9. Minimum end distance to edge of panel is two times anchor embedment depth.

C-CF-2020 ©2020 SIMPSON STRONG-TIE COMPANY INC.

# **SJC** Steel-Joist Connectors



## SJC Utility Clip Dimensions

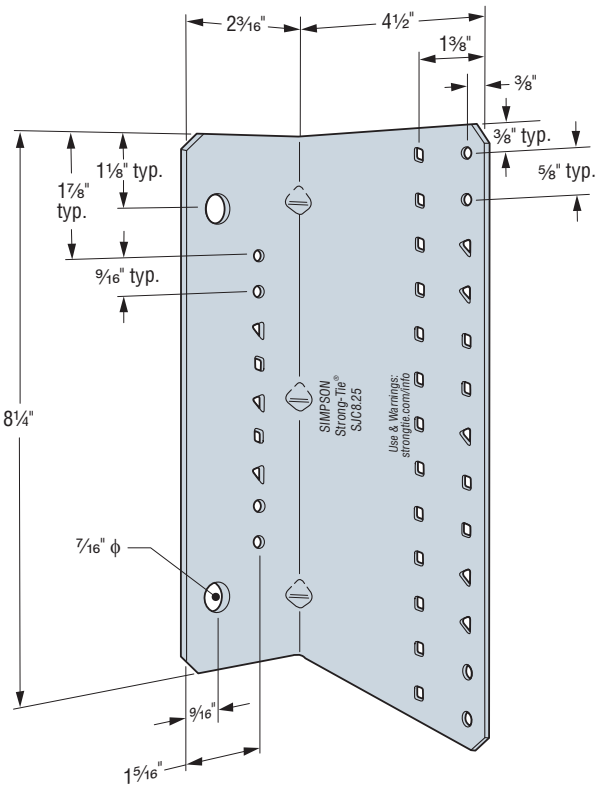


**SJC8.25**
*(MSJC8.25 similar)*

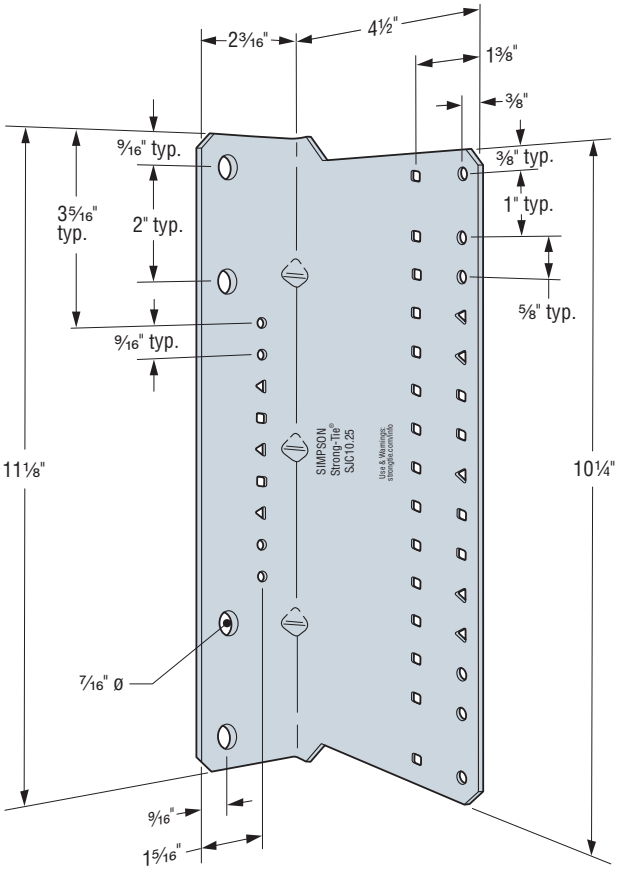


**SJC10.25**
*(MSJC10.25 similar)*

C-CF-2020 ©2020 SIMPSON STRONG-TIE COMPANY INC.

# **SJC** Steel-Joist Connectors



## SJC and SSC Connectors — Soffit Stud Hanger Allowable Loads

| Model No. | Connector Thickness mil (ga.) | Clip Length (in.) | Anchors | Fasteners to Stud 33 mil (20 ga.) Min. | Allowable Tension Load (lb.) | |
|---|---|---|---|---|---|---|
| | | | | | No Bearing Plate | BP½-3 Bearing Plate |
| SJC8.25 | 68 (14) | 8¼ | (2) ⅜" | (4) #10 | 465 | 930 |
| SJC10.25 | 68 (14) | 10¼ | (2) ⅜" | (4) #10 | 465 | 930 |
| SSC4.25 | 68 (14) | 4¼ | (1) ⅜" | (4) #10 | 220 | 585 |

1. Loads apply to connectors installed perpendicular or parallel to metal-deck flutes.
2. Stud member design per designer. Tabulated loads for stud fasteners are based on a minimum stud thickness of 33 mil (20 ga.) with a yield stress of 33 ksi. For 30 mil interior studs with a yield strength of 33 ksi, multiply the tabulated values by 0.9.
3. Anchor design per designer. Note that the SJC requires the symmetrical placement of one anchor on each side of the stud centerline.
4. For the bearing plate option, use Simpson Strong-Tie® BP½-3 bearing plates at each ⅜"-diameter anchor. Bearing plates are sold separately.

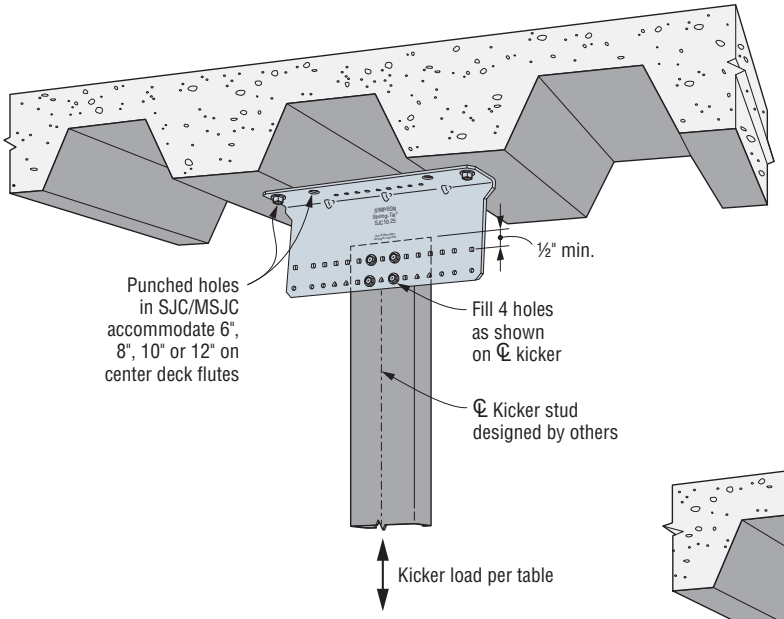


**Typical SJC Soffit Installation**
*(MSJC similar)*

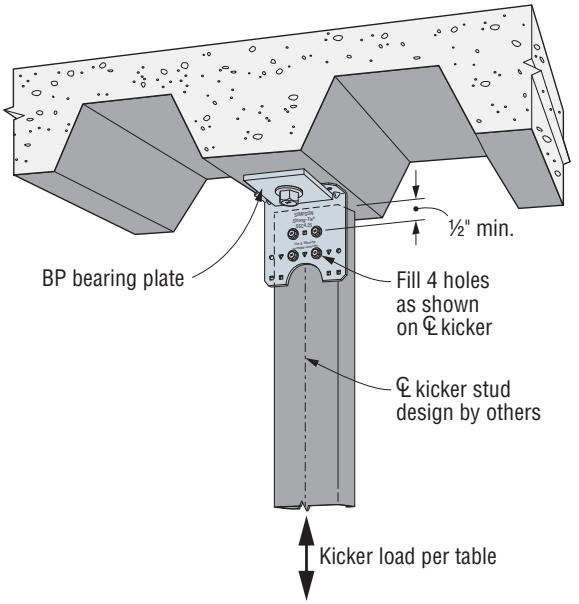


**Typical SSC Soffit Installation**

C-CF-2020 ©2020 SIMPSON STRONG-TIE COMPANY INC.

# **SFC** Steel Framing Connectors

SIMPSON Strong-Tie®



VALUE ENGINEERED

***This product is preferable to similar connectors because of a) easier installation, b) higher loads, c) lower installed cost, or a combination of these features.***

SFC connectors are a low-cost, multi-use utility clips for light to moderate loading conditions in CFS stud-to-stud and stud-to-structure applications where long leg lengths are not required.

**Features:**

- Reduced number of screws reduces installation cost
- Prepunched holes reduce installation cost by eliminating predrilling
- Intuitive fastener hole positions ensure accurate clip installation in accordance with design, support a wide range of design and application requirements and provide installation flexibility
- In soft-side stud installations, SFC will not interfere with stud lips up to ¾" long*
- Also suitable for u-channel bridging

**Material:** SFC — 54 mil (50 ksi)

**Finish:** Galvanized (G90)

**Installation:**

- Use all specified fasteners/anchors

**Codes:** See p. 11 for Code Reference Key Chart

**For detailed product dimensions, refer to p. 92.**

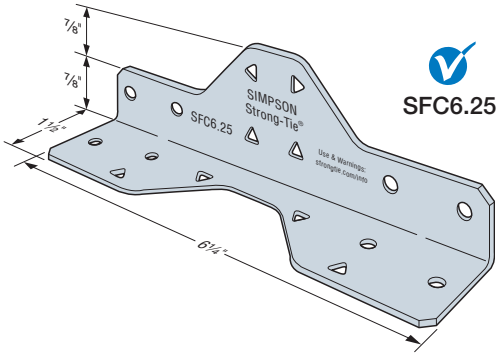


SFC6.25

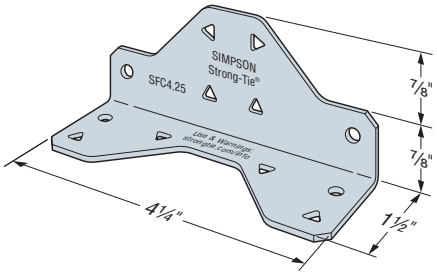


SFC4.25

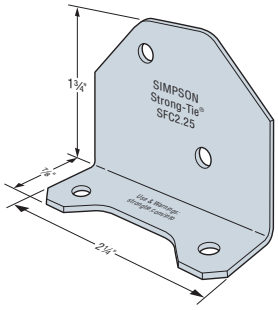


SFC2.25

US Patent 9,016,024

## Ordering Information

| Model No. | Ordering SKU | Package Quantity |
|---|---|---|
| SFC2.25 | SFC2.25-R300 | Bucket of 300 |
| SFC4.25 | SFC4.25-R175 | Bucket of 175 |
| SFC6.25 | SFC6.25-R100 | Bucket of 100 |

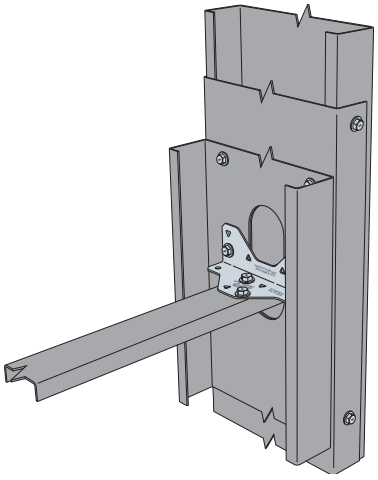

**U-Channel to Jamb**

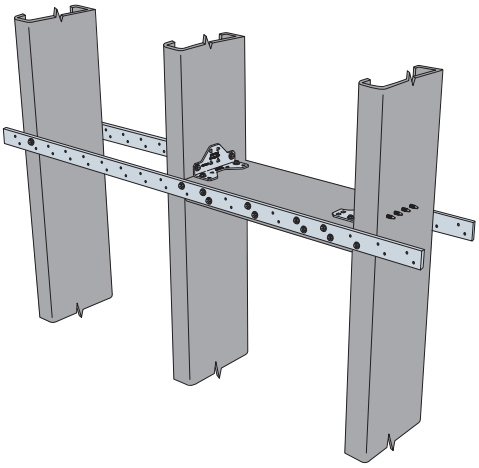

**Stud Blocking with CS Coiled Strap**

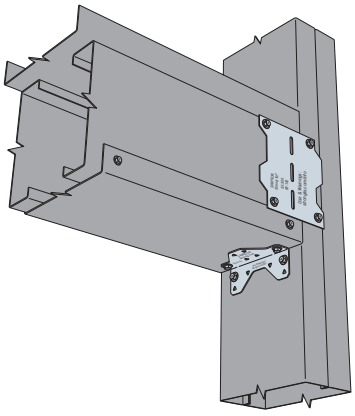

**Box Headers to Jambs**
*(also shown S/LS angles)*

*SFC2.25 clips will accommodate ⅝" long stiffener clips.

C-CF-2020 ©2020 SIMPSON STRONG-TIE COMPANY INC.

# **SFC** Steel Framing Connectors



## SFC Connectors — Steel-to-Steel Allowable Loads

| Model No. | Connector Material Thickness mil (ga.) | L (in.) | Framing Member Depth (in.) | Fasteners | | | Allowable $F_4$ Load (lb.) | | | | Code Ref. |
|---|---|---|---|---|---|---|---|---|---|---|---|
| | | | | Pattern[1] | Carried Member | Carrying Member | Minimum Member Thickness | | | Maximum Connector Load[3] | |
| | | | | | | | 33 mil (20 ga.) | 43 mil (18 ga.) | 54 mil (16 ga.) | | |
| SFC2.25 | 54 (16) | 2¼ | 3⅝ | Min. | (2) #10 | (2) #10 | 295 | 355 | 630 | 630 | IBC |
| SFC4.25 | 54 (16) | 4¼ | 6 | Min. | (2) #10 | (2) #10 | 355 | 525 | 745 | 1,750 | |
| | | | | Max. | (6) #10 | (6) #10 | 575 | 985 | 1,750 | | |
| SFC6.25 | 54 (16) | 6¼ | 8 | Min. | (4) #10 | (4) #10 | 590 | 1,035 | 1,840 | 2,640 | |
| | | | | Max. | (8) #10 | (8) #10 | 590 | 1,055 | 1,880 | | |

1. Min. fastener quantity and load values — fill all round holes;
   Max. fastener quantity and load values — fill all round and triangular holes.
2. Allowable loads are based on bracing of the members located within 12" of the connection.
3. Maximum allowable load for connector that may not be exceeded when designing custom installations. Designer is responsible for member and fastener design.
4. See *Fastening Systems* catalog (C-F-2019) on **strongtie.com** for more information on Simpson Strong-Tie fasteners.

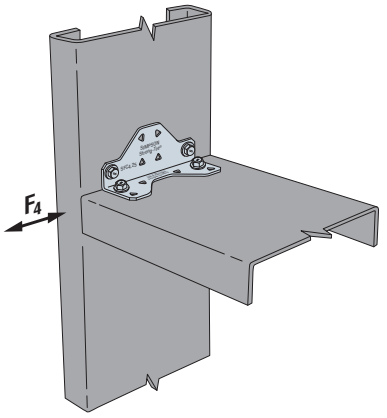


**Typical SFC Installation**

## SFC Utility Clip Dimensions

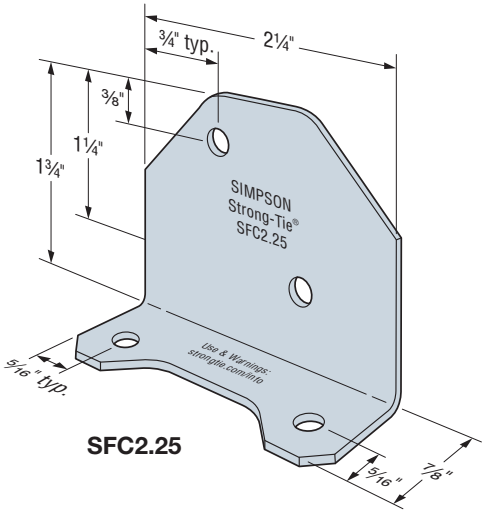


**SFC2.25**

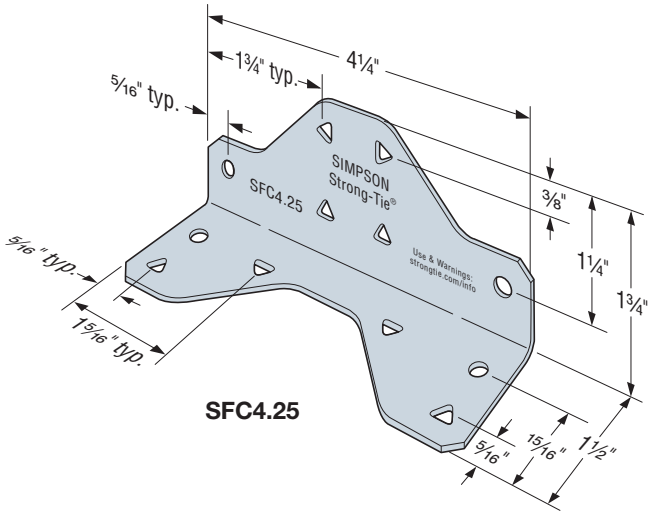


**SFC4.25**

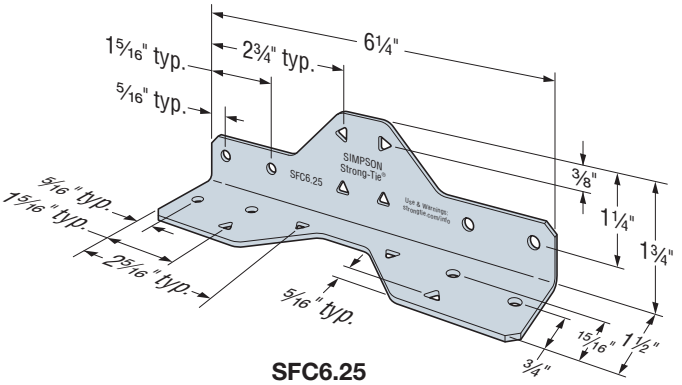


**SFC6.25**

C-CF-2020 ©2020 SIMPSON STRONG-TIE COMPANY INC.

# **RCA** Rigid Connector Angles

The Simpson Strong-Tie® rigid connector angle is a general-purpose clip angle designed for a wide range of cold-formed steel construction applications. With prepunched holes for fastener attachment, these L-shaped clips save time and labor on the job.

**Features:**

- Use with miscellaneous header/sill connections to jamb studs, jamb stud reinforcement at track, u-channel bridging, stud-blocking, bypass curtain-wall framing and more
- Easy to install, with prepunched holes for quick and accurate fastener attachment

**Material:** RCA223/54, RCA225/54, RCA227/54, RCA333/54, RCA335/54 — 54 mil (16 ga.), 50 ksi;

RCA223/68, RCA225/68, RCA227/68, RCA333/68, RCA335/68 — 68 mil (14 ga.), 50 ksi;

RCA223/97, RCA225/97, RCA227/97, RCA333/97, RCA335/97 — 97 mil (12 ga.), 50 ksi

**Finish:** Galvanized (G90)

**Installation:**

- Use all specified anchors/fasteners

**RCA229 and RCA 2211 (9" and 11") available 1st Quarter 2020**

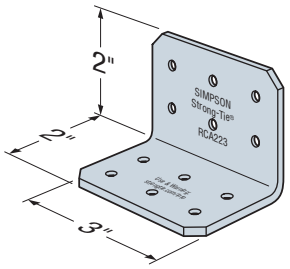


RCA223

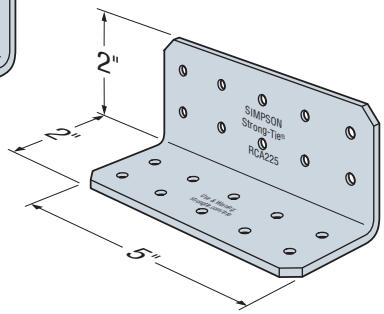


RCA225

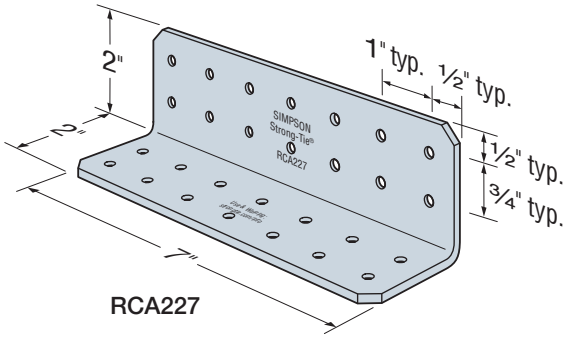


RCA227

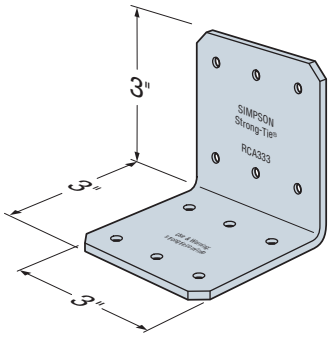


RCA333

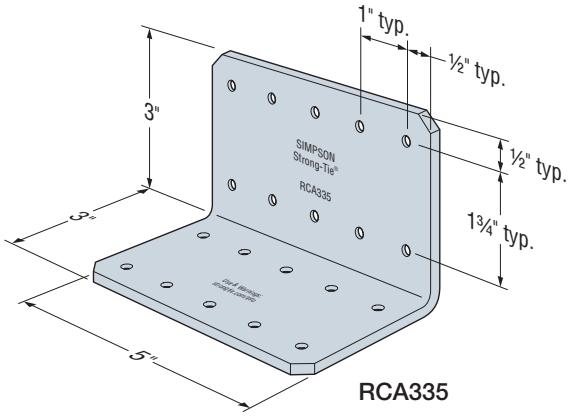


RCA335

## Ordering Information

| Model No. | Ordering SKU | Bucket Quantity |
|---|---|---|
| RCA223/54 | RCA223/54-R150 | 150 |
| RCA223/68 | RCA223/68-R125 | 125 |
| RCA223/97 | RCA223/97-R90 | 90 |
| RCA225/54 | RCA225/54-R90 | 90 |
| RCA225/68 | RCA225/68-R75 | 75 |
| RCA225/97 | RCA225/97-R55 | 55 |
| RCA227/54 | RCA227/54-R65 | 65 |
| RCA227/68 | RCA227/68-R55 | 55 |
| RCA227/97 | RCA227/97-R40 | 40 |
| RCA333/54 | RCA333/54-R100 | 100 |
| RCA333/68 | RCA333/68-R85 | 85 |
| RCA333/97 | RCA333/97-R60 | 60 |
| RCA335/54 | RCA335/54-R60 | 60 |
| RCA335/68 | RCA335/68-R50 | 50 |
| RCA335/97 | RCA335/97-R35 | 35 |



C-CF-2020 ©2020 SIMPSON STRONG-TIE COMPANY INC.

# **RCA** Rigid Connector Angles



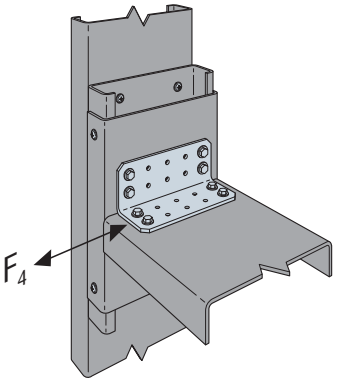


Typical RCA225 Installation at Sill/Jamb

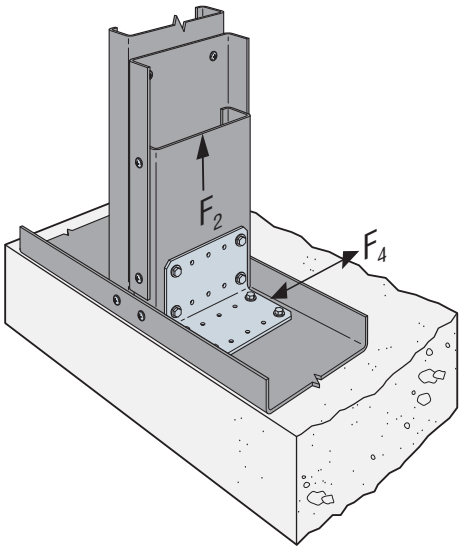


Typical RCA335 Installation at Base of Jamb

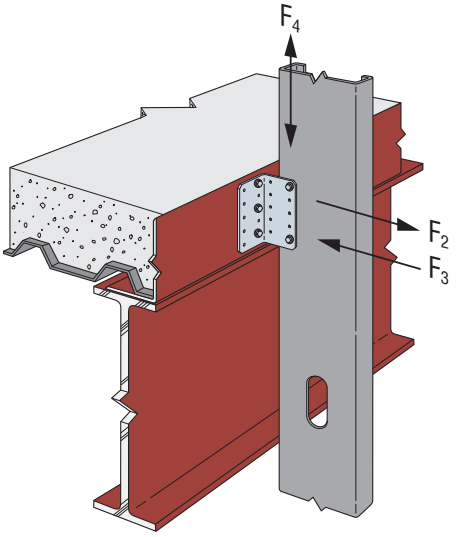


Typical RCA335 Installation at Bypass Framing

## Screw Patterns for Rigid Connector Angles

| Models | Pattern 1 | Pattern 2 | Pattern 3 | | |
|---|---|---|---|---|---|
| RCA223/54<br>RCA223/68<br>RCA223/97<br>RCA333/54<br>RCA333/68<br>RCA333/97 | 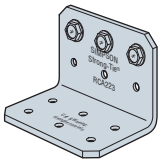 | 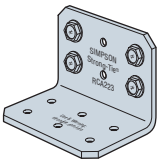 | 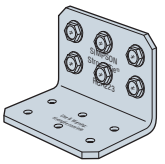 | | |
| **Models** | **Pattern 4** | **Pattern 5** | **Pattern 6** | **Pattern 7** | **Pattern 8** |
| RCA225/54<br>RCA225/68<br>RCA225/97<br>RCA335/54<br>RCA335/68<br>RCA335/97 | 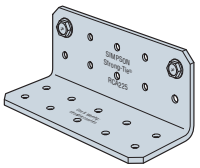 | 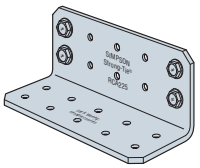 | 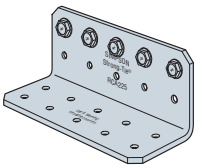 | 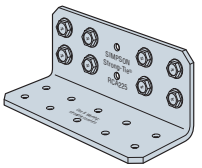 | 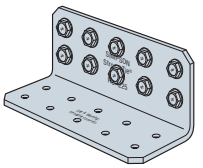 |
| **Models** | **Pattern 9** | **Pattern 10** | **Pattern 11** | **Pattern 12** | **Pattern 13** |
| RCA227/54<br>RCA227/68<br>RCA227/97 | 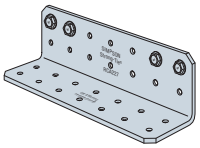 | 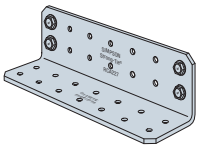 | 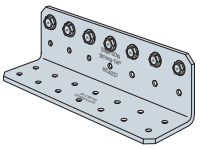 | 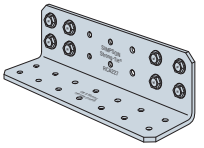 | 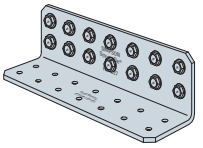 |

C-CF-2020 ©2020 SIMPSON STRONG-TIE COMPANY INC.

# **RCA** Rigid Connector Angles

SIMPSON Strong-Tie®



## RCA Rigid Connector Angles Allowable Loads (lb.)

| Model | No. of #10 Screws[5,6] | Screw Pattern | Stud Framing Thickness[11] | | | | | | | | |
|---|---|---|---|---|---|---|---|---|---|---|---|
| | | | 33 mil (20 ga.) | | | 43 mil (18 ga.) | | | 54 mil (16 ga.) | | |
| | | | $F_2$ | $F_3$ | $F_4$ | $F_2$ | $F_3$ | $F_4$ | $F_2$ | $F_3$ | $F_4$ |
| RCA223/54 | 3 | 1 | 205 | 495 | 200 | 205 | 590 | 310 | 205 | 590 | 620 |
| | 4 | 2 | 205 | 580 | 390 | 205 | 580 | 605 | 205 | 580 | 1,095 |
| | 6 | 3 | 205 | 865 | 480 | 205 | 865 | 740 | 205 | 865 | 1,095 |
| RCA223/68 | 3 | 1 | 310 | 495 | 200 | 310 | 765 | 310 | 310 | 815 | 620 |
| | 4 | 2 | 310 | 660 | 390 | 310 | 805 | 605 | 310 | 805 | 1,210 |
| | 6 | 3 | 310 | 990 | 480 | 310 | 1,205 | 740 | 310 | 1,205 | 1,350 |
| RCA223/97 | 3 | 1 | 495 | 495 | 200 | 630 | 765 | 310 | 630 | 1,415 | 620 |
| | 4 | 2 | 630 | 660 | 390 | 630 | 1,020 | 605 | 630 | 1,265 | 1210 |
| | 6 | 3 | 630 | 990 | 480 | 630 | 1,530 | 740 | 630 | 1,895 | 1,485 |
| RCA225/54 | 2 | 4 | 330 | 330 | 265 | 340 | 390 | 410 | 340 | 390 | 815 |
| | 4 | 5 | 340 | 580 | 535 | 340 | 580 | 830 | 340 | 580 | 1,660 |
| | 5 | 6 | 340 | 825 | 460 | 340 | 980 | 705 | 340 | 980 | 1,310 |
| | 8 | 7 | 340 | 1,155 | 915 | 340 | 1,155 | 1,420 | 340 | 1,155 | 1,825 |
| | 10 | 8 | 340 | 1,445 | 1,035 | 340 | 1,445 | 1,600 | 340 | 1,445 | 1,825 |
| RCA225/68 | 2 | 4 | 330 | 330 | 265 | 510 | 510 | 410 | 520 | 545 | 815 |
| | 4 | 5 | 520 | 660 | 535 | 520 | 805 | 830 | 520 | 805 | 1,660 |
| | 5 | 6 | 520 | 825 | 460 | 520 | 1,275 | 705 | 520 | 1,360 | 1,415 |
| | 8 | 7 | 520 | 1,320 | 915 | 520 | 1,605 | 1,420 | 520 | 1,605 | 2,255 |
| | 10 | 8 | 520 | 1,650 | 1,035 | 520 | 2,010 | 1,600 | 520 | 2,010 | 2,255 |
| RCA225/97 | 2 | 4 | 330 | 330 | 265 | 510 | 510 | 410 | 1,020 | 945 | 815 |
| | 4 | 5 | 660 | 660 | 535 | 1,020 | 1,020 | 830 | 1,050 | 1,265 | 1,660 |
| | 5 | 6 | 825 | 825 | 460 | 1,050 | 1,275 | 705 | 1,050 | 2,360 | 1,415 |
| | 8 | 7 | 1,050 | 1,320 | 915 | 1,050 | 2,040 | 1,420 | 1,050 | 2,525 | 2,835 |
| | 10 | 8 | 1,050 | 1,650 | 1,035 | 1,050 | 2,550 | 1,600 | 1,050 | 3,155 | 3,200 |
| RCA227/54 | 4 | 9 | 475 | 660 | 545 | 475 | 785 | 840 | 475 | 785 | 1,675 |
| | 4 | 10 | 475 | 580 | 595 | 475 | 580 | 920 | 475 | 580 | 1,840 |
| | 7 | 11 | 475 | 1,155 | 765 | 475 | 1,280 | 1,185 | 475 | 1,280 | 1,685 |
| | 8 | 12 | 475 | 1,155 | 1,120 | 475 | 1,155 | 1,730 | 475 | 1,155 | 2,555 |
| | 14 | 13 | 475 | 2,025 | 1,685 | 475 | 2,025 | 2,555 | 475 | 2,025 | 2,555 |
| RCA227/68 | 4 | 9 | 660 | 660 | 545 | 725 | 1,020 | 840 | 725 | 1,090 | 1,675 |
| | 4 | 10 | 660 | 660 | 595 | 725 | 805 | 920 | 725 | 805 | 1,840 |
| | 7 | 11 | 725 | 1,155 | 765 | 725 | 1,780 | 1,185 | 725 | 1,780 | 2,370 |
| | 8 | 12 | 725 | 1,320 | 1,120 | 725 | 1,605 | 1,730 | 725 | 1,605 | 3,155 |
| | 14 | 13 | 725 | 2,310 | 1,685 | 725 | 2,810 | 2,605 | 725 | 2,810 | 3,155 |
| RCA227/97 | 4 | 9 | 660 | 660 | 545 | 1,020 | 1,020 | 840 | 1,470 | 1,890 | 1,675 |
| | 4 | 10 | 660 | 660 | 595 | 1,020 | 1,020 | 920 | 1,470 | 1,265 | 1,840 |
| | 7 | 11 | 1,155 | 1,155 | 765 | 1,470 | 1,785 | 1,185 | 1,470 | 3,080 | 2,370 |
| | 8 | 12 | 1,320 | 1,320 | 1,120 | 1,470 | 2,040 | 1,730 | 1,470 | 2,525 | 3,460 |
| | 14 | 13 | 1,470 | 2,310 | 1,685 | 1,470 | 3,570 | 2,605 | 1,470 | 4,420 | 4,490 |

See footnotes on p. 96.

C-CF-2020 ©2020 SIMPSON STRONG-TIE COMPANY INC.

# **RCA** Rigid Connector Angles



## RCA Rigid Connector Angles Allowable Loads (lb.)

| Model | No. of #10 Screws[5,6] | Screw Pattern | Stud Framing Thickness[11] | | | | | | | | |
|---|---|---|---|---|---|---|---|---|---|---|---|
| | | | 33 mil (20 ga.) | | | 43 mil (18 ga.) | | | 54 mil (16 ga.) | | |
| | | | $F_2$ | $F_3$ | $F_4$ | $F_2$ | $F_3$ | $F_4$ | $F_2$ | $F_3$ | $F_4$ |
| RCA333/54 | 3 | 1 | 205 | 440 | 130 | 205 | 440 | 195 | 205 | 440 | 395 |
| | 4 | 2 | 205 | 580 | 325 | 205 | 580 | 505 | 205 | 580 | 1,005 |
| | 6 | 3 | 205 | 865 | 430 | 205 | 865 | 665 | 205 | 865 | 1,095 |
| RCA333/68 | 3 | 1 | 310 | 495 | 130 | 310 | 615 | 195 | 310 | 615 | 395 |
| | 4 | 2 | 310 | 660 | 325 | 310 | 805 | 505 | 310 | 805 | 1,005 |
| | 6 | 3 | 310 | 990 | 430 | 310 | 1,205 | 665 | 310 | 1,205 | 1,335 |
| RCA333/97 | 3 | 1 | 495 | 495 | 130 | 630 | 765 | 195 | 630 | 1,065 | 395 |
| | 4 | 2 | 630 | 660 | 325 | 630 | 1,020 | 505 | 630 | 1,265 | 1,005 |
| | 6 | 3 | 630 | 990 | 430 | 630 | 1,530 | 665 | 630 | 1,895 | 1,335 |
| RCA335/54 | 2 | 4 | 330 | 295 | 205 | 340 | 295 | 320 | 340 | 295 | 635 |
| | 4 | 5 | 340 | 580 | 450 | 340 | 580 | 695 | 340 | 580 | 1,390 |
| | 5 | 6 | 340 | 735 | 305 | 340 | 735 | 475 | 340 | 735 | 835 |
| | 8 | 7 | 340 | 1,155 | 755 | 340 | 1,155 | 1,170 | 340 | 1,155 | 1,825 |
| | 10 | 8 | 340 | 1,445 | 860 | 340 | 1,445 | 1,330 | 340 | 1,445 | 1,825 |
| RCA335/68 | 2 | 4 | 330 | 330 | 205 | 510 | 410 | 320 | 520 | 410 | 635 |
| | 4 | 5 | 520 | 660 | 450 | 520 | 805 | 695 | 520 | 805 | 1,390 |
| | 5 | 6 | 520 | 825 | 305 | 520 | 1,025 | 475 | 520 | 1,025 | 945 |
| | 8 | 7 | 520 | 1,320 | 755 | 520 | 1,605 | 1,170 | 520 | 1,605 | 2,255 |
| | 10 | 8 | 520 | 1,650 | 860 | 520 | 2,010 | 1,330 | 520 | 2,010 | 2,255 |
| RCA335/97 | 2 | 4 | 330 | 330 | 205 | 510 | 510 | 320 | 1,020 | 710 | 635 |
| | 4 | 5 | 660 | 660 | 450 | 1,020 | 1,020 | 695 | 1,050 | 1,265 | 1,390 |
| | 5 | 6 | 825 | 825 | 305 | 1,050 | 1,275 | 475 | 1,050 | 1,775 | 945 |
| | 8 | 7 | 1,050 | 1,320 | 755 | 1,050 | 2,040 | 1,170 | 1,050 | 2,525 | 2,335 |
| | 10 | 8 | 1,050 | 1,650 | 860 | 1,050 | 2,550 | 1,330 | 1,050 | 3,155 | 2,660 |

1. As applicable, the tabulated values are calculated based on AISI RP15-2, AISI S100 or generally accepted industry standards.
2. The tabulated values do not account for anchorage to the support. Anchor strength must be calculated separately and may reduce the capacity of the connection when compared to the tabulated values.
3. Tabulated values do not include shear, web crippling, buckling or other local effects in the member. The designer must check member limit states separately.
4. For load combinations that include $F_4$ and/or $F_2$ and/or $F_3$, use an appropriate interaction equation.
5. #10–16 screws shall have $P_{ss} \geq 1{,}620$ lb. Calculated values are per AISI S100. Screws must be installed with three (minimum) exposed threads.
6. The number of screws is for one clip leg that is attached to the supported stud.
7. In addition to calculations of net and gross section tension, $F_2$ values are also calculated and normally controlled by weak-axis bending of the anchored clip leg with the line of bending at the holes nearest the bend radius of the angle. The designer is responsible for calculating pullover, pullout and tension strength of the anchors and this may reduce $F_2$ strength compared to the tabulated values.
8. $F_3$ strength values are computed using the plate buckling provisions of AISI RP15-2.
9. For the $F_4$ strength values it's assumed that all of the connection eccentricity is taken by the screws in the supported stud. $F_4$ values are also limited by plate shear buckling per AISI RP15-2. The designer is responsible for calculating the shear capacity of the anchorage, which may reduce $F_4$ strength compared to the tabulated values.
10. In addition to the limit states given in notes 7, 8 and 9, $F_2$, $F_3$ and $F_4$ are also limited by screw shear according to the thinnest connected part of the connector and stud.
11. For 50 ksi studs, 68 mil (14 ga.) and thicker, use the tabulated values for 54 mil (16 ga.) — 50 ksi studs.

C-CF-2020 ©2020 SIMPSON STRONG-TIE COMPANY INC.

# **L, LS and S/LS** Utility Clips and Skewable Angles



L, LS and S/LS angles are load rated and provide the correct thickness and number of fasteners the specifier is looking for compared with field fabricated clip angles. These angles also have well-defined fastener locations, and testing ensures that the tabulated load values account for connection eccentricities. The connectors are general utility reinforcing angles with multiple uses. LS and S/LS connectors are skewable and can be used to attach members intersecting at angles.

**Material:** L — 54 mil (16 ga.); LS — 43 mil (18 ga.); S/LS — 43 mil (18 ga.)

**Finish:** Galvanized (G90)

**Installation:**

- Use all specified fasteners
- S/LS — field-skewable; bend one time only
- CFS framing must be constrained against rotation when using a single S/LS per connection

**Codes:** See p. 11 for Code Reference Key Chart

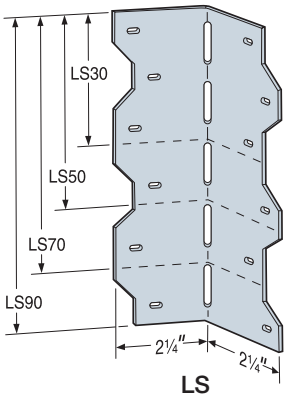


LS

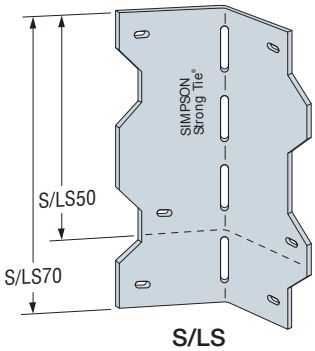


S/LS

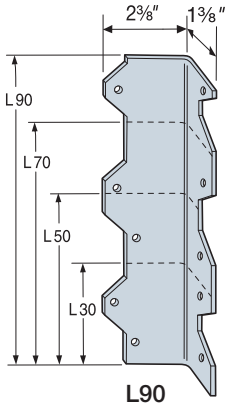


L90

| Model No. | Length (in.) | Fasteners | Allowable Load (lb.) | | | | | | Code Ref. |
|---|---|---|---|---|---|---|---|---|---|
| | | | 33 mil (20 ga.) | | 43 mil (18 ga.) | | 54 mil (16 ga.) | | |
| | | | $F_1$ | $F_2$ | $F_1$ | $F_2$ | $F_1$ | $F_2$ | |
| L30 | 3 | (4) #10 | 200 | 60 | 315 | 85 | 610 | — | IBC, FL, LA |
| L50 | 5 | (6) #10 | 475 | — | 675 | 90 | 750 | 110 | |
| L70 | 7 | (8) #10 | 705 | — | 760 | 110 | 1,100 | 110 | |
| L90 | 9 | (10) #10 | 795 | — | 945 | 110 | 1,740 | 110 | |
| LS30 | 3⅜ | (6) #10 | 200 | — | 370 | — | 500 | — | |
| S/LS50 | 4⅞ | (4) #10 | 200 | — | 370 | — | 500 | — | |
| S/LS70 | 6⅜ | (6) #10 | 465 | — | 575 | — | 715 | — | |
| LS90 | 7⅞ | (12) #10 | 465 | — | 895 | — | 915 | — | |

1. Loads are for one part only.
2. See *Fastening Systems* catalog (C-F-2019) on **strongtie.com** for more information on Simpson Strong-Tie fasteners.

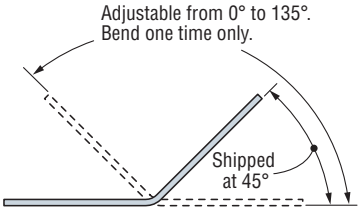


LS and S/LS Top View

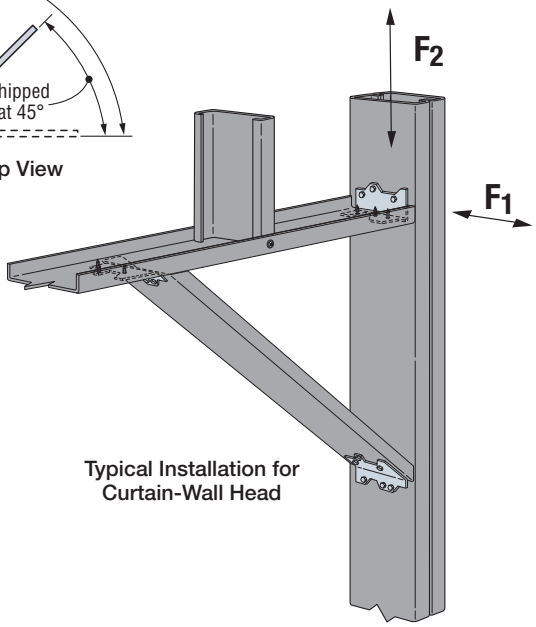


Typical Installation for Curtain-Wall Head

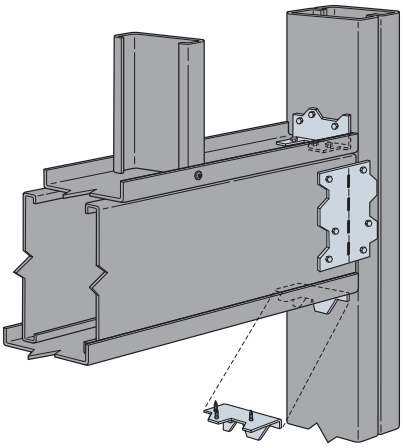

Typical Installation for Gravity Headers

C-CF-2020 ©2020 SIMPSON STRONG-TIE COMPANY INC.

# **SHH** Header Hanger



***This product is preferable to similar connectors because of a) easier installation, b) higher loads, c) lower installed cost, or a combination of these features.***

The SHH steel header hanger is used to support traditional CFS box headers that are fabricated with top and bottom tracks, as well as large-flange lay-in headers that are common in curtain-wall construction. The connector geometry minimizes drywall buildup, and the screw count has been minimized through extensive testing. A wide array of value-engineered hole patterns are available that will accommodate different load levels while minimizing installed cost.

**Features:**

- The bottom tabs transfer wind load from the horizontal window header to the jamb studs and help support the header assembly during installation.
- Tabulated loads are based on component assembly testing, which assists to mitigate design risk.
- The SHH6 is manufactured in steel thicknesses of 54 mil (16 ga.) and 68 mil (14 ga.) that are intended for use with 6"-deep (min.) box headers, and the SHH3 is manufactured from 68 mil (14 ga.) steel and is intended for 3⅝" or 4"-deep (max.) box headers and large-flange lay-in headers.
- To enable easier drywall installation, the gusset portion of the SHH is coped to avoid 1½" (max.) track legs.
- The screw-hole layout at the jamb studs accommodates flange sizes of 1⅝", 2", 2½", 3" and 3½". This versatility allows the load to be evenly distributed along two lines of fasteners so that each jamb stud carries equal axial load with minimum eccentricity.

**Material:** SHH3/68 – 68 mil (14 ga.), 40 ksi;
SHH6/54 — 54 mil (16 ga.), 40 ksi;
SHH6/68 — 68 mil (14 ga.), 40 ksi

**Finish:** Galvanized (G90)

**Installation:**

- Use all specified anchors/fasteners.
- At each connection to a jamb stud, use one SHH connector on each side of the header. A ⅛" (max.) gap is allowed between the end of the header and the face of the jamb stud. Use all specified fasteners.

**Codes:** See p. 11 for Code Reference Key Chart.

**Ordering Information:** SHH3/68-KT24, SHH6/54-KT24 and SHH6/68-KT24 are each packaged as boxes of 12 right-handed connectors and 12 left-handed connectors.

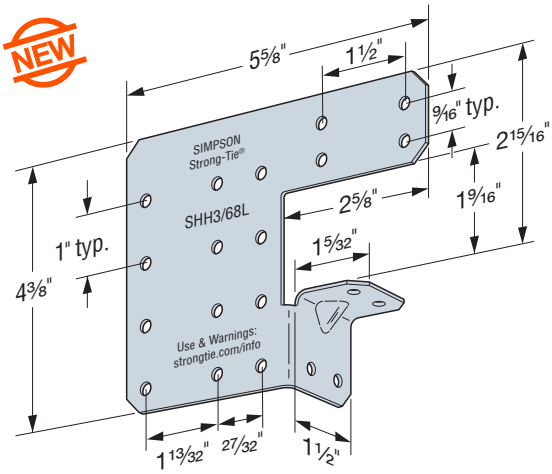


**SHH3/68**
Patent Pending

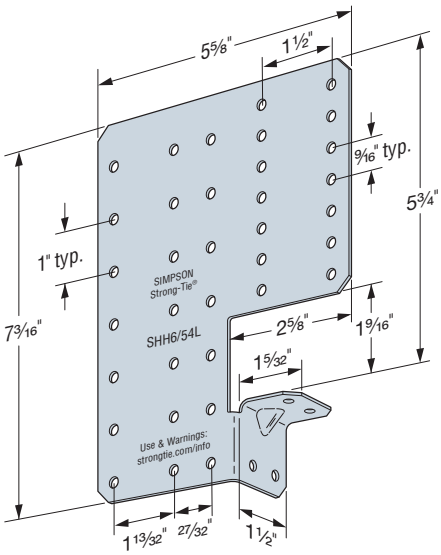


**SHH6/54, SHH6/68**
Patent Pending

C-CF-2020 ©2020 SIMPSON STRONG-TIE COMPANY INC.

# **SHH** Header Hanger





## SHH Allowable Steel Header Hanger Connector Loads Total for Both Clips (lb.)

| Model No. | Screw Pattern | #10 Screws to Jamb (Total per Connection) | #10 Screws to Header (Total per Connection) | Load Direction | Jamb Stud Thickness mil (ga.) | Header Stud / Track Thickness mil (ga.) | | | | | Code Ref. |
|---|---|---|---|---|---|---|---|---|---|---|---|
| | | | | | | 33 (20) | 43 (18) | 54 (16) | 68 (14) | 97 (12) | |
| SHH3/68 | A1 or A2 (with box header) | Flanges (8) Web (4) | Web (8) Track (4) | $F_1$ | 33 (20) | 565 | 565 | 565 | | | — |
| | | | | | 43 (18) | | 1,020 | 1,020 | | | |
| | | | | | 54 (16) | | | 1,845 | | | |
| | | | | $F_4$ | 33 (20) | 1,300 | 1,300 | 1,300 | | | |
| | | | | | 43 (18) | | 1,740 | 1,740 | | | |
| | | | | | 54 (16) | | | 3,140 | | | |
| SHH3/68 | B1 or B2 (with large-flange header) | Flanges (8) Web (4) | Flanges (8) Web (4) | $F_1$ | 33 (20) | 335 | 335 | 335 | | | |
| | | | | | 43 (18) | | 635 | 635 | | | |
| | | | | | 54 (16) | | | 1,150 | | | |
| | | | | $F_4$ | 33 (20) | 1,285 | 1,285 | 1,285 | | | |
| | | | | | 43 (18) | | 1,775 | 1,775 | | | |
| | | | | | 54 (16) | | | 2,275 | | | |
| SHH6/54 | C1 or C2 | Flanges (8) Web (4) | Web (8) Track (4) | $F_1$ | 33 (20) | 400 | 400 | 400 | | | |
| | | | | | 43 (18) | | 770 | 770 | | | |
| | | | | | 54 (16) | | | | | | |
| | | | | | 68 (14) | | | | | | |
| | | | | $F_4$ | 33 (20) | 1,705 | 1,705 | 1,705 | | | |
| | | | | | 43 (18) | | 2,310 | 2,310 | | | |
| | | | | | 54 (16) | | | 3,525 | | | |
| | | | | | 68 (14) | | | 3,525 | 4,180 | 4,180 | |
| SHH6/54 | D1 or D2 | Flanges (12) Web (4) | Web (12) Track (4) | $F_1$ | 33 (20) | 400 | 400 | 400 | | | |
| | | | | | 43 (18) | | 775 | 775 | | | |
| | | | | | 54 (16) | | | 1,495 | | | |
| | | | | $F_4$ | 33 (20) | 1,705 | 1,705 | 1,705 | | | |
| | | | | | 43 (18) | | 2,365 | 2,365 | | | |
| | | | | | 54 (16) | | | 5,335 | | | |
| SHH6/54 | E1 or E2 | Flanges (16) Web (4) | Web (16) Track (4) | $F_1$ | 33 (20) | 400 | 400 | 400 | | | |
| | | | | | 43 (18) | | 775 | 775 | | | |
| | | | | | 54 (16) | | | 1,495 | | | |
| | | | | $F_4$ | 33 (20) | 1,705 | 1,705 | 1,705 | | | |
| | | | | | 43 (18) | | 2,365 | 2,365 | | | |
| | | | | | 54 (16) | | | 5,335 | | | |

See footnotes on p. 100.

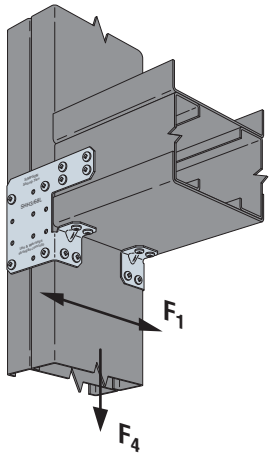


SHH3/68 with Box Header

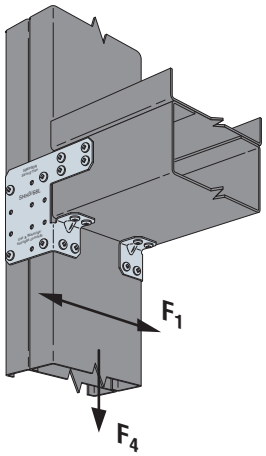


SHH3/68 with Large-Flange Header

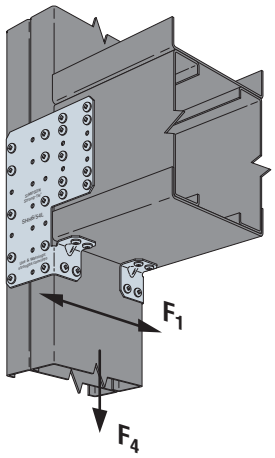


SHH6/54, SHH6/68

C-CF-2020 ©2020 SIMPSON STRONG-TIE COMPANY INC.

# **SHH** Header Hanger



## SHH Allowable Steel Header Hanger Connector Loads for Both Clips (lb.) (cont.)

| Model No. | Screw Pattern | #10 Screws to Jamb (Total per Connection) | #10 Screws to Header (Total per Connection) | Load Direction | Jamb Stud Thickness mil (ga.) | Header Stud / Track Thickness mil (ga.) | | | | | Code Ref. |
|---|---|---|---|---|---|---|---|---|---|---|---|
| | | | | | | 33 (20) | 43 (18) | 54 (16) | 68 (14) | 97 (12) | |
| SHH6/54 | F1 or F2 | Flanges (20) Web (4) | Web (20) Track (4) | $F_1$ | 33 (20) | 400 | 400 | | 400 | | — |
| | | | | | 43 (18) | | 775 | | 775 | | |
| | | | | | 54 (16) | | 775 | 1,565 | 1,565 | | |
| | | | | | 68 (14) | | | | 2,565 | | |
| | | | | $F_4$ | 33 (20) | 1,705 | 1,705 | | 1,705 | | |
| | | | | | 43 (18) | | 2,365 | | 2,365 | | |
| | | | | | 54 (16) | | 2,365 | 5,650 | 5,650 | | |
| | | | | | 68 (14) | | | | 7,220 | | |
| SHH6/54 | G1 or G2 | Flanges (28) Web (4) | Web (28) Track (4) | $F_1$ | 33 (20) | 400 | 400 | | 400 | | |
| | | | | | 43 (18) | | 775 | | 775 | | |
| | | | | | 54 (16) | | 775 | 1,565 | 1,565 | | |
| | | | | | 68 (14) | | | | 2,565 | | |
| | | | | | 97 (12) | | | | | | |
| | | | | $F_4$ | 33 (20) | 1,705 | 1,705 | | 1,705 | | |
| | | | | | 43 (18) | | 2,365 | | 2,365 | | |
| | | | | | 54 (16) | | 2,365 | 5,650 | 5,650 | | |
| | | | | | 68 (14) | | | | 7,700 | | |
| | | | | | 97 (12) | | | | 7,700 | 9,710 | |
| SHH6/68 | E1 or E2 | Flanges (16) Web (4) | Web (16) Track (4) | $F_1$ | 33 (20) | 400 | 400 | | 400 | | |
| | | | | | 43 (18) | | 870 | | 870 | | |
| | | | | | 54 (16) | | 870 | 1,610 | 1,610 | | |
| | | | | | 68 (14) | | | | 2,565 | | |
| | | | | $F_4$ | 33 (20) | 1,705 | 1,705 | | 1,705 | | |
| | | | | | 43 (18) | | 2,365 | | 2,365 | | |
| | | | | | 54 (16) | | 2,365 | 5,665 | 5,665 | | |
| | | | | | 68 (14) | | | | 6,180 | | |
| SHH6/68 | F1 or F2 | Flanges (20) Web (4) | Web (20) Track (4) | $F_1$ | 33 (20) | 400 | 400 | | 400 | | |
| | | | | | 43 (18) | | 775 | | 775 | | |
| | | | | | 54 (16) | | 775 | 1,565 | 1,565 | | |
| | | | | | 68 (14) | | | | 2,565 | | |
| | | | | $F_4$ | 33 (20) | 1,705 | 1,705 | | 1,705 | | |
| | | | | | 43 (18) | | 2,365 | | 2,365 | | |
| | | | | | 54 (16) | | 2,365 | 5,665 | 5,655 | | |
| | | | | | 68 (14) | | | | 7,415 | | |
| SHH6/68 | G1 or G2 | Flanges (28) Web (4) | Web (28) Track (4) | $F_1$ | 33 (20) | 400 | 400 | | 400 | | |
| | | | | | 43 (18) | | 870 | | 870 | | |
| | | | | | 54 (16) | | 870 | 1,610 | 1,610 | | |
| | | | | | 68 (14) | | | | 2,565 | | |
| | | | | | 97 (12) | | | | 2,565 | | |
| | | | | $F_4$ | 33 (20) | 1,705 | 1,705 | | 1,705 | | |
| | | | | | 43 (18) | | 2,365 | | 2,365 | | |
| | | | | | 54 (16) | | 2,365 | 5,665 | 5,655 | | |
| | | | | | 68 (14) | | | | 7,700 | | |
| | | | | | 97 (12) | | | | 7,700 | 10,410 | |

1. Screws must be located in screw hole locations shown in SHH screw patterns on p. 101 to achieve listed loads.
2. Connectors must be installed in pairs. Fasteners listed are number of fasteners for both clips in the connection at one end of header.
3. Allowable load is total load at one end of header assembly with both clips (left hand and right hand).

C-CF-2020 ©2020 SIMPSON STRONG-TIE COMPANY INC.

# **SHH** Header Hanger



## SHH Screw Patterns (Total Number of Screws Both Clips)

| SHH3/68 No. of Screws | Pattern A1 | Pattern A2 |
|---|---|---|
| Header Web (8) | 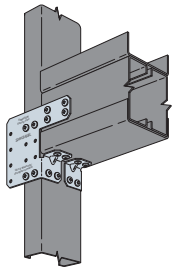 | 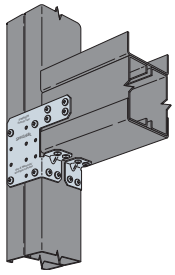 |
| Header Track (4) | | |
| Jamb Flanges (8) | | |
| Jamb Web (4) | | |

| SHH3/68 No. of Screws | Pattern B1 | Pattern B2 |
|---|---|---|
| Header Flange (8) | 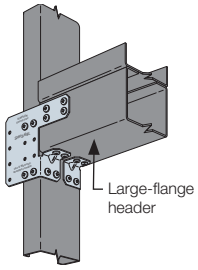  | 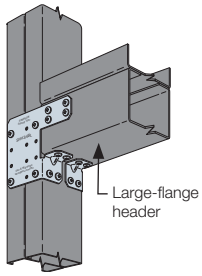  |
| Header Web (4) | | |
| Jamb Flanges (8) | | |
| Jamb Web (4) | | |

| SHH6/54 No. of Screws | Pattern C1 | Pattern C2 |
|---|---|---|
| Header Web (8) | 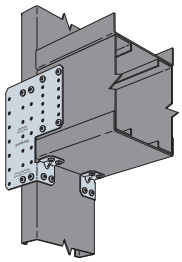 | 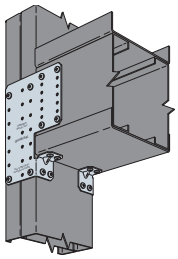 |
| Header Track (4) | | |
| Jamb Flanges (8) | | |
| Jamb Web (4) | | |

| SHH6/54 No. of Screws | Pattern D1 | Pattern D2 |
|---|---|---|
| Header Web (12) | 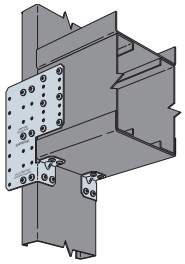 | 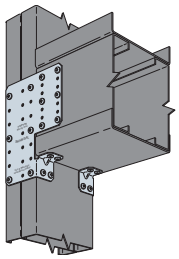 |
| Header Track (4) | | |
| Jamb Flanges (12) | | |
| Jamb Web (4) | | |

| SHH6/54 or 68 No. of Screws | Pattern E1 | Pattern E2 |
|---|---|---|
| Header Web (16) | 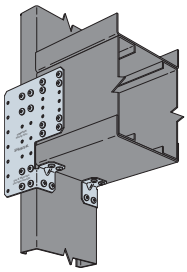 | 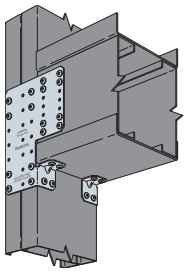 |
| Header Track (4) | | |
| Jamb Flanges (16) | | |
| Jamb Web (4) | | |

| SHH6/54 or 68 No. of Screws | Pattern F1 | Pattern F2 |
|---|---|---|
| Header Web (20) | 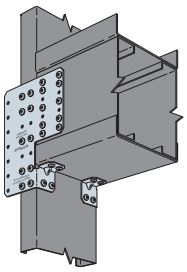 | 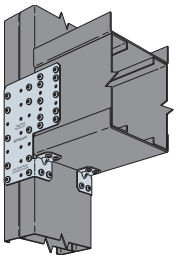 |
| Header Track (4) | | |
| Jamb Flanges (20) | | |
| Jamb Web (4) | | |

| SHH6/54 or 68 No. of Screws | Pattern G1 | Pattern G2 |
|---|---|---|
| Header Web (28) | 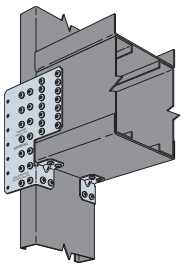 | 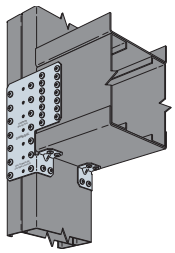 |
| Header Track (4) | | |
| Jamb Flanges (28) | | |
| Jamb Web (4) | | |

C-CF-2020 ©2020 SIMPSON STRONG-TIE COMPANY INC.

# **RCKW** Kneewall Connectors

SIMPSON Strong-Tie®



***This product is preferable to similar connectors because of a) easier installation, b) higher loads, c) lower installed cost, or a combination of these features.***

The Simpson Strong-Tie® RCKW is a heavy 171 mil (7 ga.) rigid connector that has been developed to resist an overturning moment at the base of exterior kneewalls and parapets as well as interior partial-height walls or overhead ribbon window conditions. These connectors offer a unique small and large anchor-hole pattern that permits anchorage to both concrete and structural steel. The single-anchor RCKW has been redesigned to have all of the same features as the previous model but with an added two-anchor option that accommodates ½"- or ⅜"-diameter concrete anchors. If load requires more capacity, a stiffener, the RCKWS can be added. The RCKWS is a heavy 171 mil (7 ga.) stiffener that nests onto the RCKW clip. The screw holes and anchor holes in the stiffener line up with those in the RCKW clip, making fastener and anchor installation a snap. The RCKW clip and RCKWS stiffener are sold separately.

**Features:**

- Anchorage legs incorporate stiffened flanges, improving overturning moment resistance.
- Large-diameter anchor holes accommodate ½"-diameter concrete screw anchor and wedge anchors, such as the Simpson Strong-Tie Titen HD® heavy-duty screw anchor and the Strong-Bolt® 2 wedge anchor.
- The RCKW5.5 and RCKW7.5 have three large holes for added versatility. The center large hole is for a one-anchor solution at the edge or center of slab. The outer larger holes are for a two-anchor solution that requires higher capacities at the center of slab. In addition, two ⅜" Titen HD screw anchors have been tested in the outer larger holes for shallower embedment required conditions like fluted deck.
- Additional smaller-diameter anchor holes enable attachment to structural steel with #12 self-drilling screws.
- Attachment to CMU can be achieved with Titen HD or Titen® 2 concrete and masonry screws.
- For the RCKWS: 171 mil (7 ga.) stiffeners are secured to the RCKW clip with screws, optimizing overturning moment resistance and stiffness.

**Material:** RCKW and RCKWS — 171 mil (7 ga.), 33 ksi

**Coating:** Galvanized (G90)

**Installation:**

- Use all specified screw fasteners. To achieve tabulated load values, use #12–14 screws according to the fastener patterns on p. 105.
- When using the RCKWS, secure the stiffener to the clip with the specified screw fasteners. Screws must be at least 1" long and extend through the connection with a minimum of three exposed threads.
- Use all specified anchors. To achieve tabulated stiffness values, the installation torque for concrete anchors shall be at least 17 ft.-lb. or the torque requirements of the anchor, whichever is greater.
- When using the larger-diameter anchor holes, the bottom track must be predrilled or punched with a ¾"-diameter hole.

**Codes:** See p. 11 for Code Reference Key Chart

## Ordering Information

| Model No. | Ordering SKU | Package Quantity |
|---|---|---|
| RCKW3 | RCKW3-R10 | 10 RCKW3 clips |
| RCKW5.5 | RCKW5.5-R10 | 10 RCKW5.5 clips |
| RCKW7.5 | RCKW7.5-R10 | 10 RCKW7.5 clips |
| RCKW3S | RCKW3S-R10 | 10 RCKW3S stiffeners |
| RCKW5.5S | RCKW5.5S-R10 | 10 RCKW5.5S stiffeners |

**NEW DESIGN**
- Three large holes for added versatility
- Higher capacity option
- Shallowed embedment option

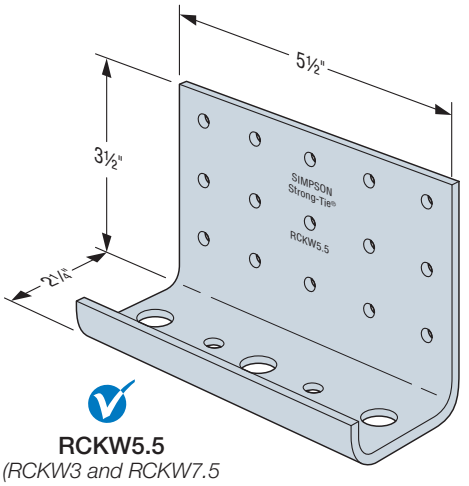


**RCKW5.5**
*(RCKW3 and RCKW7.5 models also available)*

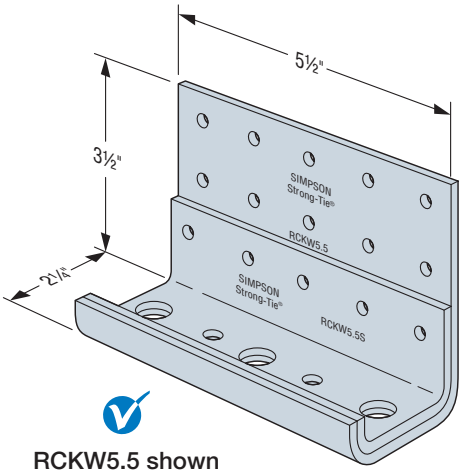


**RCKW5.5 shown with RCKW5.5S stiffener**
*(RCKW5.5S can also be used with the RCKW7.5; RCKW3S can be used with RCKW3)*
US Patent 9,938,709

C-CF-2020 ©2020 SIMPSON STRONG-TIE COMPANY INC.

**RCKW assembly test with member failure.**

# Ease of Specification

Many cold-formed steel connector manufacturers provide limited technical data for their products. As a result, designers often rely on detailed and time-consuming hand calculations for CFS connection design. This often involves assumptions regarding connection eccentricity, prying and connection stiffness.

Simpson Strong-Tie strives for ease of specification by providing comprehensive load tables based on tests that simulate real-world conditions. These load tables ensure that tabulated values reflect not only the strength of the connector, but also the strength of the fasteners, the anchorage, the member near the connection, and the overall stiffness. The photo to the right is an example of member failure near the connection. Such failures are reflected in our tabulated loads because of our assembly testing.

# Simplified Stiffness Calculations

Some manufacturers tabulate stiffness values only for the connector. It's often unknown or unclear if their stiffness includes the screw fastener slip and how this varies with the thickness of the stud. Additionally, with some manufacturers, the deflection of the stud must be added to the deflection from the rotation of the connector in order to arrive at the final deflection for design.

Because we have tested the entire assembly, Simpson Strong-Tie tabulates stiffness that includes connector deflection, fastener slip and stud deflection for walls up to 38" in height. Our stiffness also takes into account the thickness of the stud, making it simple for the designer to calculate deflections: Simply divide the required moment by the tabulated stiffness, and then multiply the result by the stud length (Ref. Example #1 on p. 107). For walls over 38", a different approach is required (Ref. Example #2 on pp. 108–109).

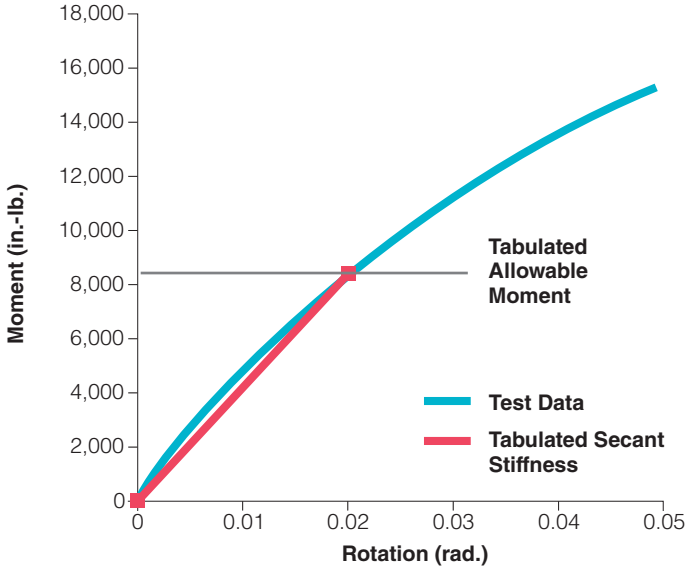


C-CF-2020 ©2020 SIMPSON STRONG-TIE COMPANY INC.

# **RCKW** Kneewall Connectors

SIMPSON Strong-Tie®



## Table 1: RCKW Allowable Loads — Concrete Applications

| Model No. | Fastener Pattern No. | Anchor Bolt Dia. (in.) | Fasteners to Stud | Framing Members Thickness mil (ga.) | Allowable Moment M (in.-lb.) | Assembly Rotational Stiffness[9,11] β (in.-kip / rad.) | Connector Rotational Stiffness[10,11] $\beta_c$ (in.-kip / rad.) | Anchor Tension, T, at Allowable Moment (lb.) | | Allowable Tension Load $F_2$ (lb.) | Anchor Tension, T, at Allowable Tension Load, $F_2$ (lb.) | | Allowable Shear Load $F_4$ (lb.) | Code Ref. |
|---|---|---|---|---|---|---|---|---|---|---|---|---|---|---|
| | | | | | | | | f'c = 3,000 psi | f'c = 4,000 psi | | f'c = 3,000 psi | f'c = 4,000 psi | | |
| RCKW3 | 1 | (1) ½" | (4) #12 | 33 (20) | 2,425 | 87 | 93 | 1,870 | 1,790 | 860 | 1,080 | 1,055 | 620 | IBC, LA |
| | | | | 43 (18) | 3,080 | 113 | 115 | 2,510 | 2,355 | 1,340 | 1,780 | 1,705 | 755 | |
| | | | | 54 (16) | 4,330 | 128 | 137 | 4,120 | 3,590 | 1,850 | 2,645 | 2,470 | 1,120 | |
| | | | | 68 (14) | 5,150 | 141 | 153 | 6,530[15] | 4,570[15] | 1,850 | 2,645 | 2,470 | 1,120 | |
| RCKW3 and RCKW3S (stiffener) | 2 | (1) ½" | (9) #12 | 33 (20) | 3,335 | 164 | 175 | 2,790 | 2,590 | 1,310 | 1,730 | 1,665 | 620 | |
| | | | | 43 (18) | 4,215 | 164 | 175 | 3,935 | 3,465 | 1,710 | 2,390 | 2,250 | 795 | |
| | | | | 54 (16) | 5,160 | 164 | 175 | 6,700[15] | 4,585[15] | 2,220 | 3,410 | 3,085 | 1,120 | |
| | | | | 68 (14) | 5,160 | 164 | 175 | 6,700[15] | 4,585[15] | 2,410 | 3,875 | 3,425 | 1,415 | |
| RCKW5.5 | 3 | (1) ½" | (6) #12 | 30 (20 DW)[5,6] | 3,775 | 258 | 280 | 1,455 | 1,435 | 1,030 | 1,250 | 1,235 | 600 | |
| | | | | 30 (20 STR)[6] | 4,670 | 260 | 281 | 1,830 | 1,795 | 1,140 | 1,395 | 1,375 | 665 | |
| | | | | 33 (20) | 4,670 | 304 | 328 | 1,830 | 1,795 | 1,140 | 1,395 | 1,375 | 665 | |
| | | | | 43 (18) | 6,245 | 320 | 338 | 2,525 | 2,450 | 1,440 | 1,790 | 1,755 | 1,035 | |
| | | | | 54 (16) | 8,225 | 320 | 338 | 3,465 | 3,320 | 2,455 | 3,255 | 3,125 | 1,390 | |
| | | | | 68 (14) | 9,375 | 417 | 438 | 4,065 | 3,850 | 2,455 | 3,255 | 3,125 | 1,390 | |
| | 3A | (2) ⅜" | (6) #12 | 30 (20 DW)[5,6] | 3,775 | 258 | 280 | 770 | 765 | 1,030 | 1,250 | 1,235 | 600 | |
| | | | | 30 (20 STR)[6] | 4,670 | 260 | 281 | 955 | 950 | 1,140 | 1,395 | 1,375 | 665 | |
| | | | | 33 (20) | 4,670 | 304 | 328 | 955 | 950 | 1,140 | 1,395 | 1,375 | 665 | |
| | | | | 43 (18) | 6,245 | 333 | 355 | 1,285 | 1,275 | 1,440 | 1,790 | 1,755 | 1,035 | |
| | | | | 54 (16) | 8,865 | 412 | 439 | 1,845 | 1,830 | 2,455 | 3,255 | 3,125 | 1,390 | |
| | | | | 68 (14) | 11,620 | 489 | 519 | 2,455[16] | 2,420[16] | 2,455 | 3,255 | 3,125 | 1,390 | |
| | 3B | (2) ½" | (6) #12 | 30 (20 DW)[5,6] | 3,775 | 258 | 280 | 770 | 765 | 1,030 | 1,250 | 1,235 | 600 | |
| | | | | 30 (20 STR)[6] | 4,670 | 260 | 281 | 955 | 950 | 1,140 | 1,395 | 1,375 | 665 | |
| | | | | 33 (20) | 4,670 | 304 | 328 | 955 | 950 | 1,140 | 1,395 | 1,375 | 665 | |
| | | | | 43 (18) | 6,245 | 333 | 355 | 1,285 | 1,275 | 1,440 | 1,790 | 1,755 | 1,035 | |
| | | | | 54 (16) | 9,995 | 593 | 651 | 2,095 | 2,070 | 2,455 | 3,255 | 3,125 | 1,390 | |
| | | | | 68 (14) | 11,630 | 674 | 734 | 2,460 | 2,420 | 2,455 | 3,255 | 3,125 | 1,390 | |
| RCKW5.5 and RCKW5.5S (stiffener) | 4 | (1) ½" | (10) #12 | 33 (20) | 4,855 | 256 | 272 | 1,910 | 1,870 | 1,660 | 2,090 | 2,040 | 665 | |
| | | | | 43 (18) | 8,445 | 450 | 490 | 3,580 | 3,420 | 2,165 | 2,815 | 2,720 | 1,035 | |
| | | | | 54 (16) | 11,575 | 467 | 502 | 5,340[15] | 4,930[15] | 2,980 | 4,115 | 3,895 | 1,390 | |
| | | | | 68 (14) | 14,040 | 511 | 513 | 7,105[15] | 6,275[15] | 2,980 | 4,115 | 3,895 | 1,830 | |
| | 4A | (2) ⅜" | (10) #12 | 33 (20) | 4,855 | 256 | 272 | 990 | 985 | 1,660 | 2,090 | 2,040 | 665 | |
| | | | | 43 (18) | 8,445 | 450 | 490 | 1,755 | 1,740 | 2,165 | 2,815 | 2,720 | 1,035 | |
| | | | | 54 (16) | 12,920 | 530 | 576 | 2,750[16] | 2,705[16] | 2,980 | 4,115 | 3,895 | 1,390 | |
| | | | | 68 (14) | 14,300 | 626 | 678 | 3,065[16] | 3,010[16] | 2,980 | 4,115 | 3,895 | 1,830 | |
| | 4B | (2) ½" | (10) #12 | 33 (20) | 4,855 | 256 | 272 | 990 | 985 | 1,660 | 2,090 | 2,040 | 665 | |
| | | | | 43 (18) | 8,445 | 450 | 490 | 1,755 | 1,740 | 2,165 | 2,815 | 2,720 | 1,035 | |
| | | | | 54 (16) | 13,455 | 669 | 742 | 2,870 | 2,820 | 2,980 | 4,115 | 3,895 | 1,390 | |
| | | | | 68 (14) | 16,515 | 867 | 966 | 3,585 | 3,505 | 2,980 | 4,115 | 3,895 | 1,830 | |
| RCKW7.5 | 5 | (1) ½" | (6) #12 | 33 (20) | 6,445 | 389 | 402 | 1,815 | 1,790 | 1,095 | 1,315 | 1,300 | 795 | |
| | | | | 43 (18) | 8,200 | 510 | 536 | 2,345 | 2,300 | 1,280 | 1,550 | 1,530 | 1,200 | |
| | | | | 54 (16) | 11,400 | 554 | 571 | 3,370 | 3,275 | 2,165 | 2,715 | 2,655 | 1,695 | |
| | | | | 68 (14) | 13,895 | 605 | 628 | 4,225 | 4,065 | 2,165 | 2,715 | 2,655 | 1,695 | |
| | 5A | (2) ⅜" | (6) #12 | 33 (20) | 6,445 | 389 | 402 | 1,095 | 1,090 | 1,095 | 1,315 | 1,300 | 795 | |
| | | | | 43 (18) | 8,200 | 510 | 536 | 1,400 | 1,395 | 1,280 | 1,550 | 1,530 | 1,200 | |
| | | | | 54 (16) | 12,840 | 820 | 868 | 2,230[16] | 2,205[16] | 2,165 | 2,715 | 2,655 | 1,695 | |
| | | | | 68 (14) | 14,920 | 912 | 965 | 2,610[16] | 2,575[16] | 2,165 | 2,715 | 2,655 | 1,695 | |
| | 5B | (2) ½" | (6) #12 | 33 (20) | 6,445 | 389 | 402 | 1,095 | 1,090 | 1,095 | 1,315 | 1,300 | 795 | |
| | | | | 43 (18) | 8,200 | 510 | 536 | 1,400 | 1,395 | 1,280 | 1,550 | 1,530 | 1,200 | |
| | | | | 54 (16) | 13,255 | 867 | 927 | 2,305 | 2,280 | 2,165 | 2,715 | 2,655 | 1,695 | |
| | | | | 68 (14) | 15,640 | 912 | 965 | 2,745 | 2,705 | 2,165 | 2,715 | 2,655 | 1,695 | |
| RCKW7.5 and RCKW5.5S (stiffener) | 6 | (1) ½" | (10) #12 | 33 (20) | 8,705 | 495 | 517 | 2,505 | 2,450 | 1,730 | 2,130 | 2,095 | 795 | |
| | | | | 43 (18) | 10,915 | 591 | 623 | 3,210 | 3,125 | 2,255 | 2,840 | 2,775 | 1,200 | |
| | | | | 54 (16) | 14,045 | 689 | 720 | 4,275 | 4,115 | 2,625 | 3,360 | 3,265 | 1,695 | |
| | | | | 68 (14) | 16,670 | 689 | 720 | 5,245[15] | 4,985[15] | 2,665 | 3,420 | 3,320 | 2,065 | |
| | 6A | (2) ⅜" | (10) #12 | 33 (20) | 8,705 | 495 | 517 | 1,490 | 1,480 | 1,730 | 2,130 | 2,095 | 795 | |
| | | | | 43 (18) | 10,915 | 591 | 623 | 1,885 | 1,865 | 2,255 | 2,840 | 2,775 | 1,200 | |
| | | | | 54 (16) | 17,175 | 873 | 930 | 3,030[16] | 2,985[16] | 2,625 | 3,360 | 3,265 | 1,695 | |
| | | | | 68 (14) | 18,370 | 959 | 1,011 | 3,255[16] | 3,200[16] | 2,665 | 3,420 | 3,320 | 2,065 | |
| | 6B | (2) ½" | (10) #12 | 33 (20) | 8,705 | 495 | 517 | 1,490 | 1,480 | 1,730 | 2,130 | 2,095 | 795 | |
| | | | | 43 (18) | 10,915 | 591 | 623 | 1,885 | 1,865 | 2,255 | 2,840 | 2,775 | 1,200 | |
| | | | | 54 (16) | 19,940 | 923 | 991 | 3,550 | 3,490 | 2,625 | 3,360 | 3,265 | 1,695 | |
| | | | | 68 (14) | 22,555 | 1,040 | 1,107 | 4,060 | 3,975 | 2,665 | 3,420 | 3,320 | 2,065 | |

See footnotes on p. 105.

C-CF-2020 ©2020 SIMPSON STRONG-TIE COMPANY INC.

# **RCKW** Kneewall Connectors



## RCKW Allowable Load — Concrete Application Footnotes

1. For additional important information, see General Information and Notes on p. 22.
2. The designer is responsible for anchorage design.
3. See illustrations for fastener pattern placement.
4. Tabulated values are based on framing members with track and stud of the same thickness and (1) #10 screw into each stud flange unless otherwise noted.
5. Tabulated values may be used for framing members with track and stud of thickness 20 mil, $F_y$ = 57 ksi (20 EQ).
6. Tabulated values are applicable for framing members with CFS track of thickness 20 mil, $F_y$ = 57 ksi (20 EQ).
7. EQ — equivalent, DW — drywall, STR — structural.
8. Tabulated moment values correspond to maximum connector strength without consideration of serviceability. designer must check out-of-plane deflections using tabulated Rotational Stiffness.
9. Tabulated Assembly Rotational Stiffness is applicable for walls at 38" tall with corresponding framing member depth and thickness. Reference Example #1 on p. 107.
10. Tabulated Connector Rotational Stiffness may be used for any wall heights; the designer must consider member deflection due to bending in the stud member. Reference Example #2 on pp. 108–109.
11. Per IBC 2015 Table 1604.3 footnote f, wind load is permitted to be taken as 0.42 times "component and cladding loads" for deflection checks. For IBC 2009 and earlier, the factor is 0.7 instead of 0.42. Tabulated values have not been adjusted.
12. Anchor tension, T, is the force in the anchor, or both anchors for two-anchor solutions, at maximum allowable, M, or maximum allowable tension, $F_2$.
13. Tabulated values for anchor tension, T, at allowable tension load, $F_2$, are provided for total anchor tension for (1) anchor and (2) anchors. See p. 110 for anchorage design tables and illustrations.
14. Anchor tension is calculated using AISC Steel Design Guide 1. The 'Anchor Bolt Design' illustration (Figures A and B) shows the anchor tension, T, based on an applied moment, M. An illustration for the anchor tension, T, based on a vertical tension load, $F_2$, shown in Figure C.
15. Tabulated allowable tension loads for the connectors with ½"-diameter anchor bolts require ASTM F3125, Grade A325 or ASTM A449 high-strength bolts. For A307 Grade A bolt, anchor tension load is limited to 4,410 lb.
16. Tabulated allowable tension loads for the connectors with ⅜"-diameter anchor bolts require ASTM F3125, Grade A325 or ASTM A449 high-strength bolts. For A307 Grade A bolt, anchor tension load is limited to 2,200 lb.
17. Anchor tension, T, may be interpolated.

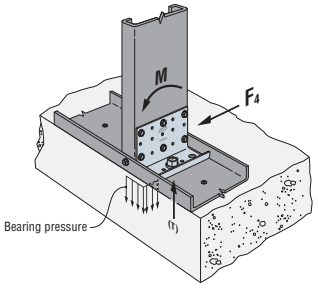


**Figure A — Anchor Tension, T, Created from Moment** *(one anchor)*

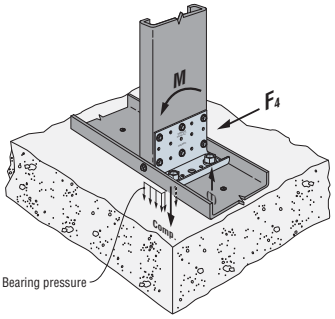


**Figure B — Anchor Tension, T, Created from Moment** *(two anchors)*

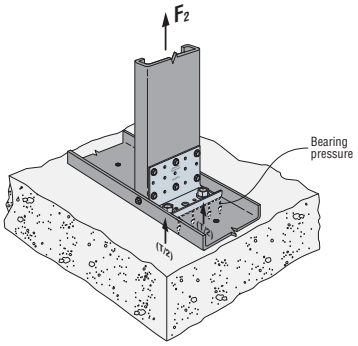


**Figure C — Anchor Tension, T, Created from $F_2$**

## RCKW3 and RCKW3S Options

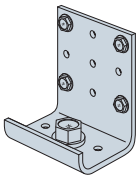

**RCKW3**
**Fastener Pattern 1**

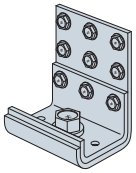

**RCKW3 with RCKW3S**
**Fastener Pattern 2**

## RCKW5.5 and RCKW5.5S Options

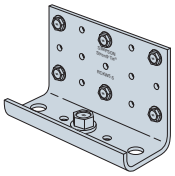

**RCKW5.5**
**Fastener Pattern 3**

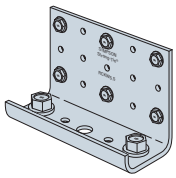

**RCKW5.5**
**Fastener Pattern 3A, 3B**

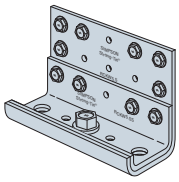

**RCKW5.5 with RCKW5.5S**
**Fastener Pattern 4**

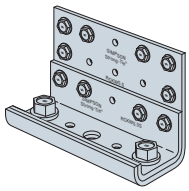

**RCKW5.5 with RCKW5.5S**
**Fastener Pattern 4A, 4B**

## RCKW7.5 and RCKW5.5S Options

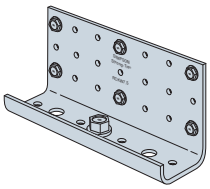

**RCKW7.5**
**Fastener Pattern 5**

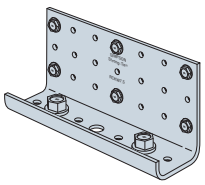

**RCKW7.5**
**Fastener Pattern 5A, 5B**

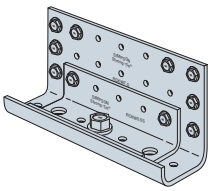

**RCKW7.5 with RCKW5.5S**
**Fastener Pattern 6**

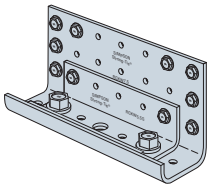

**RCKW7.5 with RCKW5.5S**
**Fastener Pattern 6A, 6B**

C-CF-2020 ©2020 SIMPSON STRONG-TIE COMPANY INC.

# **RCKW** Kneewall Connectors



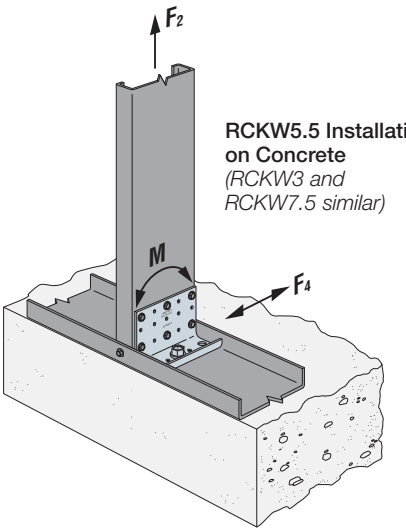


**RCKW5.5 Installation on Concrete**
*(RCKW3 and RCKW7.5 similar)*

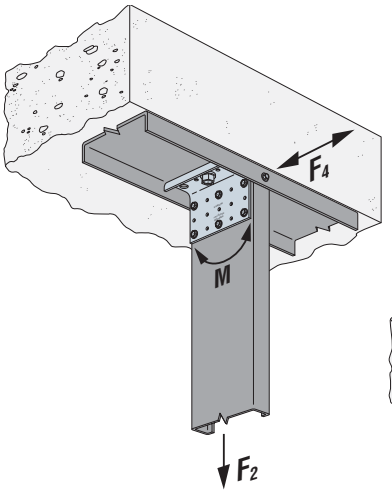


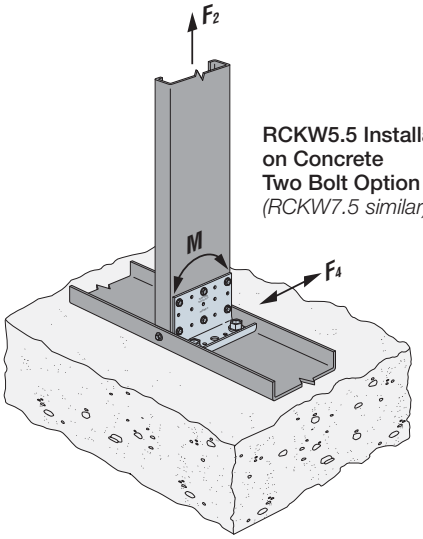


**RCKW5.5 Installation on Concrete Two Bolt Option**
*(RCKW7.5 similar)*

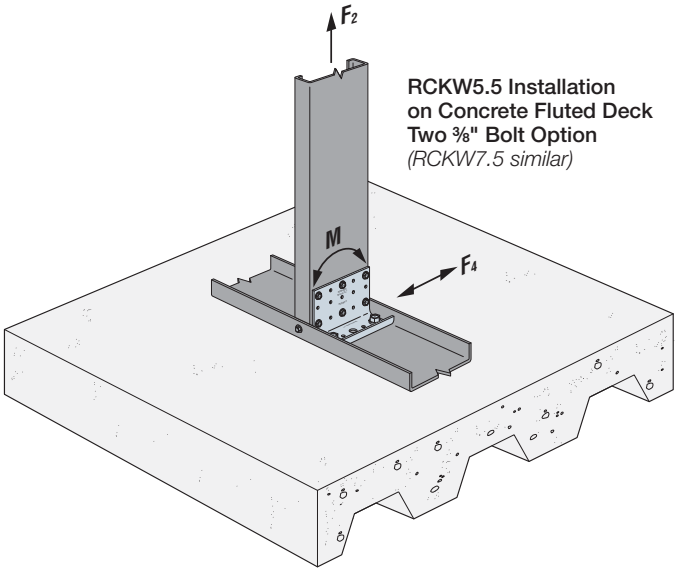


**RCKW5.5 Installation on Concrete Fluted Deck Two ⅜" Bolt Option**
*(RCKW7.5 similar)*

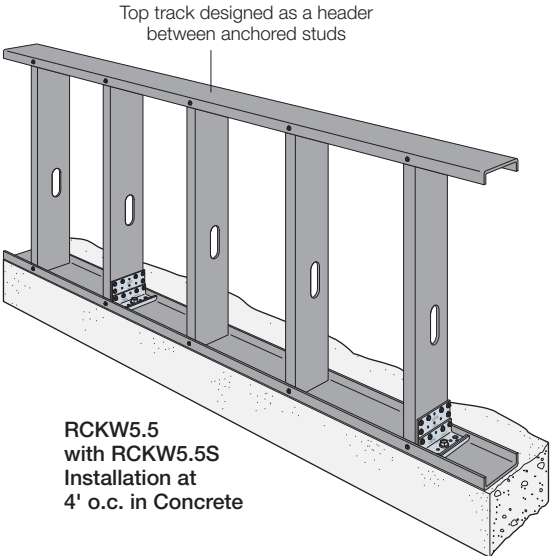


**RCKW5.5 with RCKW5.5S Installation at 4' o.c. in Concrete**

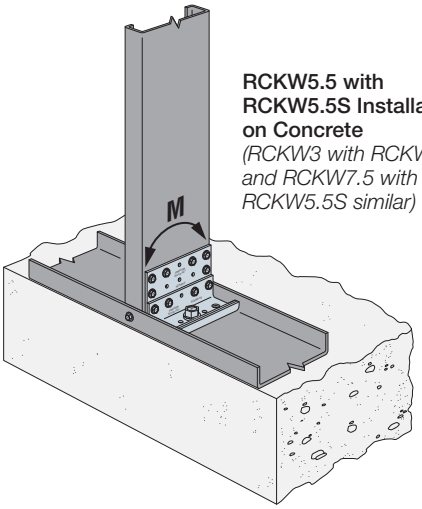


**RCKW5.5 with RCKW5.5S Installation on Concrete**
*(RCKW3 with RCKW3S and RCKW7.5 with RCKW5.5S similar)*

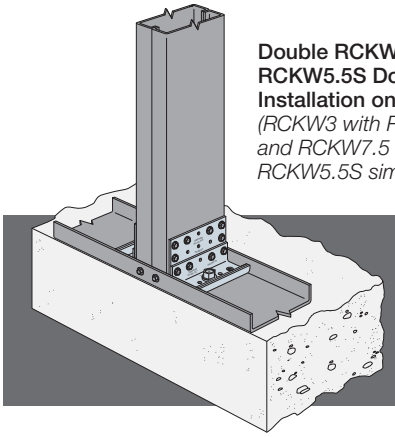

**Double RCKW5.5 with RCKW5.5S Double-Stud Installation on Concrete**
*(RCKW3 with RCKW3S and RCKW7.5 with RCKW5.5S similar)*

**Need to replace a prefabricated post, or having trouble with concrete anchorage? Consider using this detail.**

C-CF-2020 ©2020 SIMPSON STRONG-TIE COMPANY INC.

## Example #1: Exterior Parapet Stud

### Given:

- 2015 IBC (ASCE 7-10 and AISI S100-2012)
- 600S162-33 (33 ksi) studs @ 16" o.c. supported at the base
- Parapet height, L = 38"-tall studs
- Wind design pressure = 49.67 psf (LRFD)
- Deflection Limits, $\Delta_{allow}$ = L/240 (Ref. IBC Table 1604.3)
- 3,000 psi concrete, cracked, SDC A&B, 3" anchor edge

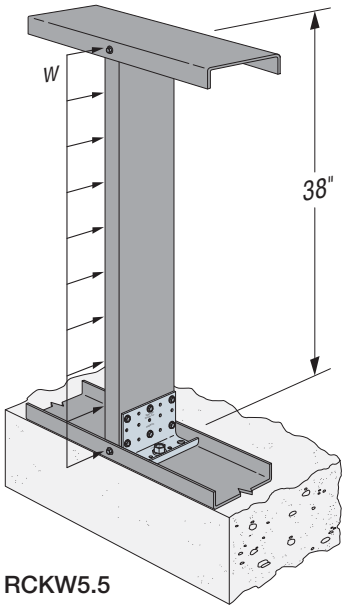


RCKW5.5

### Calculations:

**Determine ASD wind pressure:**

$p = (0.6)(49.67\ psf) = 29.8\ psf$

**Note:** 2015 IBC load combinations for ASD include a factor of 0.6 for wind loads.

$$w = (29.8\ psf)\frac{16\ in.}{12\ in.} = 39.7\ plf$$

**Determine Required Moment:**

$$M_{req} = \frac{wL^2}{2} = \frac{(39.7\ plf)(38\ in.)^2}{2\left(12\frac{in.}{ft.}\right)} = 2{,}389\ in.\text{-}lb.$$

From Table 1 (p. 104) for 600S162-33, 6"-deep 33-mil stud:

- Select RCKW5.5 connector, fastener pattern 3, with ½" anchor diameter and (6) #12 self-drilling screws, attaching to each stud @ 16" o.c.
- Allowable Moment = 4,670 in.-lb. > 2,389 in.-lb. **OK**
- Assembly Rotational Stiffness, β = 304,000 in.-lb. / rad. for RCKW5.5 connector at 38" wall height

**Check Deflection at Required Moment:**

$$\Delta_{req} = \left(\frac{(0.7)(M_{req})}{\beta}\right)L = \left(\frac{(0.7)(2{,}389\ in.\text{-}lb.)}{304{,}000\frac{in.\text{-}lb.}{rad.}}\right)38\ in. = 0.209\ in.$$

**Note:** Per IBC Table 1604.3 footnote f, 0.42 factor can be used to calculate deflections for components and cladding wind loads for LRFD loads. ASD load conversion is 0.7.

**Allowable Deflection:**

$$\Delta_{allow} = \frac{2L}{240} = \frac{2(38\ in.)}{240} = 0.317\ in. > 0.209\ in.\ \textbf{OK}$$

**Select Anchorage:**

Normal weight concrete with $f'_c$ = 3,000 psi
Table 2A (p. 111) — Cracked Concrete, Wind and Seismic in SDC A&B

Titen HD® with 3¼" embedment

$V_a$ = 39.7*38/12=125.7 lb.

$N_a$ = 2,389/4,670*1,830 = 936 (interpolate from Table 1 (p. 104))

$V_{al}$ = 930*0.86 = 799.8

$N_{al}$ = 1,335*0.86 = 1,148.1

***Note:** 0.86 comes from note 11, Table 2A (p. 112) (3,000 psi concrete)

$V_a/V_{al}$ = 125.7/799.8 = 0.16 < 1 **OK**

$N_a/N_{al}$ = 936/1,148.1 = 0.82 < 1 **OK**

Interaction = 0.16 + 0.82 = 0.98 < 1.2 **OK**

**Computer-Assisted Design Note:**
Please use kneewall module in Simpson Strong-Tie® CFS Designer™.

C-CF-2020 ©2020 SIMPSON STRONG-TIE COMPANY INC.

# Example #2: High Interior Half-Wall — Concrete Slab, No Edge, Two Anchor

## Given:

- 2015 IBC (ASCE 7-10 and AISI S100-2012)
- The top track 600T125-54 (50 ksi) spans between 600S162-54 (50 ksi) studs @ spacing, S = 32" o.c. supported at the base
- 6" drywall studs at 16" o.c. as infill between the bottom and top track
- Wall height, L = 48"-tall studs
- Design Load: w = 50 plf or P = 200 lb. concentrated load for guard or handrail applications in accordance with Section 4.5.1 of ASCE (Ref. IBC 1607.8.1 and 1607.8.1.1)
- Deflection Limit, $\Delta_{allow}$ = L/120 (Ref. IBC Table 1604.3)
- 4,000 psi NWC, uncracked A&B, no edge, 5" concrete thickness

## Calculations:

### Design criteria #1 for linear load of 50 lb./ft.

**Determine Required Concentrated Load, $P_{req}$:**

$$P = (w)(S) = (50\ plf)(32\ in.)\left(\frac{1\ ft.}{12\ in.}\right) = 133.3\ lb.$$

**Determine Required Moment, $M_{req}$:**

$$M_{req} = (P_{req})(L) = (133.3\ lb.)(48\ in.) = 6{,}400\ in.\text{-}lb.$$

### Design criteria #2 for concentrated load of 200 lb.

**Note:** From a 3D structural analysis with the 200 lb. concentrated load at the end stud, a continuous top track distributes some load to adjacent studs so that the worst-case moment is $M_{req(max)}$ = 7,513 in.-lb. and maximum shear is $V_{req(max)}$ = 157 lb. as indicated in the illustration.

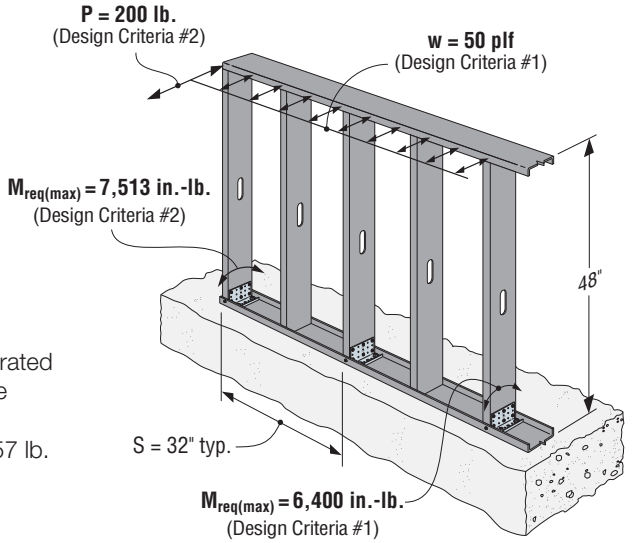


RCKW5.5 Installation on Concrete

**From Table 1 (p. 104) for 600S162-54, 6"-deep, 54-mil stud:**

- Select a RCKW5.5 connector, screw pattern 3B with (6) #12 self-drilling screws and (2) ½"-diameter anchors
- Allowable Moment = 9,995 in.-lb. > 6,400 in.-lb. (for linear load) **OK**
- Allowable Moment = 9,995 in.-lb. > 7,513 in.-lb. (for concentrated load) **OK**
- Connector Rotational Stiffness $\beta_c$ = 651,000 in.-lb. / rad.

## Check Deflection for Design Criteria #1 at Required Load:

**Determine Stud Deflection, $\Delta_s$, at $P_{req}$ = 133.3 lb.**

$$\Delta_s = \frac{P_{req}L^3}{3EI_{xe}} = \left(\frac{(133.3\ lb.)(48\ in.)^3}{3(29{,}500{,}000\ psi)(2.86\ in.^4)}\right) = 0.058\ in.$$

**Note:** Effective moment of inertia for a 600S162-54 stud is $I_{xe}$ = 2.86 in.$^4$

**Determine Connector Deflection, $\Delta_c$, at $M_{req}$ = 6,400 in.-lb. by utilizing the Connector Rotational Stiffness, $\beta_c$ = 651,000 in.-lb. / rad. for RCKW5.5.**

$$\Delta_c = \frac{M_{req}}{\beta_c}L = \frac{6{,}400\ in.\text{-}lb.}{651{,}000\ \frac{in.\text{-}lb.}{rad.}}(48\ in.) = 0.472\ \text{in.}$$

**Note:** The Connector Rotational Stiffness may be used for any wall height; the designer must consider member deflection due to bending in the stud member. See footnote 10 of Table 1 (p. 105).

C-CF-2020 ©2020 SIMPSON STRONG-TIE COMPANY INC.

## Example #2: High Interior Half-Wall — Concrete Slab, No Edge, Two Anchor (cont.)

**Total Deflection is the sum of the Stud Deflection and the Connector Deflection.**

$$\Delta_{total} = \Delta_s + \Delta_c = 0.058\ in. + 0.472\ in. = 0.53\ in.$$

**Allowable Deflection:**

$$\Delta_{allow} = \frac{2L}{120} = \frac{(2)(48\ in.)}{120} = 0.800\ in. > 0.53\ in.\ \textbf{OK}$$

### Check Deflection for Design Criteria #2 at Required Load:

**Determine Stud Deflection, $\Delta_s$, at $M_{req}$ = 7,513 in.-lb. from concentrated load.**

$$\Delta_s = \frac{M_{req}L^2}{3EI_{xe}} = \left(\frac{(7{,}513\ in.\text{-}lb.)(48\ in.)^2}{3(29{,}500{,}000\ psi)(2.86\ in.^4)}\right) = 0.068\ in.$$

**Determine Connector Deflection, $\Delta_c$, at $M_{req}$ = 7,513 in.-lb. by utilizing the Connector Rotational Stiffness, $\beta_c$ = 651,000 in.-lb. / rad. for RCKW5.5.**

$$\Delta_c = \frac{M_{req}}{\beta_c} L = \frac{7{,}513\ in.\text{-}lb.}{651{,}000\ \frac{in.\text{-}lb.}{rad.}} (48\ in.) = 0.554\ in.$$

**Total Deflection is the sum of Stud Deflection and Connector Deflection.**

$$\Delta_{total} = \Delta_s + \Delta_c = 0.068\ in. + 0.554\ in. = 0.622\ in.$$

**Allowable Deflection:**

$$\Delta_{allow} = \frac{2L}{120} = \frac{(2)(48\ in.)}{120} = 0.800\ in. > 0.622\ in.\ \textbf{OK}$$

**Select Anchorage:**

Normal-weight concrete with $f'_c$ = 4,000 psi
Table 2A (p. 110) — Uncracked Concrete Wind and Seismic in SDC A&B (2) ½"-diameter Titen HD® with 3¼" embedment
$V_a$ = 157 lb.
$V_{al}$ = 3,765 lb. Table 2A (p. 9) two anchors assumed to act in shear with no edge condition.
$V_a/V_{al}$ = 157 lb./3,765 lb. = 0.04 < 1 **OK**
Interpolation of $N_a$, anchor tension, at M = 7,513 in.-lb.
$N_a$ = 7,513/9,995*2,070 = 1,556 lb. Table 1 (p. 104)
$N_{al}$ = 2,130 lb. Table 2A (p. 110) **Only one-anchor acts in tension with no edge condition.**
$N/N_{al}$ = 1,556 lb. / 2,130 lb. = 0.73 < 1 **OK**
Interaction = 0.04 + 0.73 = 0.77 < 1.2 **OK**

**Note:** Per ASCE Section 4.5.1, for handrail and guardrail systems, there is no need to apply the 50 plf linear load and the 200 lb. concentrated load concurrently. Example #2 demonstrates the design for both loading cases, and the outermost anchored stud governs when using the 200 lb. concentrated load.

**Computer-Assisted Design Note:**
Please use kneewall module in Simpson Strong-Tie® CFS Designer™.



C-CF-2020 ©2020 SIMPSON STRONG-TIE COMPANY INC.

# **RCKW** Kneewall Connectors



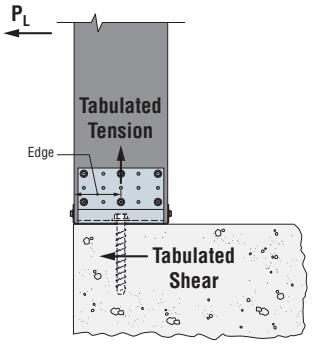


Figure 2A-1
Single Anchor —
One Anchor Shear,
One Anchor Tension
*(tension from moment created from $P_L$)*

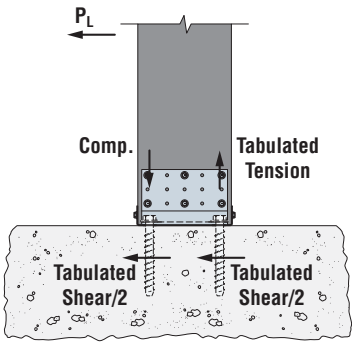


Figure 2A-2
Two Anchors —
Two Anchors Shear,
One Anchor Tension
*(tension from moment created from $P_L$)*

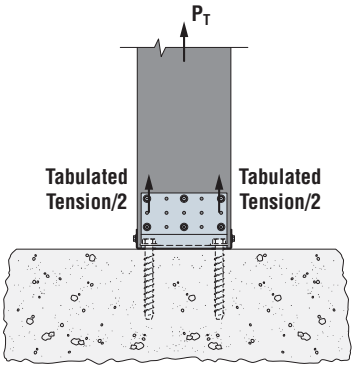


Figure 2A-3
Two Anchors —
Two Anchors Tension
*(tension created from $P_T$)*

## Table 2A: RCKW Allowable Tension and Shear Loads Using ½"-Diameter Anchor

| Model No. (Min. Anchor Edge Distance) | Type of Concrete | Load Type | No. of ½"-Diameter Anchor (Acting in Load Type Indicated) | Allowable Tension and Shear Load (lb.) | | | | | | | | | | |
|---|---|---|---|---|---|---|---|---|---|---|---|---|---|---|
| | | | | Titen HD® | Titen HD | Strong-Bolt® 2 | AT-XP® | SET-XP® | SET-3G™ | SET-XP | SET-3G | AT-XP | SET-XP | SET-3G |
| | | | | Minimum Concrete Thickness, $h_{min}$ (in.) | | | | | | | | | | |
| | | | | 5 | 6 | 6 | 6 | 6 | 6 | 6½ | 6½ | 9½ | 9½ | 9½ |
| | | | | Nominal Embedment Depth, $h_{nom}$ (in.) | | | | | | | | | | |
| | | | | 3¼ | 3¾ | 3⅞ | 3½ | 3½ | 4¾ | 4 | 5¼ | 7 | 7 | 8¼ |
| Uncracked Concrete, Wind and Seismic in SDC A and B[8,10] ($f'_c$ = 4,000 psi) | | | | | | | | | | | | | | |
| RCKW3 (Edge = 1⅞") | SLWC | Tension | 1 | 815 | 910 | — | 435 | 525 | 525 | — | — | — | — | — |
| | | Shear | 1 | 410 | 425 | — | 445 | 445 | 455 | — | — | — | — | — |
| | NWC | Tension | 1 | 1,200 | 1,340 | — | 855 | 960 | 1,005 | — | — | — | — | — |
| | | Shear | 1 | 605 | 625 | — | 655 | 655 | 675 | — | — | — | — | — |
| RCKW5.5 (Edge = 3") | SLWC | Tension | 1 | 1,270 | 1,465 | — | 655 | 780 | 760 | — | — | — | — | — |
| | | Shear | 1 | 815 | 915 | — | 960 | 960 | 985 | — | — | — | — | — |
| | NWC | Tension | 1 | 1,865 | 2,150 | — | 1,280 | 1,495 | 1,435 | — | — | — | — | — |
| | | Shear | 1 | 1,305 | 1,350 | — | 1,410 | 1,410 | 1,450 | — | — | — | — | — |
| RCKW7.5 (Edge = 4") | SLWC | Tension | 1 | 1,450 | 1,800 | 1,415 | 875 | 1,025 | 995 | — | — | — | — | — |
| | | Shear | 1 | 1,245 | 1,410 | 1,465 | 1,480 | 1,480 | 1,520 | — | — | — | — | — |
| | NWC | Tension | 1 | 2,130 | 2,645 | 2,080 | 1,720 | 1,925 | 1,870 | — | — | — | — | — |
| | | Shear | 1 | 1,830 | 2,075 | 2,160 | 1,880 | 1,880 | 1,925 | — | — | — | — | — |
| RCKW All models (no edge) | SLWC | Tension | 1 | 1,450 | 1,865 | 1,765 | 1,470 | 1,830 | 2,815 | 2,090 | 3,110 | 2,940 | 3,660 | 3,705 |
| | | | 2 | 2,375 | 2,875 | 3,525 | 2,020 | 2,445 | 3,730 | 2,795 | 4,120 | 4,045 | 4,890 | 6,480 |
| | | Shear | 1 | 1,560 | 2,685 | 2,820 | 1,925 | 1,925 | 1,925 | 1,925 | 1,925 | 1,925 | 1,925 | 1,925 |
| | | | 2 | 2,560 | 5,370 | 5,645 | 3,855 | 3,855 | 3,855 | 3,855 | 3,855 | 3,855 | 3,855 | 3,855 |
| | NWC | Tension | 1 | 2,130 | 2,745 | 2,595 | 2,885 | 3,355 | 3,705 | 3,705 | 3,705 | 3,705 | 3,705 | 3,705 |
| | | | 2 | 3,495 | 4,225 | 5,185 | 3,965 | 4,795 | 6,985 | 5,475 | 7,410 | 7,410 | 7,410 | 7,410 |
| | | Shear | 1 | 2,295 | 2,685 | 2,820 | 1,925 | 1,925 | 1,925 | 1,925 | 1,925 | 1,925 | 1,925 | 1,925 |
| | | | 2 | 3,765 | 5,370 | 5,645 | 3,855 | 3,855 | 3,855 | 3,855 | 3,855 | 3,855 | 3,855 | 3,855 |

Table continued on next page.

C-CF-2020 ©2020 SIMPSON STRONG-TIE COMPANY INC.

## Table 2A: RCKW Allowable Tension and Shear Loads Using ½"-Diameter Anchor (cont.)

| Model No. (Min. Anchor Edge Distance) | Type of Concrete | Load Type | No. of ½"-Diameter Anchor (Acting in Load Type Indicated) | Allowable Tension and Shear Load (lb.) | | | | | | | | | | |
|---|---|---|---|---|---|---|---|---|---|---|---|---|---|---|
| | | | | Titen HD® | Titen HD | Strong-Bolt® 2 | AT-XP® | SET-XP® | SET-3G™ | SET-XP | SET-3G | AT-XP | SET-XP | SET-3G |
| | | | | Minimum Concrete Thickness, $h_{min}$ (in.) | | | | | | | | | | |
| | | | | 5 | 6 | 6 | 6 | 6 | 6 | 6½ | 6½ | 9½ | 9½ | 9½ |
| | | | | Nominal Embedment Depth, $h_{nom}$ (in.) | | | | | | | | | | |
| | | | | 3¼ | 3¾ | 3⅞ | 3½ | 3½ | 4¾ | 4 | 5¼ | 7 | 7 | 8¼ |
| **Cracked Concrete, Wind and Seismic in SDC A and B[8,10] ($f'_c$ = 4,000 psi)** | | | | | | | | | | | | | | |
| RCKW3 (Edge = 1⅞") | SLWC | Tension | 1 | 585 | 645 | — | 355 | — | 585 | 320 | 645 | 710 | 560 | 1,015 |
| | | Shear | 1 | 295 | 305 | — | 320 | — | 325 | 325 | 325 | 325 | 325 | 325 |
| | NWC | Tension | 1 | 860 | 950 | — | 700 | — | 1,145 | 630 | 1,265 | 1,395 | 1,100 | 1,985 |
| | | Shear | 1 | 430 | 445 | — | 465 | — | 480 | 480 | 480 | 480 | 480 | 480 |
| RCKW5.5 (Edge = 3") | SLWC | Tension | 1 | 910 | 1,040 | — | 535 | — | 840 | 465 | 930 | 1,065 | 815 | 1,460 |
| | | Shear | 1 | 635 | 655 | — | 685 | — | 705 | 705 | 705 | 705 | 705 | 705 |
| | NWC | Tension | 1 | 1,335 | 1,530 | — | 1,045 | — | 1,650 | 915 | 1,820 | 2,090 | 1,600 | 2,815 |
| | | Shear | 1 | 930 | 965 | — | 1,010 | — | 1,035 | 1,035 | 1,035 | 1,035 | 1,035 | 1,035 |
| RCKW7.5 (Edge = 4") | SLWC | Tension | 1 | 1,025 | 1,280 | 1,255 | 715 | — | 1,100 | 615 | 1,220 | 1,435 | 1,075 | 1,915 |
| | | Shear | 1 | 890 | 1,010 | 1,050 | 1,055 | — | 1,085 | 1,085 | 1,085 | 1,085 | 1,085 | 1,085 |
| | NWC | Tension | 1 | 1,510 | 1,880 | 1,845 | 1,405 | — | 2,160 | 1,205 | 2,390 | 2,810 | 2,110 | 3,370 |
| | | Shear | 1 | 1,310 | 1,485 | 1,540 | 1,550 | — | 1,595 | 1,595 | 1,595 | 1,595 | 1,595 | 1,595 |
| RCKW All models (no edge) | SLWC | Tension | 1 | 1,025 | 1,320 | 1,255 | 960 | — | 1,710 | 925 | 1,890 | 1,915 | 1,615 | 2,970 |
| | | | 2 | 1,685 | 2,035 | 2,505 | 1,315 | — | 2,265 | 1,240 | 2,505 | 2,630 | 2,170 | 3,940 |
| | | Shear | 1 | 1,105 | 2,465 | 2,820 | 1,925 | — | 1,925 | 1,925 | 1,925 | 1,925 | 1,925 | 1,925 |
| | | | 2 | 1,815 | 4,380 | 5,500 | 3,350 | — | 3,855 | 3,155 | 3,855 | 3,855 | 3,855 | 3,855 |
| | NWC | Tension | 1 | 1,510 | 1,945 | 1,845 | 1,880 | — | 3,355 | 1,810 | 3,705 | 3,705 | 3,170 | 3,705 |
| | | | 2 | 2,475 | 2,990 | 3,685 | 2,580 | — | 4,445 | 2,430 | 4,915 | 5,160 | 4,250 | 7,410 |
| | | Shear | 1 | 1,625 | 2,685 | 2,820 | 1,925 | — | 1,925 | 1,925 | 1,925 | 1,925 | 1,925 | 1,925 |
| | | | 2 | 2,665 | 5,370 | 5,645 | 3,855 | — | 3,855 | 3,855 | 3,855 | 3,855 | 3,855 | 3,855 |
| **Cracked Concrete, Seismic in SDC C Through F[9,10] ($f'_c$ = 4,000 psi)** | | | | | | | | | | | | | | |
| RCKW3 (Edge = 1⅞") | SLWC | Tension | 1 | 205 | 225 | — | 105 | — | 185 | 110 | 205 | 210 | 195 | 320 |
| | | Shear | 1 | 135 | 140 | — | 150 | — | 150 | 150 | 150 | 150 | 150 | 150 |
| | NWC | Tension | 1 | 300 | 335 | — | 210 | — | 360 | 220 | 400 | 415 | 385 | 625 |
| | | Shear | 1 | 200 | 210 | — | 220 | — | 225 | 225 | 225 | 225 | 225 | 225 |
| RCKW5.5 (Edge = 3") | SLWC | Tension | 1 | 320 | 365 | — | 160 | — | 265 | 165 | 295 | 315 | 285 | 460 |
| | | Shear | 1 | 295 | 305 | — | 320 | — | 330 | 330 | 330 | 330 | 330 | 330 |
| | NWC | Tension | 1 | 470 | 535 | — | 310 | — | 520 | 320 | 575 | 620 | 560 | 900 |
| | | Shear | 1 | 435 | 450 | — | 470 | — | 485 | 485 | 485 | 485 | 485 | 485 |
| RCKW7.5 (Edge = 4") | SLWC | Tension | 1 | 360 | 450 | 440 | 215 | — | 345 | 215 | 385 | 425 | 375 | 605 |
| | | Shear | 1 | 415 | 470 | 490 | 495 | — | 505 | 505 | 505 | 505 | 505 | 505 |
| | NWC | Tension | 1 | 530 | 660 | 645 | 420 | — | 680 | 420 | 750 | 835 | 740 | 1,180 |
| | | Shear | 1 | 610 | 690 | 720 | 725 | — | 675 | 700 | 675 | 745 | 700 | 675 |
| RCKW All models (no edge) | SLWC | Tension | 1 | 360 | 465 | 440 | 285 | — | 540 | 325 | 595 | 570 | 565 | 935 |
| | | | 2 | 590 | 710 | 875 | 390 | — | 715 | 435 | 790 | 785 | 760 | 1,240 |
| | | Shear | 1 | 515 | 805 | 1,185 | 765 | — | 675 | 700 | 675 | 765 | 700 | 675 |
| | | | 2 | 845 | 1,610 | 2,225 | 1,330 | — | 1,350 | 1,405 | 1,350 | 1,530 | 1,405 | 1,350 |
| | NWC | Tension | 1 | 530 | 680 | 645 | 560 | — | 1,055 | 635 | 1,170 | 1,115 | 1,110 | 1,730 |
| | | | 2 | 865 | 1,045 | 1,290 | 770 | — | 1,400 | 850 | 1,550 | 1,535 | 1,490 | 2,435 |
| | | Shear | 1 | 760 | 805 | 1,185 | 765 | — | 675 | 700 | 675 | 765 | 700 | 675 |
| | | | 2 | 1,245 | 1,610 | 2,370 | 1,530 | — | 1,350 | 1,405 | 1,350 | 1,530 | 1,405 | 1,350 |

See footnotes on p. 112.

C-CF-2020 ©2020 SIMPSON STRONG-TIE COMPANY INC.

# **RCKW** Kneewall Connectors



## Table 2B: RCKW Allowable Tension and Shear Loads Using (2) ⅜"-Diameter Anchors

| Model No. (Min. Anchor Edge Distance) | Type of Concrete | Load Type | No. of ⅜"-Diameter Anchor (Acting in Load Type Indicated) | Allowable Tension and Shear Load (lb.) | | |
|---|---|---|---|---|---|---|
| | | | | Titen HD® | Strong-Bolt® 2 | SET-3G™ |
| | | | | Minimum Concrete Thickness, $h_{min}$ (in.) | | |
| | | | | 4 Slab and 3¼ Top of Metal Deck | 4 | 4 |
| | | | | Nominal Embedment Depth, $h_{nom}$ (in.) | | |
| | | | | 2½ | 2¼ | 2¾ |
| **Uncracked Concrete, Wind and Seismic in SDC A and B[8,10] ($f'_c$ = 4,000 psi)** | | | | | | |
| RCKW5.5 RCKW7.5 (no edge) | SLWC | Tension | 1 | 905 | 885 | 1,410 |
| | | | 2 | 1,750 | 1,765 | 2,010 |
| | | Shear | 1 | 1,020 | 700 | 1,060 |
| | NWC | Tension | 1 | 1,330 | 1,300 | 2,035 |
| | | | 2 | 2,575 | 2,595 | 3,935 |
| | | Shear | 1 | 1,500 | 700 | 1,060 |
| **Cracked Concrete, Wind and Seismic in SDC A and B[8,10] ($f'_c$ = 4,000 psi)** | | | | | | |
| RCKW5.5 RCKW7.5 (no edge) | SLWC | Tension | 1 | 415 | 620 | 820 |
| | | | 2 | 830 | 1,245 | 1,170 |
| | | Shear | 1 | 725 | 700 | 1,060 |
| | NWC | Tension | 1 | 610 | 915 | 1,610 |
| | | | 2 | 1,220 | 1,830 | 2,295 |
| | | Shear | 1 | 1,065 | 700 | 1,060 |
| **Cracked Concrete, Seismic in SDC C Through F[9,10] ($f'_c$ = 4,000 psi)** | | | | | | |
| RCKW5.5 RCKW7.5 (no edge) | SLWC | Tension | 1 | 145 | 220 | 290 |
| | | | 2 | 290 | 435 | 410 |
| | | Shear | 1 | 335 | 330 | 370 |
| | NWC | Tension | 1 | 215 | 320 | 565 |
| | | | 2 | 425 | 640 | 805 |
| | | Shear | 1 | 480 | 330 | 370 |

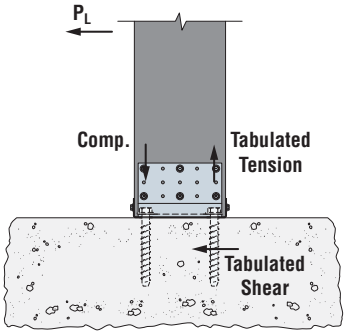


**Figure 2B-1**
**Two Anchors — One Anchor Shear**, One Anchor Tension**
*(tension from moment created from $P_L$)*
***One anchor acting in shear due to ⅜" anchor in larger hole.*

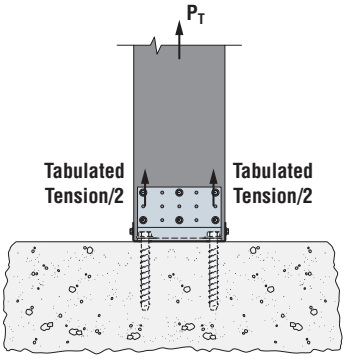


**Figure 2B-2**
**Two Anchors — Two Anchors Tension**
*(tension created from $P_T$)*

**Table 2A and 2B Notes:**

1. Anchor Allowable Loads have been determined using ACI 314-14 Chapter 17 anchorage calculations with the minimum concrete compressive strength, $f'_c$, and slab thickness listed. Sand-Lightweight Concrete is abbreviated as 'SLWC', Normal Weight Concrete is abbreviated as 'NWC'.
2. Load values are for anchor based on ACI 318-14, condition B, load factors from ACI 318 Section 5.3, no supplemental edge reinforcement, $\Psi_{c,V}$ = 1.0 for cracked concrete and periodic special inspection. Reference ICC-ES or IAPMO-UES evaluation reports for further information.
3. Load values are based on short-term temperature range of 150°F, 160°F and 180°F for SET-XP®, SET-3G and AT-XP® adhesives, respectively. Long-term temperature range is assumed to be 110°F for SET-XP, SET-3G and AT-XP adhesives.
4. Allowable Stress Design (ASD) values were determined by multiplying calculated Strength Design values by a conversion factor, Alpha (α), of 0.7 for seismic loads and 0.6 for wind loads. ASD values for other load combinations may be determined using alternate conversion factors.
5. End distances are assumed as 1.5 x Min. Edge Distance in one direction and 'N/A' in the other direction. See figure on this page.
6. Edge and end distances are assumed as 'N/A' in all directions at locations for (No Edge).
7. Tabulated anchorage capacities for RCKW models shown are applied to the same model size with stiffener. For example, a value for model RCKW3 is equivalent to model RCKW3 and RCKW3S.
8. Tabulated allowable ASD loads for Wind and Seismic in SDC A and B are based on using wind conversion factors and may be increased by 1.17 for seismic SDC A and B only.
9. Allowable loads have been divided by an Omega (Ω) seismic factor of 2.5 for brittle failure as required by ACI 318-14 Chapter 17, unless steel failure governs.
10. Tabulated capacities are based on maximum allowable anchorage loads only. The capacity of the connection system shall be the minimum of the tabulated value and the RCKW allowable load value listed on p. 104.
11. Tabulated loads in Tables 2A and 2B are based on $f'_c$ = 4,000 psi. For $f'_c$ = 3,000 psi, use an adjustment factor of 0.86 for the blue shaded values and 1.0 for all other values.
12. For anchor subjected to both tension and shear loads, it shall be designed to satisfy following:
    – For $N_a / N_{al} \leq 0.2$, the full allowable load in shear is permitted.
    – For $V_a / V_{al} \leq 0.2$, the full allowable load in tension is permitted.
    – For all other cases: $N_a / N_{al} + V_a / V_{al} \leq 1.2$.
    where:
    $N_a$ = Applied ASD tension load
    $N_{al}$ = Allowable tension load from Table 2A or 2B
    $V_a$ = Applied ASD shear load
    $V_{al}$ = Allowable shear load from Table 2A or 2B.

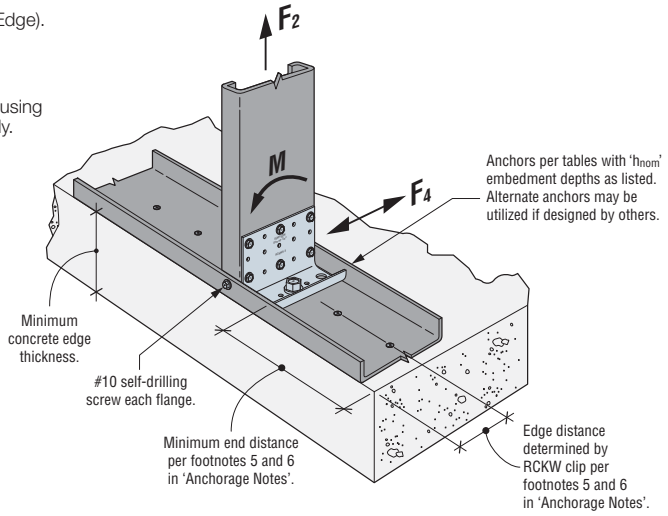


C-CF-2020 ©2020 SIMPSON STRONG-TIE COMPANY INC.

# **RCKW** Kneewall Connectors





## Table 3: RCKW Allowable Loads — Steel Applications with Anchorage

| Model No. | Framing Member Depth (in.) | Fastener to Structural Steel[2] | Fastener to Stud[3] | Framing Member Thickness mil (ga.) | Allowable Moment[4,5] M (in.-lb.) | Assembly Rotational Stiffness[6,8] β (in.-lb./rad) | Connector Rotational Stiffness[7,8] $\beta_C$ (in.-lb./rad) | Allowable Tension Load $F_2$ (lb.) | Allowable Shear Load $F_4$ (lb.) | Code Ref. |
|---|---|---|---|---|---|---|---|---|---|---|
| RCKW3 | 3.625 | (2) #12 | (4) #12 | 33 (20) | 2,105 | 55,500 | 58,000 | 850 | 455 | — |
| | | | | 43 (18) | 2,570 | 73,300 | 76,700 | 1,225 | 745 | |
| | | | | 54 (16) | 2,690 | 87,260 | 91,200 | 1,115 | 1,115 | |
| RCKW5.5 | 6.00 | (4) #12 | (6) #12 | 33 (20) | 5,165 | 199,200 | 209,200 | 1,245 | 650 | |
| | | | | 43 (18) | 6,370 | 272,600 | 287,100 | 1,900 | 1,060 | |
| | | | | 54 (16) | 6,430 | 255,900 | 266,100 | 2,000 | 1,295 | |
| RCKW7.5 | 8.00 | (6) #12 | (6) #12 | 33 (20) | 7,030 | 456,700 | 483,200 | 965 | 655 | |
| | | | | 43 (18) | 9,595 | 571,600 | 603,600 | 1,950 | 1,135 | |
| | | | | 54 (16) | 11,320 | 693,600 | 731,600 | 2,185 | 1,710 | |

1. For additional important information, see General Information and Notes on p. 22.
2. Designer is responsible for structural steel design.
3. See illustrations for fastener patterns.
4. Tabulated values are based on framing members with track and stud of the same thickness and #10 screws into each stud flange.
5. Tabulated moment values correspond to the maximum connector strength without consideration of serviceability. Designer must check out-of-plane deflections using tabulated Rotational Stiffness.
6. Tabulated Assembly Rotational Stiffness is for walls at 38" tall.
7. The tabulated Connector Rotational Stiffness is for any wall heights. The designer must consider member deflection due to bending in the stud.
8. Per IBC 2015 Table 1604.3 footnote f, wind load is permitted to be taken as 0.42 times "component and cladding loads" for deflection checks. For IBC 2009 and earlier, the factor is 0.7 instead of 0.42.

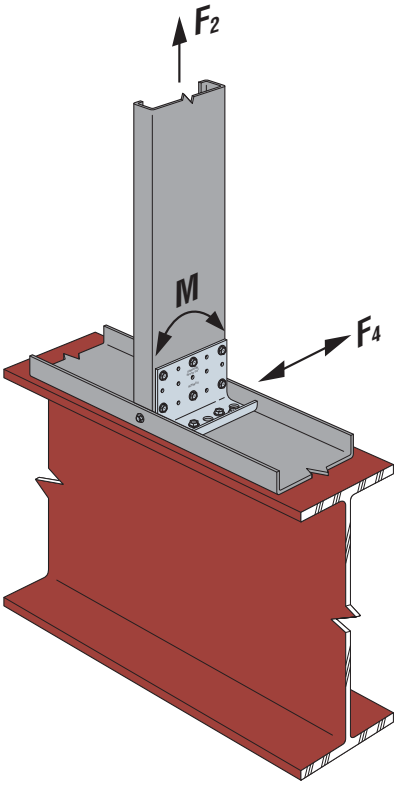


**RCKW5.5 Installation on Structural Steel**
*(RCKW3 and RCKW7.5 similar)*

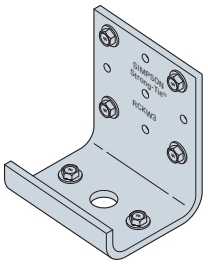

**RCKW3 Screw Pattern for Steel Anchorage**

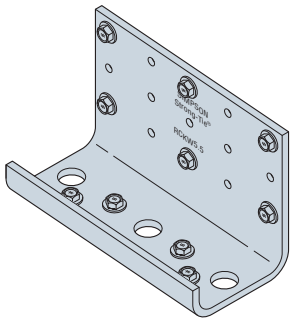

**RCKW5.5 Screw Pattern for Steel Anchorage**

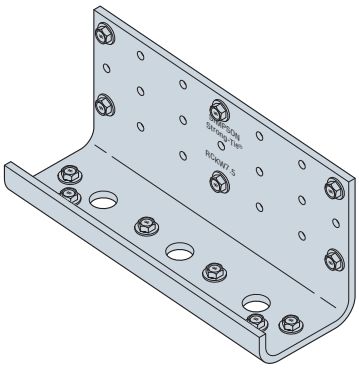

**RCKW7.5 Screw Pattern for Steel Anchorage**

C-CF-2020 ©2020 SIMPSON STRONG-TIE COMPANY INC.

# **RCKW** Kneewall Connectors



## Table 4: RCKW Allowable Loads — Steel Applications with Bolted or Welded Anchorage

| Model No. | Fastener Pattern No. | Anchor Bolt Diameter or Weld to Structural Steel | Fasteners to Stud | Framing Members Thickness mil (ga.) | Allowable Moment M (in.-lb.) | Assembly Rotational Stiffness[6,8] β (in.-kip/rad.) | Connector Rotational Stiffness[7,8] $\beta_c$ (in.-kip/rad.) | Allowable Tension Load $F_2$ (lb.) | Allowable Shear Load $F_4$ (lb.) |
|---|---|---|---|---|---|---|---|---|---|
| RCKW3 | 1 | (1) ½" or (4) 1" weld | (4) #12 | 33 (20) | 2,425 | 87 | 93 | 860 | 620 |
| | | | | 43 (18) | 3,080 | 113 | 115 | 1,340 | 755 |
| | | | | 54 (16) | 4,330 | 128 | 137 | 1,850 | 1,120 |
| | | | | 68 (14) | 5,150 | 141 | 153 | 1,850 | 1,120 |
| RCKW3 and RCKW3S (stiffener) | 2 | (1) ½" | (9) #12 | 33 (20) | 3,335 | 164 | 175 | 1,310 | 620 |
| | | | | 43 (18) | 4,215 | 164 | 175 | 1,710 | 795 |
| | | | | 54 (16) | 5,160 | 164 | 175 | 2,220 | 1,120 |
| | | | | 68 (14) | 5,160 | 164 | 175 | 2,410 | 1,415 |
| RCKW5.5 | 3 | (1) ½" | (6) #12 | 33 (20) | 4,670 | 304 | 328 | 1,140 | 665 |
| | | | | 43 (18) | 6,245 | 320 | 338 | 1,440 | 1,035 |
| | | | | 54 (16) | 8,225 | 320 | 338 | 2,455 | 1,390 |
| | | | | 68 (14) | 9,375 | 417 | 438 | 2,455 | 1,390 |
| | 3B | (2) ½" or (4) 1½" weld | (6) #12 | 33 (20) | 4,670 | 304 | 328 | 1,140 | 665 |
| | | | | 43 (18) | 6,245 | 333 | 355 | 1,440 | 1,035 |
| | | | | 54 (16) | 9,995 | 593 | 651 | 2,455 | 1,390 |
| | | | | 68 (14) | 11,630 | 674 | 734 | 2,455 | 1,390 |
| RCKW5.5 and RCKW5.5S (stiffener) | 4 | (1) ½" | (10) #12 | 33 (20) | 4,855 | 256 | 272 | 1,660 | 665 |
| | | | | 43 (18) | 8,445 | 450 | 490 | 2,165 | 1,035 |
| | | | | 54 (16) | 11,575 | 467 | 502 | 2,980 | 1,390 |
| | | | | 68 (14) | 14,040 | 511 | 513 | 2,980 | 1,830 |
| | 4B | (2) ½" | (10) #12 | 33 (20) | 4,855 | 256 | 272 | 1,660 | 665 |
| | | | | 43 (18) | 8,445 | 450 | 490 | 2,165 | 1,035 |
| | | | | 54 (16) | 13,455 | 669 | 742 | 2,980 | 1,390 |
| | | | | 68 (14) | 16,515 | 867 | 966 | 2,980 | 1,830 |
| RCKW7.5 | 5 | (1) ½" | (6) #12 | 33 (20) | 6,445 | 389 | 402 | 1,095 | 795 |
| | | | | 43 (18) | 8,200 | 510 | 536 | 1,280 | 1,200 |
| | | | | 54 (16) | 11,400 | 554 | 571 | 2,165 | 1,695 |
| | | | | 68 (14) | 13,895 | 605 | 628 | 2,165 | 1,695 |
| | 5B | (2) ½" or (4) 1½" weld | (6) #12 | 33 (20) | 6,445 | 389 | 402 | 1,095 | 795 |
| | | | | 43 (18) | 8,200 | 510 | 536 | 1,280 | 1,200 |
| | | | | 54 (16) | 13,255 | 867 | 927 | 2,165 | 1,695 |
| | | | | 68 (14) | 15,640 | 912 | 965 | 2,165 | 1,695 |
| RCKW7.5 and RCKW5.5S (stiffener) | 6 | (1) ½" | (10) #12 | 33 (20) | 8,705 | 495 | 517 | 1,730 | 795 |
| | | | | 43 (18) | 10,915 | 591 | 623 | 2,255 | 1,200 |
| | | | | 54 (16) | 14,045 | 689 | 720 | 2,625 | 1,695 |
| | | | | 68 (14) | 16,670 | 689 | 720 | 2,665 | 2,065 |
| | 6B | (2) ½" | (10) #12 | 33 (20) | 8,705 | 495 | 517 | 1,730 | 795 |
| | | | | 43 (18) | 10,915 | 591 | 623 | 2,255 | 1,200 |
| | | | | 54 (16) | 19,940 | 923 | 991 | 2,625 | 1,695 |
| | | | | 68 (14) | 22,555 | 1,040 | 1,107 | 2,665 | 2,065 |

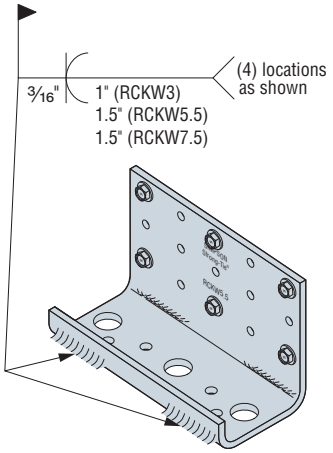


1. For additional important information, see General Information and Notes on p. 22.
2. Designer is responsible for structural steel design.
3. See illustrations on p. 105 for stud fastener patterns. For weld pattern to steel beam, see illustration above.
4. Tabulated values are based on framing members with top track and stud of the same thickness and #10 screws into each stud flange.
5. Tabulated moment values correspond to the maximum connector strength without consideration of serviceability. Designer must check out-of-plane deflections using tabulated Rotational Stiffness.
6. Tabulated Assembly Rotational Stiffness is for wall at 38" tall.
7. The tabulated Connector Rotational Stiffness is for any wall heights. The designer must consider member deflection due to bending in the stud.
8. Per IBC 2015 Table 1604.3 footnote f, wind load is permitted to be taken as 0.42 times "component and cladding loads" for deflection checks. For IBC 2009 and earlier, the factor is 0.7 instead of 0.42.

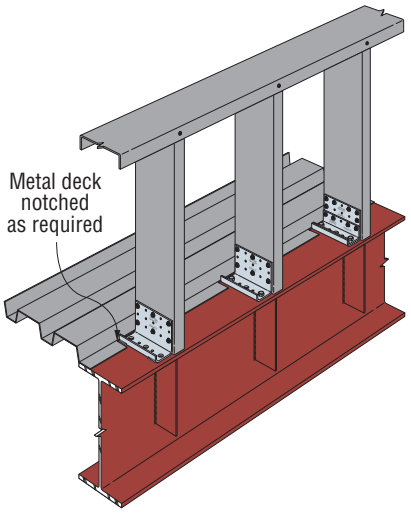


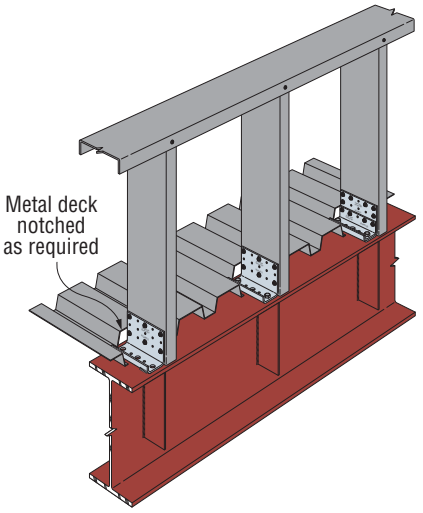


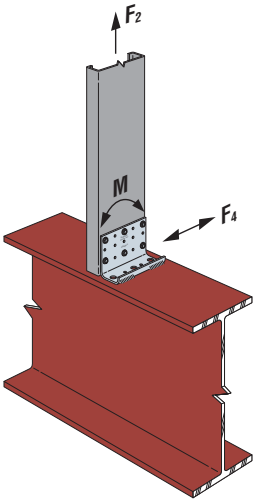


C-CF-2020 ©2020 SIMPSON STRONG-TIE COMPANY INC.

# MSSC4.25KW and MSSC6.25KW Kneewall Connectors



MSSC connectors are designed to work in tandem with Simpson Strong-Tie® BP½-3 bearing plates to provide solutions for moment-resisting kneewall lighter-duty applications.

**Features:**

- One simple custom hole pattern for each stud size simplifies specification and installation
- ⅜" diameter anchor bolt location enables easy tool access

**Material:** MSSC — 97 mil (50 ksi); BP — 229 mil (33 ksi)

**Finish:** MSSC — Galvanized (G90); BP — None

**Installation:**

- Use all specified fasteners/anchors
- Install BP½-3 bearing plate over anchor leg of MSSC connectors as shown in the illustrations

**Codes:** See p. 11 for Code Reference Key Chart

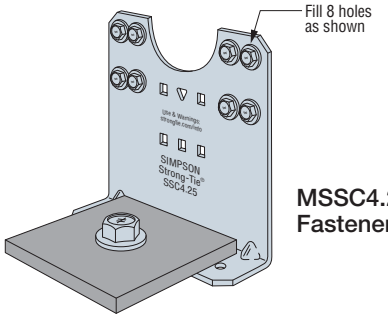


**MSSC4.25KW Fastener Pattern**

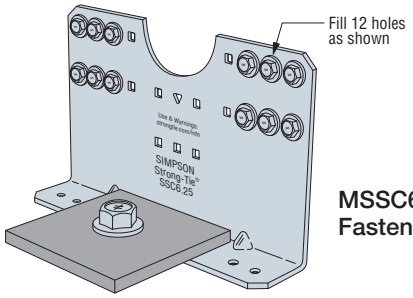


**MSSC6.25KW Fastener Pattern**

## Ordering Information

| Model No. | Ordering SKU | Package Quantity |
|---|---|---|
| MSSC4.25KW | MSSC4.25KW-KT20 | Box of 20 connectors and 20 BP bearing plates |
| MSSC6.25KW | MSSC6.25KW-KT20 | |

## Allowable Loads

| Model No. | Connector Material Thickness mil (ga.) | L (in.) | Framing Member Depth (in.) | Fasteners[5] | | Stud Thickness mil (ga.) | Allowable Moment, M (in.-lb.)[1] | Anchor Tension at Allowable Moment (lb.)[2] | Rotational Stiffness for Wind Deflection (in.-lb./rad.)[3,4] | Code Ref. |
|---|---|---|---|---|---|---|---|---|---|---|
| | | | | Anchor Diameter (in.) | Stud | | | | | |
| MSSC4.25KW | 97 (12) | 4¼ | 6 | ⅜ | (8) #10 | 33 (20) | 3,135 | 1,610 | 64,800 | IBC, LA |
| | | | | | | 43 (18) | 4,320 | 2,305[5] | | |
| | | | | | | 54 (16) | 5,830 | 3,300[5] | | |
| MSSC6.25KW | 97 (12) | 6¼ | 8 | ⅜ | (12) #10 | 33 (20) | 3,845 | 1,290 | 110,350 | |
| | | | | | | 43 (18) | 3,845 | 1,290 | | |
| | | | | | | 54 (16) | 8,350 | 2,980[5] | | |

1. Tabulated values correspond to maximum connector strength without consideration of serviceability. Designer must check out-of-plane deflections using tabulated rotational stiffness.
2. Uplift may be linearly interpolated for design moment less than allowable. Designer is responsible for anchorage design.
3. Tabulated stiffness is applicable for walls up to 38" tall. For taller walls, the designer must consider additional deflection due to bending in the studs.
4. Per IBC 2015 Table 1604.3 footnote f, wind load is permitted to be taken as 0.42 times "component and cladding loads" for deflection checks. For IBC 2009 and earlier, the factor is 0.7 instead of 0.42.
5. Tabulated allowable tension loads for the connectors with ⅜"-diameter anchor bolts require ASTM F3125 Grade A325 or ASTM A449 high-strength bolts. For A307 Grade A bolt, anchor tension load is limited to 2,200 lb.
6. See *Fastening Systems* catalog (C-F-2019) on **strongtie.com** for more information on Simpson Strong-Tie fasteners.

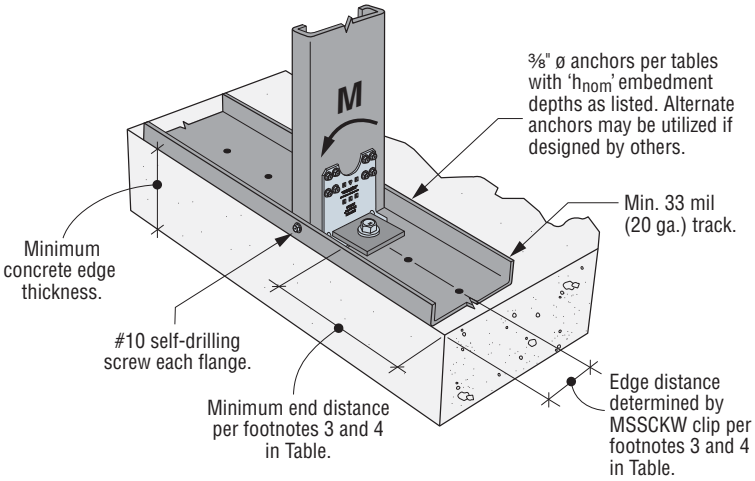


**Typical MSSCKW Installation**

C-CF-2020 ©2020 SIMPSON STRONG-TIE COMPANY INC.

# MSSC4.25KW and MSSC6.25KW Kneewall Connectors

SIMPSON Strong-Tie®



## Kneewall Connector Anchorage Solutions

**Uncracked Concrete, Wind and Seismic in SDC A&B[8,10]**

| Model No. | Minimum Concrete Thickness ($h_{min}$) | ⅜"-Diameter Simpson Strong-Tie® Anchor Type | Nominal Embedment Depth ($h_{nom}$) (in.) | Allowable Moment, M (in.-lb.) | | | | | |
|---|---|---|---|---|---|---|---|---|---|
| | | | | Edge of Slab[3] | | | Center of Slab[4] | | |
| | | | | 3,000 psi SLWC | 3,000 psi NWC | 4,000 psi NWC | 3,000 psi SLWC | 3,000 psi NWC | 4,000 psi NWC |
| MSSC4.25KW | 4" or thicker | STB2 | 2¼ | — | — | — | 1,220 | 2,040 | 2,365 |
| | | Titen HD® | 2½ | 1,255 | 2,090 | 2,425 | 1,255 | 2,090 | 2,425 |
| | 6" or thicker | STB2 | 2⅞ | — | — | — | 1,555 | 2,590 | 2,995 |
| | | Titen HD | 3¼ | 1,795 | 2,995 | 3,450 | 2,075 | 3,465 | 3,995 |
| | | SET-XP® | 4 | 725 | 1,425 | 1,425 | 1,930 | 3,705 | 3,705 |
| | | AT-XP® | 4 | 750 | 1,470 | 1,470 | 2,005 | 3,705 | 3,705 |
| | Concrete thickness ≥ 9.5" | SET-XP | 7½ | 670 | 1,320 | 1,320 | 3,610 | 3,705 | 3,705 |
| | | AT-XP | 7½ | 695 | 1,360 | 1,360 | 3,690 | 3,705 | 3,705 |
| MSSC6.25KW | 4" or thicker | STB2 | 2¼ | — | — | — | 1,515 | 2,530 | 2,930 |
| | | Titen HD | 2½ | 1,555 | 2,590 | 3,005 | 1,555 | 2,590 | 3,005 |
| | 6" or thicker | STB2 | 2⅞ | — | — | — | 1,930 | 3,215 | 3,715 |
| | | Titen HD | 3¼ | 2,570 | 4,295 | 4,950 | 2,570 | 4,295 | 4,950 |
| | | SET-XP | 4 | 1,110 | 2,170 | 2,170 | 2,395 | 4,595 | 4,595 |
| | | AT-XP | 4 | 1,135 | 2,235 | 2,235 | 2,480 | 4,595 | 4,595 |
| | Concrete thickness ≥ 9.5" | SET-XP | 7½ | 1,030 | 2,015 | 2,015 | 4,480 | 4,595 | 4,595 |
| | | AT-XP | 7½ | 1,055 | 2,065 | 2,065 | 4,575 | 4,595 | 4,595 |

**Cracked Concrete, Wind and Seismic in SDC A&B[8,10]**

| Model No. | Minimum Concrete Thickness ($h_{min}$) | ⅜"-Diameter Simpson Strong-Tie Anchor Type | Nominal Embedment Depth ($h_{nom}$) (in.) | Allowable Moment, M (in.-lb.) | | | | | |
|---|---|---|---|---|---|---|---|---|---|
| | | | | Edge of Slab[3] | | | Center of Slab[4] | | |
| | | | | 3,000 psi SLWC | 3,000 psi NWC | 4,000 psi NWC | 3,000 psi SLWC | 3,000 psi NWC | 4,000 psi NWC |
| MSSC4.25KW | 4" or thicker | STB2 | 2¼ | — | — | — | 860 | 1,435 | 1,660 |
| | | Titen HD | 2½ | 575 | 955 | 1,100 | 575 | 955 | 1,100 |
| | 6" or thicker | STB2 | 2⅞ | — | — | — | 1,295 | 2,150 | 2,495 |
| | | Titen HD | 3¼ | 1,255 | 2,095 | 2,430 | 1,255 | 2,095 | 2,430 |
| | | SET-XP | 4 | 1,175 | 2,305 | 2,305 | 1,485 | 2,915 | 2,915 |
| | | AT-XP | 4 | 1,220 | 2,395 | 2,395 | 1,560 | 3,065 | 3,065 |
| | Concrete thickness ≥ 9.5" | SET-XP | 7½ | 2,200 | 3,705 | 3,705 | 2,790 | 3,705 | 3,705 |
| | | AT-XP | 7½ | 2,290 | 3,705 | 3,705 | 2,935 | 3,705 | 3,705 |
| MSSC6.25KW | 4" or thicker | STB2 | 2¼ | — | — | — | 1,070 | 1,780 | 2,055 |
| | | Titen HD | 2½ | 715 | 1,185 | 1,365 | 715 | 1,185 | 1,365 |
| | 6" or thicker | STB2 | 2⅞ | — | — | — | 1,605 | 2,665 | 3,090 |
| | | Titen HD | 3¼ | 1,555 | 2,600 | 3,010 | 1,555 | 2,600 | 3,010 |
| | | SET-XP | 4 | 1,795 | 3,505 | 3,505 | 1,840 | 3,615 | 3,615 |
| | | AT-XP | 4 | 1,860 | 3,645 | 3,645 | 1,935 | 3,800 | 3,800 |
| | Concrete thickness ≥ 9.5" | SET-XP | 7½ | 3,350 | 4,595 | 4,595 | 3,455 | 4,595 | 4,595 |
| | | AT-XP | 7½ | 3,490 | 4,595 | 4,595 | 3,640 | 4,595 | 4,595 |

**Cracked Concrete, Seismic in SDC C through F[9,10]**

| Model No. | Minimum Concrete Thickness ($h_{min}$) | ⅜"-Diameter Simpson Strong-Tie Anchor Type | Nominal Embedment Depth ($h_{nom}$) (in.) | Allowable Moment, M (in.-lb.) | | | | | |
|---|---|---|---|---|---|---|---|---|---|
| | | | | Edge of Slab[3] | | | Center of Slab[4] | | |
| | | | | 3,000 psi SLWC | 3,000 psi NWC | 4,000 psi NWC | 3,000 psi SLWC | 3,000 psi NWC | 4,000 psi NWC |
| MSSC4.25KW | 4" or thicker | STB2 | 2¼ | — | — | — | 300 | 500 | 580 |
| | | Titen HD | 2½ | 200 | 335 | 385 | 200 | 335 | 385 |
| | 6" or thicker | STB2 | 2⅞ | — | — | — | 450 | 755 | 870 |
| | | Titen HD | 3¼ | 440 | 735 | 850 | 440 | 735 | 850 |
| | | SET-XP | 4 | 410 | 805 | 805 | 520 | 1,020 | 1,020 |
| | | AT-XP | 4 | 430 | 840 | 840 | 550 | 1,070 | 1,070 |
| | Concrete thickness ≥ 9.5" | SET-XP | 7½ | 770 | 1,495 | 1,495 | 975 | 4,325 | 4,325 |
| | | AT-XP | 7½ | 800 | 1,575 | 1,575 | 1,025 | 4,325 | 4,325 |
| MSSC6.25KW | 4" or thicker | STB2 | 2¼ | — | — | — | 375 | 620 | 720 |
| | | Titen HD | 2½ | 250 | 415 | 480 | 250 | 415 | 480 |
| | 6" or thicker | STB2 | 2⅞ | — | — | — | 560 | 935 | 1,080 |
| | | Titen HD | 3¼ | 545 | 910 | 1,050 | 545 | 910 | 1,050 |
| | | SET-XP | 4 | 625 | 1,225 | 1,225 | 645 | 1,265 | 1,265 |
| | | AT-XP | 4 | 650 | 1,275 | 1,275 | 680 | 1,330 | 1,330 |
| | Concrete thickness ≥ 9.5" | SET-XP | 7½ | 1,180 | 5,360 | 5,360 | 1,210 | 5,360 | 5,360 |
| | | AT-XP | 7½ | 1,220 | 5,310 | 5,310 | 1,270 | 5,310 | 5,310 |

1. Allowable Moments have been determined using ACI 318-14 Chapter 17 anchorage calculations with the minimum concrete compressive strength, $f'_c$ and slab thickness listed. Sand-Lightweight Concrete is abbreviated as 'SLWC', Normal Weight Concrete is abbreviated as 'NWC'.
2. Nominal Embedment Depth/Effective Embedment Depth relationships:
   - ⅜" Titen HD® in 4" concrete: 2.50" ($h_{nom}$) / 1.77" ($h_{ef}$)
   - ⅜" Titen HD in 6" concrete: 3.25" ($h_{nom}$) / 2.40" ($h_{ef}$)
   - ⅜" Carbon Steel STB2 into 4" concrete: 2.25"($h_{nom}$)/1.875"($h_{ef}$)
   - ⅜" Carbon Steel STB2 into 6" concrete: 2.875"($h_{nom}$)/2.5"($h_{ef}$)
   - SET-XP® or AT-XP® Adhesive with ⅜" F1554 Gr. 36 All-Thread Rod in 6" concrete: 4.0" ($h_{nom}$) = 4" ($h_{ef}$)
   - SET-XP or AT-XP Adhesive with ⅜" F1554 Gr. 36 All-Thread Rod in 9.5" concrete: 7.5" ($h_{nom}$) = 7.5" ($h_{ef}$)
3. At edge of slab, edge distances are assumed to be 3.0" and 4.0" (½ of stud width) as determined for 6" and 8" studs, respectively. 'End distances' are assumed as 1.5 x Min. Edge Distance in one direction and 'N/A' in the other direction. See figure on p. 115.
4. At center of slab, edge and end distances are assumed as 'N/A' in all directions at locations away from edge of slab. See figure on p. 115.
5. Load values are for a single anchor based on ACI 318-14, condition B, load factors from ACI 318-14 Section 5.3, no supplemental edge reinforcement, $\Psi_{c,V}$ = 1.0 for cracked concrete and periodic special inspection. Reference ICC-ES or IAPMO-UES evaluation reports for further information.
6. Load values are based on a short-term temperature range of 150°F and 180°F for SET-XP and AT-XP. Long-term temperature range is assumed to be 110°F for both SET-XP and AT-XP. Dry hole conditions are assumed.Other conditions may be evaluated using Anchor Designer™ Software for ACI 318, ETAG and CSA. See **strongtie.com/software.**
7. Allowable Stress Design (ASD) values were determined by multiplying calculated LRFD capacities by a conversion factor, Alpha ($\alpha$), of 0.7 for seismic loads and 0.6 for wind loads. ASD values for other load combinations may be determined using alternate conversion factors.
8. Tabulated allowable ASD loads for Wind and Seismic in SDC A&B are based on using wind conversion factors and may be increased by 1.17 for SDC A&B only.
9. Allowable loads have been divided by an Omega ($\Omega$) seismic factor of 2.5 for brittle failure as required by ACI 318-14 Chapter 17, unless steel failure governs.
10. Tabulated allowable moments are for MSSC Kneewall Connectors attached to studs with 33 (20) or 43 (18) mil (ga.) thickness. Allowable moment may be increased for MSSC Kneewall Connectors attached to studs with 54 (16) mil (ga.) thickness by multiplying by a factor of 1.16 for MSSC4.25KW and 1.28 for MSSC6.25KW.
11. Tabulated capacities assume lateral force applied at height of 38" above concrete. Tabulated capacities are based on maximum allowable anchorage loads only. The capacity of the connection system shall be the minimum of the tabulated value and the allowable load value from the MSSCKW Connectors: Allowable Load Tables.

C-CF-2020 ©2020 SIMPSON STRONG-TIE COMPANY INC.

# **Special Order** Custom Clips and Connectors

Simpson Strong-Tie can make a variety of flat and bent steel clips and connectors for cold-formed steel framing. Most custom clips can be punched with different holes and slots.

**Material:** 229 mil (3 ga.) maximum, 33 mil (20 ga.) minimum mill-certified steel (carbon and type 316L stainless steel)

**Finish:** Galvanized, Simpson Strong-Tie® gray paint. Contact Simpson Strong-Tie for availability.

## To Obtain Quote:

- Supply a CAD drawing in .dwg or .dxf format complete with all dimensions, hole diameter and centerline locations, bend angles, steel strength (min. $F_y$ and $F_u$), thickness (mil and/or ga.) and finish: (galvanized to G90, G185) or Simpson Strong-Tie gray paint (specify)
- Total shape and size up to a maximum of 48" x 48" (approx. 1⁄16" tolerance)
- Simpson Strong-Tie does not provide product engineering or load values for special-order custom clips and connectors
- Contact Simpson Strong-Tie for pricing information
- For additional information, please refer to Important Information and General Notes on pp.12–15 and 22.

## Specification Example:

**Quantity:** XX pieces

**Dimensions:** Per the attached CAD drawing (.dwg or .dxf format)

Drawing must be fully dimensioned, including:

- Overall dimensions
- Leg dimensions
- Bend angles (if required)
- Hole/slot sizes and centerlines (if required)

**Material Specification:** Contact Simpson Strong-Tie for availability

**Thickness:** 54 mil (16 ga.)

**Strength:** Min. Yield Strength ($F_y$) = 33 ksi, Min. Tensile Strength ($F_u$) = 45 ksi

**Finish:** Galvanized (G90)

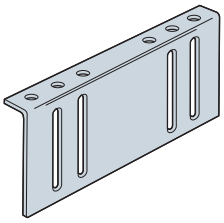

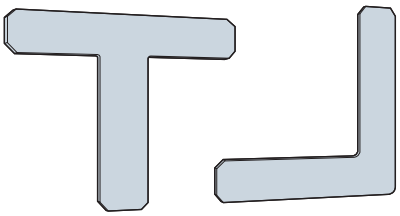

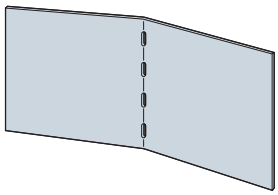

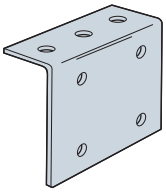

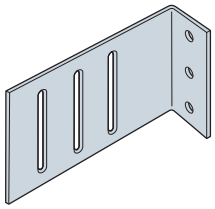

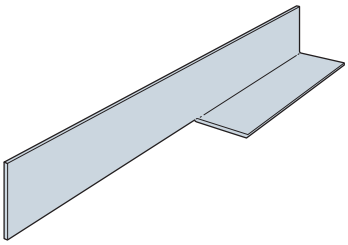

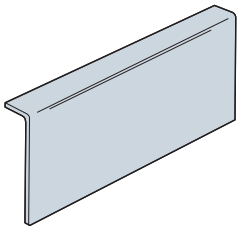

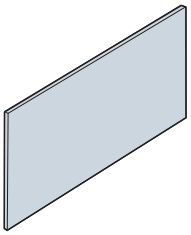

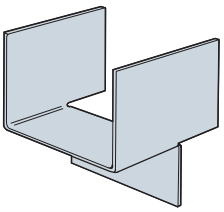

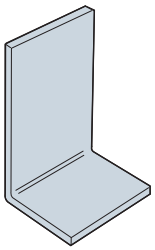

C-CF-2020 ©2020 SIMPSON STRONG-TIE COMPANY INC.

# Bridging and Bracing Connectors

# Simplified Design and Installation Through Innovation

Simpson Strong-Tie® SUBH and MSUBH wall stud bridging connectors for cold-formed steel (CFS) framing offer a compact profile that allows standard 1⅝" studs to be sistered directly against adjacent studs. The LSUBH connector provides the same installation benefits of the SUBH/MSUBH connectors, and is suitable for many wind- and load-bearing situations where the load demand is light to moderate. Many applications require only one screw, greatly reducing labor costs and increasing productivity.

VALUE ENGINEERED

***This product is preferable to similar connectors because of a) easier installation, b) higher loads, c) lower installed cost, or a combination of these features.***

**Features:**

- Tested to include stud-web strength and stiffness in the tabulated design values
- Design values ensure compliance with AISI S100 Sections D3.2.1 and D3.3 for axially and laterally loaded studs
- Flexible design solutions for web thicknesses of 33 mil (20 ga.) through 97 mil (12 ga.) and stud sizes from 3⅝" to 8"
- SUBH and LSUBH accommodates single studs 33 mil (20 ga.) to 54 mil (16 ga.)
- MSUBH accommodates single studs 54 mil (16 ga.) to 97 mil (12 ga.) and back-to-back built-up members ranging from 33 mil (20 ga.) to 54 mil (16 ga.)

**Material:** LSUBH3.25 — 33 mil (20 ga.); SUBH3.25 — 43 mil (18 ga.); MSUBH3.25 — 68 mil (14 ga.)

**Finish:** Galvanized (G90)

**Installation:**

- See pp. 120 through 122

**Codes:** See p. 11 for Code Reference Key Chart

**Ordering Information:**

LSUBH3.25 and SUBH3.25-R150 (Bucket of 150), MSUBH3.25-R100 (Bucket of 100)

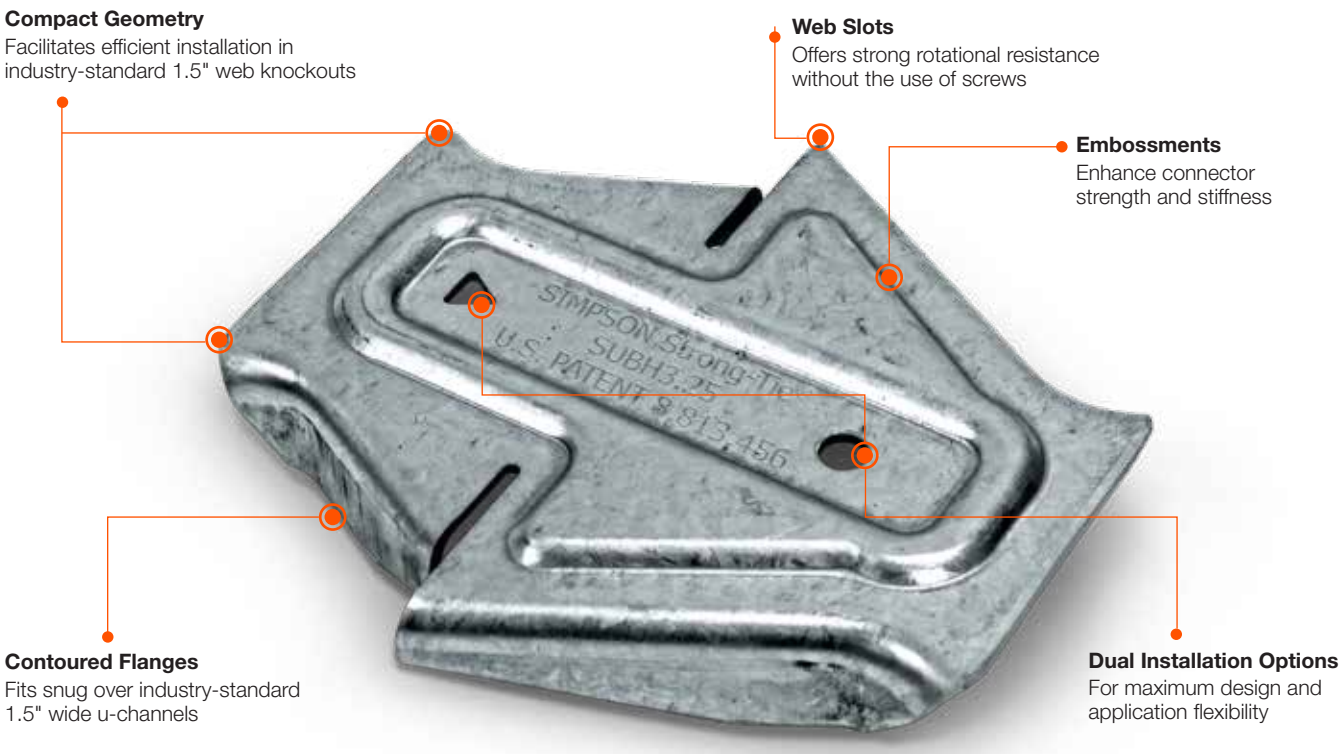


**Compact Geometry**
Facilitates efficient installation in industry-standard 1.5" web knockouts

**Web Slots**
Offers strong rotational resistance without the use of screws

**Embossments**
Enhance connector strength and stiffness

**Contoured Flanges**
Fits snug over industry-standard 1.5" wide u-channels

**Dual Installation Options**
For maximum design and application flexibility

**SUBH3.25**
*(LSUBH3.25 and MSUBH3.25 similar)*
US Patent 8,813,456

C-CF-2020 ©2020 SIMPSON STRONG-TIE COMPANY INC.

# Installation Instructions

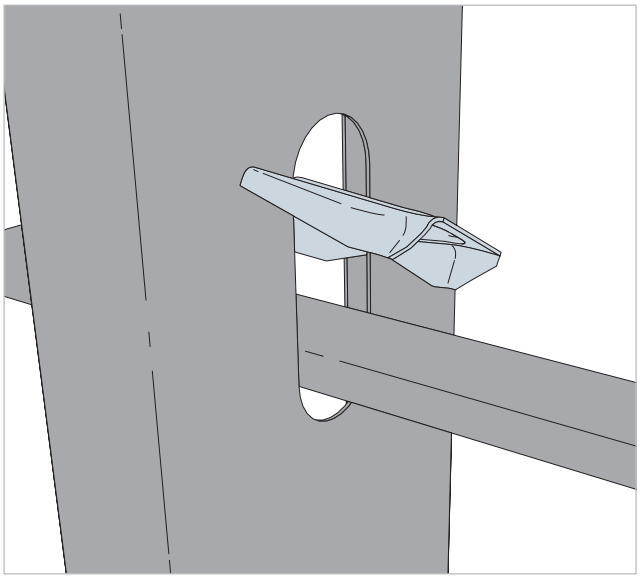

**Step 1:** With the u-channel in a stable, horizontal position, insert either end of the SUBH into the web knockout at approximately 45°.

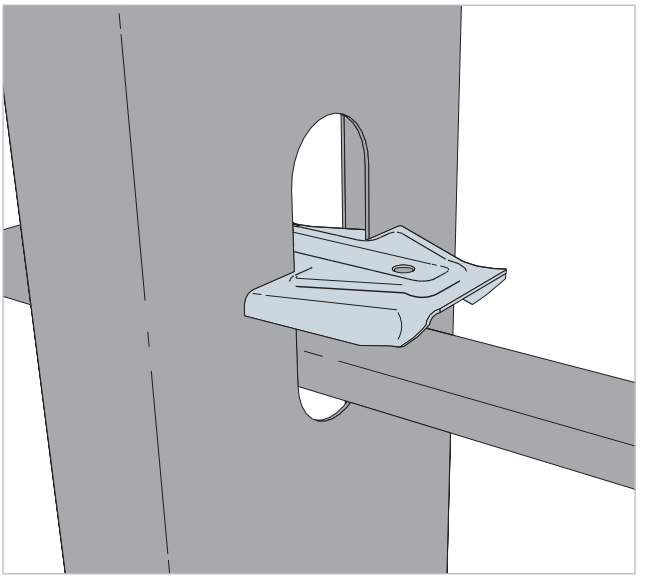

**Step 2:** Rotate the SUBH into a horizontal position aligned with the u-channel so the slots engage the stud web.

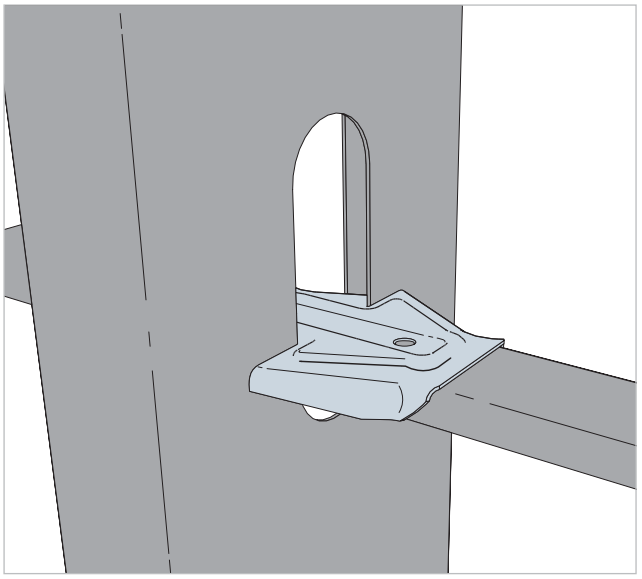

**Step 3:** Slide the SUBH down over the u-channel flanges, ensuring that the connector and u-channel are fully seated. (**Note:** For installations at slip track, the connector may be installed inverted — see p. 121.)

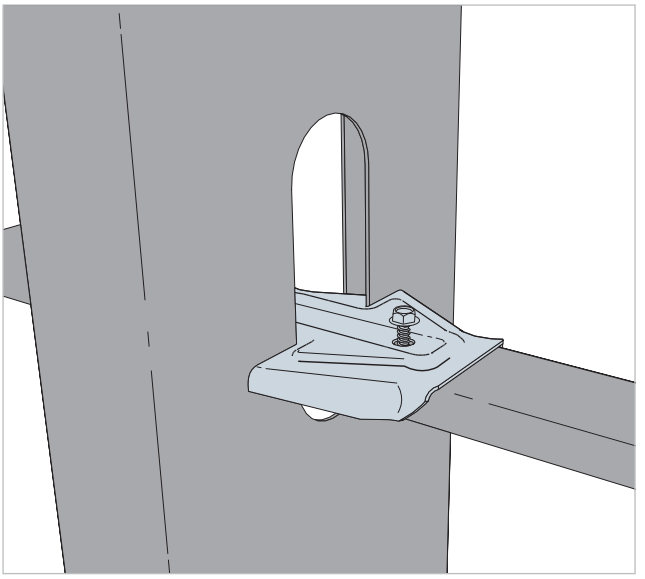

**Step 4:** Install the specified type and number of screws through the holes of the SUBH into the u-channel.

C-CF-2020 © 2020 SIMPSON STRONG-TIE COMPANY INC.

# Installation Details

## Typical Orientations

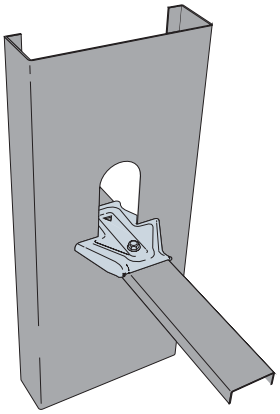

1

Round Hole Near Side

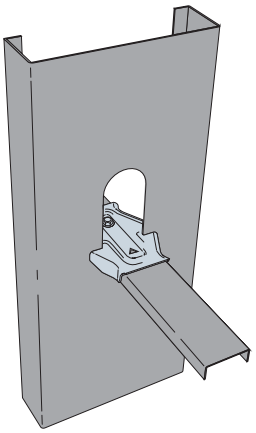

2

Round Hole Far Side

## Recommended Details at Built-Up Studs

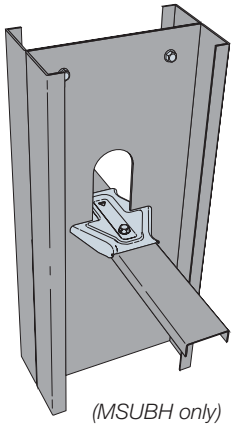

1

*(MSUBH only)*

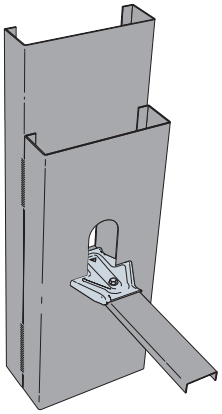

3

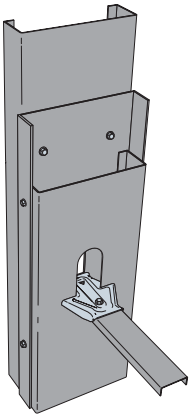

2

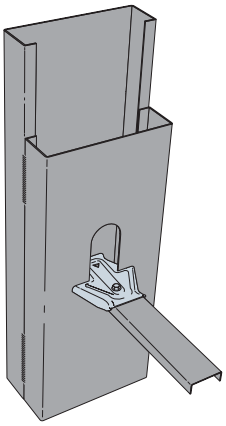

4

## Recommended Detail at Slip Track

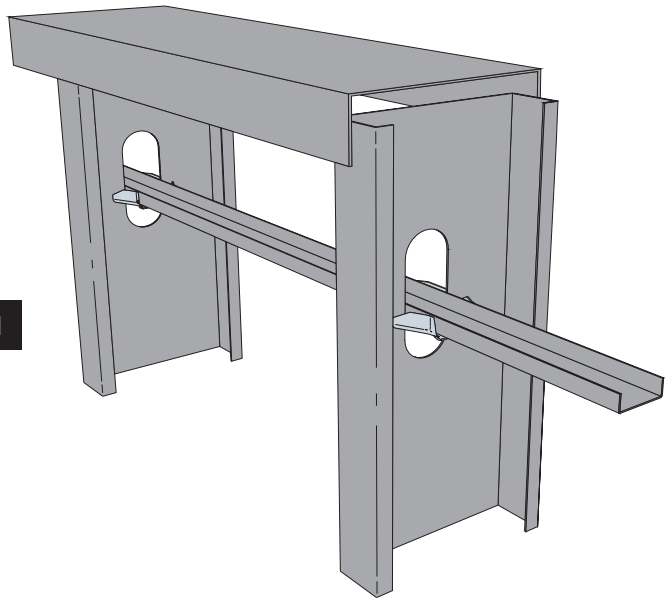

1

C-CF-2020 ©2020 SIMPSON STRONG-TIE COMPANY INC.

# Alternate and Optional U-Channel Bridging Installation Details

**Recommended details where knockout access is restricted, or where additional u-channel restraint is needed for load path considerations.**

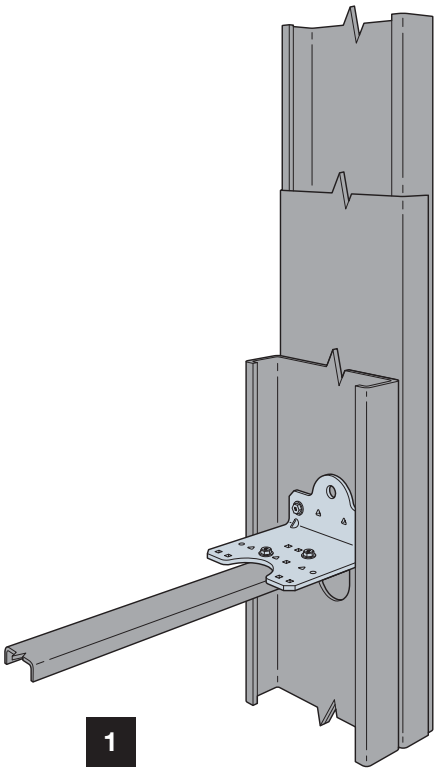

1

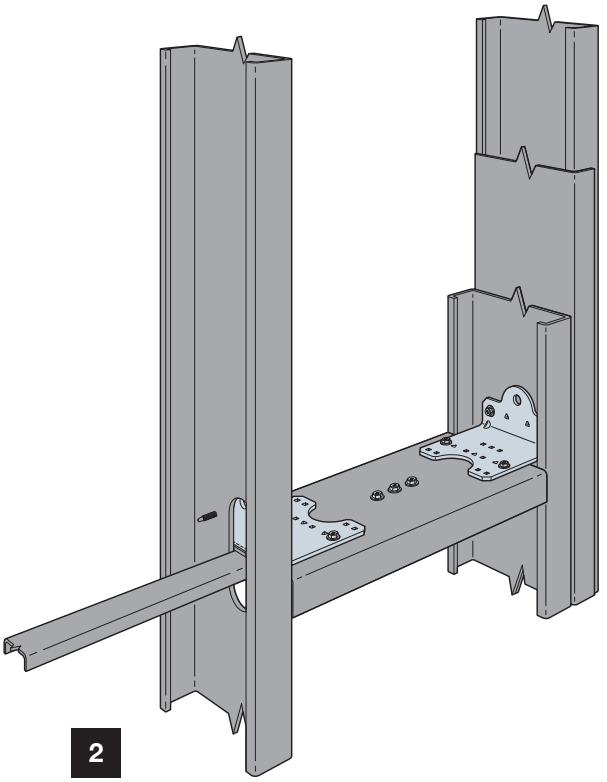

2

C-CF-2020 ©2020 SIMPSON STRONG-TIE COMPANY INC.

# How to Use Bridging Connector Allowable Load Table

The tabulated strength and stiffness values are for use with Sections D3.2.1 and D3.3 of the 2012 edition of AISI North American Specification for the Design of Cold-Formed Steel Structural Members (AISI S100-2012) as follows:

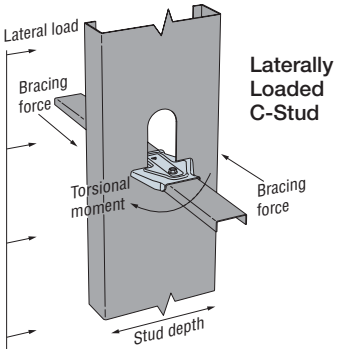


### Bracing Design for Laterally Loaded C-Studs

Step 1: Calculate required bracing force for each flange using equation D3.2.1-3

Step 2: Multiply result by stud depth to obtain torsional moment

Step 3: Select connector with tabulated allowable torsional moment that exceeds torsional moment from Step 2 for the stud depth and gauge required

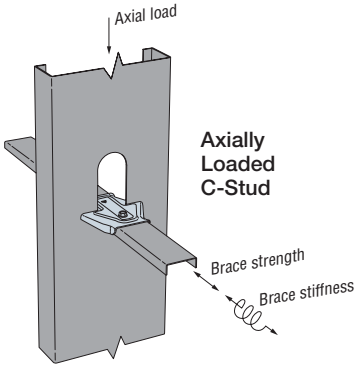


### Bracing Design for Axially Loaded C-Studs

Step 1: Calculate required brace strength using equation D3.3-1

Step 2: Calculate required brace stiffness using equation D3.3-2a

Step 3: Select connector with tabulated allowable brace strength that exceeds strength from Step 1 and tabulated brace stiffness that exceeds stiffness from Step 2 for the stud depth and gauge required

## SUBH Bridge Clip Connector — Strength and Stiffness

| Model No. | Stud Depth (in.) | Stud Thickness mils (ga.) | Laterally Loaded C-Stud: Allowable Torsional Moment[1] (in.-lb.) | | Axially Loaded C-Stud: Allowable Brace Strength[1,2] (lb.) | | Axially Loaded C-Stud: Brace Stiffness[3] (lb./in.) | | Code Ref. |
|---|---|---|---|---|---|---|---|---|---|
| | | | Min. | Max. | Min. | Max. | Min. | Max. | |
| LSUBH3.25 | 3.625 | 33 (20) | 215 | 330 | 155 | 275 | 2,300 | 2,685 | IBC, FL, LA |
| | | 43 (18) | 230 | 370 | 175 | 310 | 5,075 | 7,585 | |
| | | 54 (16) | 225 | 370 | 195 | 345 | 5,075 | 8,100 | |
| SUBH3.25 | | 33 (20) | 320 | 345 | 230 | 370 | 1,450 | 1,985 | |
| | | 43 (18) | 355 | 430 | 255 | 420 | 2,780 | 4,035 | |
| | | 54 (16) | 420 | 455 | 290 | 475 | 2,925 | 3,975 | |
| MSUBH3.25 | | 54 (16) | 550 | 800 | 435 | 630 | 3,440 | 4,015 | |
| | | 68 (14) | 640 | 860 | 485 | 695 | 4,040 | 6,145 | |
| | | 97 (12) | 670 | 860 | 515 | 770 | 6,860 | 14265 | |
| LSUBH3.25 | 6.00 | 33 (20) | 225 | 330 | 120 | 140 | 670 | 730 | |
| | | 43 (18) | 250 | 395 | 155 | 285 | 1,010 | 2,075 | |
| | | 54 (16) | 265 | 395 | 180 | 330 | 1,025 | 2,565 | |
| SUBH3.25 | | 33 (20) | 275 | 385 | 110 | 110 | 605 | 605 | |
| | | 43 (18) | 295 | 525 | 230 | 250 | 1,050 | 1,205 | |
| | | 54 (16) | 350 | 550 | 275 | 415 | 1,130 | 1,700 | |
| MSUBH3.25 | | 54 (16) | 565 | 895 | 385 | 430 | 1,630 | 1,695 | |
| | | 68 (14) | 655 | 925 | 455 | 620 | 1,860 | 2,655 | |
| | | 97 (12) | 690 | 960 | 505 | 765 | 4,070 | 4,090 | |
| LSUBH3.25 | 8.00 | 43 (18) | 235 | 375 | 135 | 135 | 815 | 815 | |
| | | 54 (16) | 250 | 375 | 180 | 260 | 1,130 | 1,130 | |
| SUBH3.25 | | 43 (18) | 255 | 570 | 190 | 190 | 505 | 535 | |
| | | 54 (16) | 325 | 605 | 250 | 300 | 895 | 1,025 | |
| MSUBH3.25 | | 54 (16) | 545 | 890 | 270 | 270 | 1,025 | 1,045 | |
| | | 68 (14) | 635 | 925 | 435 | 455 | 1,400 | 1,400 | |
| | | 97 (12) | 665 | 955 | 545 | 545 | 2,465 | 2,465 | |
| MSUBH | 10, 12 | 54 (16) | — | 820 | — | 200 | — | 510 | |

1. Allowable loads are for use when utilizing Allowable Stress Design methology. For LRFD loads multiply the ASD tabulated values by 1.6.
2. Allowable brace strengths are based on ultimate test load divided by a safety factor. Serviceability limit is not considered, as brace stiffness requirements are given in section D3.3 of AISI S100-2012. Contact Simpson Strong-Tie if nominal brace strength is required.
3. Tabulated stiffness values apply to both ASD and LRFD designs.
4. Allowable loads consider bridging connection only. It is responsibility of the designer to verify the strength and serviceability of the framing members.
5. Min. fastener quantity and tabulated values – fill round hole (one screw total); Max. fastener quantity and tabulated values – fill round and triangle holes (two screws total).

C-CF-2020 ©2020 SIMPSON STRONG-TIE COMPANY INC.

## LSUBH — Maximum Vertical Spacing for Rows of U-Channel Bridging (ft.)

| Stud Spacing (in.) | Stud Section | Stud Thickness mil (ga.) | Lateral Stud Pressure (psf) | | | | | | | | | | | | | | | | | | | |
|---|---|---|---|---|---|---|---|---|---|---|---|---|---|---|---|---|---|---|---|---|---|---|
| | | | 5 | | 10 | | 15 | | 20 | | 25 | | 30 | | 35 | | 40 | | 45 | | 50 | |
| | | | Min. | Max. | Min. | Max. | Min. | Max. | Min. | Max. | Min. | Max. | Min. | Max. | Min. | Max. | Min. | Max. | Min. | Max. | Min. | Max. |
| 16 | 362S162 | 33 (20) | 8 | 8 | 8 | 8 | 8 | 8 | 6 | 8 | 5 | 8 | 4 | 6 | — | 5 | — | 5 | — | 4 | — | 4 |
| | | 43 (18) | 8 | 8 | 8 | 8 | 8 | 8 | 7 | 8 | 5 | 8 | 4 | 7 | 4 | 6 | — | 5 | — | 5 | — | 4 |
| | | 54 (16) | 8 | 8 | 8 | 8 | 8 | 8 | 7 | 8 | 5 | 8 | 4 | 7 | 4 | 6 | — | 5 | — | 5 | — | 4 |
| | 362S200 | 33 (20) | 8 | 8 | 8 | 8 | 6 | 8 | 5 | 8 | 4 | 6 | — | 5 | — | 4 | — | 4 | — | — | — | — |
| | | 43 (18) | 8 | 8 | 8 | 8 | 7 | 8 | 5 | 8 | 4 | 7 | — | 6 | — | 5 | — | 4 | — | 4 | — | — |
| | | 54 (16) | 8 | 8 | 8 | 8 | 7 | 8 | 5 | 8 | 4 | 7 | — | 6 | — | 5 | — | 4 | — | 4 | — | — |
| | 362S250 | 43 (18) | 8 | 8 | 8 | 8 | 6 | 8 | 4 | 7 | — | 5 | — | 4 | — | 4 | — | — | — | — | — | — |
| | | 54 (16) | 8 | 8 | 8 | 8 | 5 | 8 | 4 | 7 | — | 5 | — | 4 | — | 4 | — | — | — | — | — | — |
| | 600S162 | 33 (20) | 8 | 8 | 8 | 8 | 8 | 8 | 8 | 8 | 6 | 8 | 5 | 8 | 4 | 6 | 4 | 6 | — | 5 | — | 4 |
| | | 43 (18) | 8 | 8 | 8 | 8 | 8 | 8 | 8 | 8 | 7 | 8 | 6 | 8 | 5 | 8 | 4 | 7 | 4 | 6 | — | 5 |
| | | 54 (16) | 8 | 8 | 8 | 8 | 8 | 8 | 8 | 8 | 7 | 8 | 6 | 8 | 5 | 8 | 4 | 7 | 4 | 6 | — | 5 |
| | 600S200 | 33 (20) | 8 | 8 | 8 | 8 | 8 | 8 | 6 | 8 | 4 | 7 | 4 | 6 | — | 5 | — | 4 | — | 4 | — | — |
| | | 43 (18) | 8 | 8 | 8 | 8 | 8 | 8 | 6 | 8 | 5 | 8 | 4 | 7 | — | 6 | — | 5 | — | 4 | — | 4 |
| | | 54 (16) | 8 | 8 | 8 | 8 | 8 | 8 | 7 | 8 | 5 | 8 | 4 | 7 | 4 | 6 | — | 5 | — | 4 | — | 4 |
| | 600S250 | 43 (18) | 8 | 8 | 8 | 8 | 7 | 8 | 5 | 8 | 4 | 6 | — | 5 | — | 4 | — | 4 | — | — | — | — |
| | | 54 (16) | 8 | 8 | 8 | 8 | 7 | 8 | 5 | 8 | 4 | 6 | — | 5 | — | 4 | — | 4 | — | — | — | — |
| | 800S162 | 43 (18) | 8 | 8 | 8 | 8 | 8 | 8 | 8 | 8 | 7 | 8 | 6 | 8 | 5 | 8 | 4 | 7 | 4 | 6 | — | 6 |
| | | 54 (16) | 8 | 8 | 8 | 8 | 8 | 8 | 8 | 8 | 8 | 8 | 7 | 8 | 6 | 8 | 5 | 7 | 4 | 7 | 4 | 6 |
| | 800S200 | 43 (18) | 8 | 8 | 8 | 8 | 8 | 8 | 7 | 8 | 5 | 8 | 4 | 7 | 4 | 6 | — | 5 | — | 5 | — | 4 |
| | | 54 (16) | 8 | 8 | 8 | 8 | 8 | 8 | 7 | 8 | 6 | 8 | 5 | 7 | 4 | 6 | — | 5 | — | 5 | — | 4 |
| | 800S250 | 43 (18) | 8 | 8 | 8 | 8 | 7 | 8 | 5 | 8 | 4 | 7 | — | 5 | — | 5 | — | 4 | — | — | — | — |
| | | 54 (16) | 8 | 8 | 8 | 8 | 8 | 8 | 6 | 8 | 4 | 7 | 4 | 6 | — | 5 | — | 4 | — | 4 | — | — |
| 24 | 362S162<br>362S162<br>362S162 | 33 (20) | 8 | 8 | 8 | 8 | 6 | 8 | 4 | 6 | — | 5 | — | 4 | — | — | — | — | — | — | — | — |
| | | 43 (18) | 8 | 8 | 8 | 8 | 6 | 8 | 4 | 7 | — | 6 | — | 5 | — | 4 | — | — | — | — | — | — |
| | | 54 (16) | 8 | 8 | 8 | 8 | 6 | 8 | 4 | 7 | — | 6 | — | 5 | — | 4 | — | — | — | — | — | — |
| | 362S200<br>362S200<br>362S200 | 33 (20) | 8 | 8 | 6 | 8 | 4 | 7 | — | 5 | — | 4 | — | — | — | — | — | — | — | — | — | — |
| | | 43 (18) | 8 | 8 | 7 | 8 | 4 | 8 | — | 6 | — | 4 | — | 4 | — | — | — | — | — | — | — | — |
| | | 54 (16) | 8 | 8 | 7 | 8 | 4 | 8 | — | 6 | — | 4 | — | 4 | — | — | — | — | — | — | — | — |
| | 362S250<br>362S250 | 43 (18) | 8 | 8 | 6 | 8 | 4 | 6 | — | 4 | — | — | — | — | — | — | — | — | — | — | — | — |
| | | 54 (16) | 8 | 8 | 5 | 8 | — | 6 | — | 4 | — | — | — | — | — | — | — | — | — | — | — | — |
| | 600S162<br>600S162<br>600S162 | 33 (20) | 8 | 8 | 8 | 8 | 7 | 8 | 5 | 8 | 4 | 6 | — | 5 | — | 4 | — | 4 | — | — | — | — |
| | | 43 (18) | 8 | 8 | 8 | 8 | 8 | 8 | 6 | 8 | 4 | 7 | 4 | 6 | — | 5 | — | 4 | — | 4 | — | — |
| | | 54 (16) | 8 | 8 | 8 | 8 | 8 | 8 | 6 | 8 | 5 | 7 | 4 | 6 | — | 5 | — | 4 | — | 4 | — | — |
| | 600S200<br>600S200<br>600S200 | 33 (20) | 8 | 8 | 8 | 8 | 5 | 8 | 4 | 6 | — | 4 | — | 4 | — | — | — | — | — | — | — | — |
| | | 43 (18) | 8 | 8 | 8 | 8 | 6 | 8 | 4 | 7 | — | 5 | — | 4 | — | 4 | — | — | — | — | — | — |
| | | 54 (16) | 8 | 8 | 8 | 8 | 6 | 8 | 4 | 7 | — | 5 | — | 4 | — | 4 | — | — | — | — | — | — |
| | 600S250<br>600S250 | 43 (18) | 8 | 8 | 7 | 8 | 4 | 7 | — | 5 | — | 4 | — | — | — | — | — | — | — | — | — | — |
| | | 54 (16) | 8 | 8 | 7 | 8 | 5 | 7 | — | 5 | — | 4 | — | — | — | — | — | — | — | — | — | — |
| | 800S162<br>800S162 | 43 (18) | 8 | 8 | 8 | 8 | 8 | 8 | 6 | 8 | 5 | 8 | 4 | 6 | — | 5 | — | 5 | — | 4 | — | 4 |
| | | 54 (16) | 8 | 8 | 8 | 8 | 8 | 8 | 7 | 8 | 5 | 8 | 4 | 7 | 4 | 6 | — | 5 | — | 4 | — | 4 |
| | 800S200<br>800S200 | 43 (18) | 8 | 8 | 8 | 8 | 6 | 8 | 4 | 7 | — | 6 | — | 5 | — | 4 | — | — | — | — | — | — |
| | | 54 (16) | 8 | 8 | 8 | 8 | 6 | 8 | 5 | 7 | 4 | 6 | — | 5 | — | 4 | — | — | — | — | — | — |
| | 800S250<br>800S250 | 43 (18) | 8 | 8 | 7 | 8 | 5 | 7 | — | 5 | — | 4 | — | — | — | — | — | — | — | — | — | — |
| | | 54 (16) | 8 | 8 | 8 | 8 | 5 | 8 | 4 | 6 | — | 4 | — | 4 | — | — | — | — | — | — | — | — |

1. See General Information and Notes on pp. 14–15 and 22.
2. Tabulated solutions are for ASD lateral pressure. Contact Simpson Strong-Tie for LRFD solutions.
3. Lateral pressure shall be determined based on load combinations of the applicable code. For designs in accordance with the 2009 IBC and earlier, wind pressures are at working stress level and may be used directly. For designs in accordance with the 2012 IBC and later, wind pressures are at strength level and must be multiplied by 0.6 for ASD load combinations.
4. "Min." designates a solution with the minimum number of fasteners ((1) #10 screw installed in round hole). "Max." designates a solution requiring the maximum number of fasteners ((2) #10 screws; fill both round and triangle holes). Blank areas designate conditions where the LSUBH does not offer a solution.

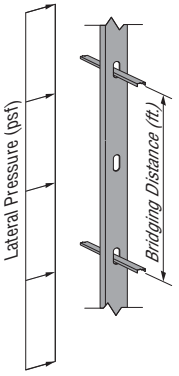


C-CF-2020 ©2020 SIMPSON STRONG-TIE COMPANY INC.

# **SUBH** Design Tables



## SUBH — Maximum Vertical Spacing for Rows of U-Channel Bridging (ft.)

| Stud Spacing (in.) | Stud Section | Stud Thickness mil (ga.) | Lateral Stud Pressure (psf) | | | | | | | | | | | | | | | | | | | |
|---|---|---|---|---|---|---|---|---|---|---|---|---|---|---|---|---|---|---|---|---|---|---|
| | | | 5 | | 10 | | 15 | | 20 | | 25 | | 30 | | 35 | | 40 | | 45 | | 50 | |
| | | | Min. | Max. | Min. | Max. | Min. | Max. | Min. | Max. | Min. | Max. | Min. | Max. | Min. | Max. | Min. | Max. | Min. | Max. | Min. | Max. |
| 16 | 362S162 | 33 (20) | 8 | 8 | 8 | 8 | 8 | 8 | 8 | 8 | 8 | 8 | 6 | 7 | 5 | 6 | 5 | 5 | 4 | 4 | 4 | 4 |
| | | 43 (18) | 8 | 8 | 8 | 8 | 8 | 8 | 8 | 8 | 8 | 8 | 7 | 8 | 6 | 7 | 5 | 6 | 5 | 6 | 4 | 5 |
| | | 54 (16) | 8 | 8 | 8 | 8 | 8 | 8 | 8 | 8 | 8 | 8 | 8 | 8 | 7 | 8 | 6 | 7 | 6 | 6 | 5 | 5 |
| | 362S200 | 33 (20) | 8 | 8 | 8 | 8 | 8 | 8 | 7 | 8 | 6 | 6 | 5 | 5 | 4 | 4 | — | 4 | — | — | — | — |
| | | 43 (18) | 8 | 8 | 8 | 8 | 8 | 8 | 8 | 8 | 6 | 8 | 5 | 6 | 4 | 5 | 4 | 5 | — | 4 | — | 4 |
| | | 54 (16) | 8 | 8 | 8 | 8 | 8 | 8 | 8 | 8 | 8 | 8 | 6 | 7 | 5 | 6 | 5 | 5 | 4 | 4 | 4 | 4 |
| | 362S250 | 43 (18) | 8 | 8 | 8 | 8 | 8 | 8 | 6 | 8 | 5 | 6 | 4 | 5 | — | 4 | — | 4 | — | — | — | — |
| | | 54 (16) | 8 | 8 | 8 | 8 | 8 | 8 | 8 | 8 | 6 | 7 | 5 | 5 | 4 | 5 | 4 | 4 | — | — | — | — |
| | 600S162 | 33 (20) | 8 | 8 | 8 | 8 | 8 | 8 | 8 | 8 | 8 | 8 | 6 | 8 | 5 | 8 | 5 | 7 | 4 | 6 | 4 | 5 |
| | | 43 (18) | 8 | 8 | 8 | 8 | 8 | 8 | 8 | 8 | 8 | 8 | 7 | 8 | 6 | 8 | 5 | 8 | 4 | 8 | 4 | 7 |
| | | 54 (16) | 8 | 8 | 8 | 8 | 8 | 8 | 8 | 8 | 8 | 8 | 8 | 8 | 7 | 8 | 6 | 8 | 5 | 8 | 5 | 8 |
| | 600S200 | 33 (20) | 8 | 8 | 8 | 8 | 8 | 8 | 7 | 8 | 6 | 8 | 5 | 7 | 4 | 6 | — | 5 | — | 4 | — | 4 |
| | | 43 (18) | 8 | 8 | 8 | 8 | 8 | 8 | 8 | 8 | 6 | 8 | 5 | 8 | 4 | 8 | 4 | 7 | — | 6 | — | 5 |
| | | 54 (16) | 8 | 8 | 8 | 8 | 8 | 8 | 8 | 8 | 7 | 8 | 6 | 8 | 5 | 8 | 4 | 7 | 4 | 6 | — | 6 |
| | 600S250 | 43 (18) | 8 | 8 | 8 | 8 | 8 | 8 | 6 | 8 | 5 | 8 | 4 | 7 | — | 6 | — | 5 | — | 5 | — | 4 |
| | | 54 (16) | 8 | 8 | 8 | 8 | 8 | 8 | 7 | 8 | 6 | 8 | 5 | 8 | 4 | 6 | — | 6 | — | 5 | — | 4 |
| | 800S162 | 43 (18) | 8 | 8 | 8 | 8 | 8 | 8 | 8 | 8 | 8 | 8 | 7 | 8 | 6 | 8 | 5 | 8 | 4 | 8 | 4 | 8 |
| | | 54 (16) | 8 | 8 | 8 | 8 | 8 | 8 | 8 | 8 | 8 | 8 | 8 | 8 | 7 | 8 | 6 | 8 | 6 | 8 | 5 | 8 |
| | 800S200 | 43 (18) | 8 | 8 | 8 | 8 | 8 | 8 | 7 | 8 | 6 | 8 | 5 | 8 | 4 | 8 | — | 8 | — | 7 | — | 7 |
| | | 54 (16) | 8 | 8 | 8 | 8 | 8 | 8 | 8 | 8 | 8 | 8 | 6 | 8 | 5 | 8 | 5 | 8 | 4 | 8 | 4 | 7 |
| | 800S250 | 43 (18) | 8 | 8 | 8 | 8 | 8 | 8 | 6 | 8 | 4 | 8 | 4 | 8 | — | 7 | — | 6 | — | 6 | — | 5 |
| | | 54 (16) | 8 | 8 | 8 | 8 | 8 | 8 | 7 | 8 | 6 | 8 | 5 | 8 | 4 | 8 | — | 7 | — | 6 | — | 5 |
| 24 | 362S162 | 33 (20) | 8 | 8 | 8 | 8 | 8 | 8 | 6 | 7 | 5 | 5 | 4 | 4 | — | 4 | — | — | — | — | — | — |
| | | 43 (18) | 8 | 8 | 8 | 8 | 8 | 8 | 7 | 8 | 6 | 7 | 5 | 6 | 4 | 5 | — | 4 | — | 4 | — | — |
| | | 54 (16) | 8 | 8 | 8 | 8 | 8 | 8 | 8 | 8 | 7 | 7 | 6 | 6 | 5 | 5 | 4 | 4 | 4 | 4 | — | — |
| | 362S200 | 33 (20) | 8 | 8 | 8 | 8 | 6 | 7 | 5 | 5 | 4 | 4 | — | — | — | — | — | — | — | — | — | — |
| | | 43 (18) | 8 | 8 | 8 | 8 | 7 | 8 | 5 | 6 | 4 | 5 | — | 4 | — | — | — | — | — | — | — | — |
| | | 54 (16) | 8 | 8 | 8 | 8 | 8 | 8 | 6 | 7 | 5 | 5 | 4 | 4 | — | 4 | — | — | — | — | — | — |
| | 362S250 | 43 (18) | 8 | 8 | 8 | 8 | 6 | 7 | 4 | 5 | — | 4 | — | — | — | — | — | — | — | — | — | — |
| | | 54 (16) | 8 | 8 | 8 | 8 | 7 | 7 | 5 | 5 | 4 | 4 | — | — | — | — | — | — | — | — | — | — |
| | 600S162 | 33 (20) | 8 | 8 | 8 | 8 | 8 | 8 | 6 | 8 | 5 | 7 | 4 | 6 | — | 5 | — | 4 | — | 4 | — | — |
| | | 43 (18) | 8 | 8 | 8 | 8 | 8 | 8 | 7 | 8 | 5 | 8 | 4 | 8 | 4 | 7 | — | 6 | — | 5 | — | 5 |
| | | 54 (16) | 8 | 8 | 8 | 8 | 8 | 8 | 8 | 8 | 7 | 8 | 5 | 8 | 5 | 7 | 4 | 6 | — | 6 | — | 5 |
| | 600S200 | 33 (20) | 8 | 8 | 8 | 8 | 6 | 8 | 5 | 7 | 4 | 5 | — | 4 | — | 4 | — | — | — | — | — | — |
| | | 43 (18) | 8 | 8 | 8 | 8 | 7 | 8 | 5 | 8 | 4 | 7 | — | 6 | — | 5 | — | 4 | — | 4 | — | — |
| | | 54 (16) | 8 | 8 | 8 | 8 | 8 | 8 | 6 | 8 | 5 | 8 | 4 | 6 | — | 5 | — | 5 | — | 4 | — | 4 |
| | 600S250 | 43 (18) | 8 | 8 | 8 | 8 | 5 | 8 | 4 | 7 | — | 6 | — | 5 | — | 4 | — | — | — | — | — | — |
| | | 54 (16) | 8 | 8 | 8 | 8 | 6 | 8 | 5 | 8 | 4 | 6 | — | 5 | — | 4 | — | 4 | — | — | — | — |
| | 800S162 | 43 (18) | 8 | 8 | 8 | 8 | 8 | 8 | 7 | 8 | 5 | 8 | 4 | 8 | 4 | 8 | — | 7 | — | 7 | — | 6 |
| | | 54 (16) | 8 | 8 | 8 | 8 | 8 | 8 | 8 | 8 | 7 | 8 | 6 | 8 | 5 | 8 | 4 | 8 | 4 | 7 | — | 6 |
| | 800S200 | 43 (18) | 8 | 8 | 8 | 8 | 6 | 8 | 5 | 8 | 4 | 8 | — | 7 | — | 6 | — | 5 | — | 5 | — | 4 |
| | | 54 (16) | 8 | 8 | 8 | 8 | 8 | 8 | 6 | 8 | 5 | 8 | 4 | 8 | — | 7 | — | 6 | — | 5 | — | 5 |
| | 800S250 | 43 (18) | 8 | 8 | 8 | 8 | 5 | 8 | 4 | 8 | — | 7 | — | 6 | — | 5 | — | 4 | — | 4 | — | — |
| | | 54 (16) | 8 | 8 | 8 | 8 | 6 | 8 | 5 | 8 | 4 | 7 | — | 6 | — | 5 | — | 4 | — | 4 | — | — |

1. See General Information and Notes on pp. 14–15 and 22.
2. Tabulated solutions are for ASD lateral pressure. Contact Simpson Strong-Tie for LRFD solutions.
3. Lateral pressure shall be determined based on load combinations of the applicable code. For designs in accordance with the 2009 IBC and earlier, wind pressures are at working stress level and may be used directly. For designs in accordance with the 2012 IBC and later, wind pressures are at strength level and must be multiplied by 0.6 for ASD load combinations.
4. "Min." designates a solution with the minimum number of fasteners ((1) #10 screw installed in round hole). "Max." designates a solution requiring the maximum number of fasteners ((2) #10 screws; fill both round and triangle holes). Blank areas designate conditions where the SUBH does not offer a solution.

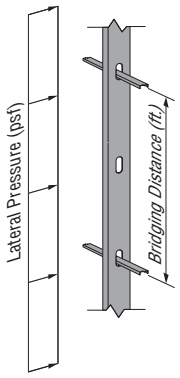


C-CF-2020 ©2020 SIMPSON STRONG-TIE COMPANY INC.

## MSUBH — Maximum Vertical Spacing for Rows of U-Channel Bridging (ft.)

| Stud Spacing (in.) | Stud Section | Stud Thickness mil (ga.) | Lateral Stud Pressure (psf) | | | | | | | | | | | | | | | | | | | |
|---|---|---|---|---|---|---|---|---|---|---|---|---|---|---|---|---|---|---|---|---|---|---|
| | | | 5 | | 10 | | 15 | | 20 | | 25 | | 30 | | 35 | | 40 | | 45 | | 50 | |
| | | | Min. | Max. | Min. | Max. | Min. | Max. | Min. | Max. | Min. | Max. | Min. | Max. | Min. | Max. | Min. | Max. | Min. | Max. | Min. | Max. |
| 16 | 362S162 | 54 (16) | 8 | 8 | 8 | 8 | 8 | 8 | 8 | 8 | 8 | 8 | 8 | 8 | 8 | 8 | 8 | 8 | 7 | 8 | 7 | 8 |
| | | 68 (14) | 8 | 8 | 8 | 8 | 8 | 8 | 8 | 8 | 8 | 8 | 8 | 8 | 8 | 8 | 8 | 8 | 8 | 8 | 8 | 8 |
| | | 97 (12) | 8 | 8 | 8 | 8 | 8 | 8 | 8 | 8 | 8 | 8 | 8 | 8 | 8 | 8 | 8 | 8 | 8 | 8 | 8 | 8 |
| | 362S200 | 54 (16) | 8 | 8 | 8 | 8 | 8 | 8 | 8 | 8 | 8 | 8 | 8 | 8 | 7 | 8 | 6 | 8 | 6 | 8 | 5 | 7 |
| | | 68 (14) | 8 | 8 | 8 | 8 | 8 | 8 | 8 | 8 | 8 | 8 | 8 | 8 | 8 | 8 | 7 | 8 | 7 | 8 | 6 | 8 |
| | | 97 (12) | 8 | 8 | 8 | 8 | 8 | 8 | 8 | 8 | 8 | 8 | 8 | 8 | 8 | 8 | 8 | 8 | 7 | 8 | 6 | 8 |
| | 362S250 | 54 (16) | 8 | 8 | 8 | 8 | 8 | 8 | 8 | 8 | 8 | 8 | 7 | 8 | 6 | 8 | 5 | 7 | 4 | 7 | 4 | 6 |
| | | 68 (14) | 8 | 8 | 8 | 8 | 8 | 8 | 8 | 8 | 8 | 8 | 8 | 8 | 7 | 8 | 6 | 8 | 5 | 7 | 5 | 6 |
| | | 97 (12) | 8 | 8 | 8 | 8 | 8 | 8 | 8 | 8 | 8 | 8 | 8 | 8 | 7 | 8 | 6 | 8 | 6 | 7 | 5 | 6 |
| | 600S162 | 54 (16) | 8 | 8 | 8 | 8 | 8 | 8 | 8 | 8 | 8 | 8 | 8 | 8 | 8 | 8 | 8 | 8 | 8 | 8 | 8 | 8 |
| | | 68 (14) | 8 | 8 | 8 | 8 | 8 | 8 | 8 | 8 | 8 | 8 | 8 | 8 | 8 | 8 | 8 | 8 | 8 | 8 | 8 | 8 |
| | | 97 (12) | 8 | 8 | 8 | 8 | 8 | 8 | 8 | 8 | 8 | 8 | 8 | 8 | 8 | 8 | 8 | 8 | 8 | 8 | 8 | 8 |
| | 600S200 | 54 (16) | 8 | 8 | 8 | 8 | 8 | 8 | 8 | 8 | 8 | 8 | 8 | 8 | 8 | 8 | 7 | 8 | 7 | 8 | 6 | 8 |
| | | 68 (14) | 8 | 8 | 8 | 8 | 8 | 8 | 8 | 8 | 8 | 8 | 8 | 8 | 8 | 8 | 8 | 8 | 8 | 8 | 7 | 8 |
| | | 97 (12) | 8 | 8 | 8 | 8 | 8 | 8 | 8 | 8 | 8 | 8 | 8 | 8 | 8 | 8 | 8 | 8 | 8 | 8 | 8 | 8 |
| | 600S250 | 54 (16) | 8 | 8 | 8 | 8 | 8 | 8 | 8 | 8 | 8 | 8 | 8 | 8 | 7 | 8 | 6 | 8 | 5 | 8 | 5 | 7 |
| | | 68 (14) | 8 | 8 | 8 | 8 | 8 | 8 | 8 | 8 | 8 | 8 | 8 | 8 | 8 | 8 | 7 | 8 | 6 | 8 | 5 | 8 |
| | | 97 (12) | 8 | 8 | 8 | 8 | 8 | 8 | 8 | 8 | 8 | 8 | 8 | 8 | 8 | 8 | 7 | 8 | 6 | 8 | 6 | 8 |
| | 800S162 | 54 (16) | 8 | 8 | 8 | 8 | 8 | 8 | 8 | 8 | 8 | 8 | 8 | 8 | 8 | 8 | 8 | 8 | 8 | 8 | 8 | 8 |
| | | 68 (14) | 8 | 8 | 8 | 8 | 8 | 8 | 8 | 8 | 8 | 8 | 8 | 8 | 8 | 8 | 8 | 8 | 8 | 8 | 8 | 8 |
| | | 97 (12) | 8 | 8 | 8 | 8 | 8 | 8 | 8 | 8 | 8 | 8 | 8 | 8 | 8 | 8 | 8 | 8 | 8 | 8 | 8 | 8 |
| | 800S200 | 54 (16) | 8 | 8 | 8 | 8 | 8 | 8 | 8 | 8 | 8 | 8 | 8 | 8 | 8 | 8 | 8 | 8 | 7 | 8 | 6 | 8 |
| | | 68 (14) | 8 | 8 | 8 | 8 | 8 | 8 | 8 | 8 | 8 | 8 | 8 | 8 | 8 | 8 | 8 | 8 | 8 | 8 | 7 | 8 |
| | | 97 (12) | 8 | 8 | 8 | 8 | 8 | 8 | 8 | 8 | 8 | 8 | 8 | 8 | 8 | 8 | 8 | 8 | 8 | 8 | 8 | 8 |
| | 800S250 | 54 (16) | 8 | 8 | 8 | 8 | 8 | 8 | 8 | 8 | 8 | 8 | 8 | 8 | 7 | 8 | 6 | 8 | 5 | 8 | 5 | 8 |
| | | 68 (14) | 8 | 8 | 8 | 8 | 8 | 8 | 8 | 8 | 8 | 8 | 8 | 8 | 8 | 8 | 7 | 8 | 6 | 8 | 6 | 8 |
| | | 97 (12) | 8 | 8 | 8 | 8 | 8 | 8 | 8 | 8 | 8 | 8 | 8 | 8 | 8 | 8 | 8 | 8 | 7 | 8 | 6 | 8 |
| | 1000S162 | 54 (16) | — | 8 | — | 8 | — | 8 | — | 8 | — | 8 | — | 8 | — | 8 | — | 8 | — | 8 | — | 8 |
| | | 68 (14) | — | 8 | — | 8 | — | 8 | — | 8 | — | 8 | — | 8 | — | 8 | — | 8 | — | 8 | — | 8 |
| | | 97 (12) | — | 8 | — | 8 | — | 8 | — | 8 | — | 8 | — | 8 | — | 8 | — | 8 | — | 8 | — | 8 |
| | 1000S200 | 54 (16) | — | 8 | — | 8 | — | 8 | — | 8 | — | 8 | — | 8 | — | 8 | — | 8 | — | 8 | — | 8 |
| | | 68 (14) | — | 8 | — | 8 | — | 8 | — | 8 | — | 8 | — | 8 | — | 8 | — | 8 | — | 8 | — | 8 |
| | | 97 (12) | — | 8 | — | 8 | — | 8 | — | 8 | — | 8 | — | 8 | — | 8 | — | 8 | — | 8 | — | 8 |
| | 1000S250 | 54 (16) | — | 8 | — | 8 | — | 8 | — | 8 | — | 8 | — | 8 | — | 8 | — | 8 | — | 8 | — | 8 |
| | | 68 (14) | — | 8 | — | 8 | — | 8 | — | 8 | — | 8 | — | 8 | — | 8 | — | 8 | — | 8 | — | 8 |
| | | 97 (12) | — | 8 | — | 8 | — | 8 | — | 8 | — | 8 | — | 8 | — | 8 | — | 8 | — | 8 | — | 8 |
| | 1200S162 | 54 (16) | — | 8 | — | 8 | — | 8 | — | 8 | — | 8 | — | 8 | — | 8 | — | 8 | — | 8 | — | 8 |
| | | 68 (14) | — | 8 | — | 8 | — | 8 | — | 8 | — | 8 | — | 8 | — | 8 | — | 8 | — | 8 | — | 8 |
| | | 97 (12) | — | 8 | — | 8 | — | 8 | — | 8 | — | 8 | — | 8 | — | 8 | — | 8 | — | 8 | — | 8 |
| | 1200S200 | 54 (16) | — | 8 | — | 8 | — | 8 | — | 8 | — | 8 | — | 8 | — | 8 | — | 8 | — | 8 | — | 8 |
| | | 68 (14) | — | 8 | — | 8 | — | 8 | — | 8 | — | 8 | — | 8 | — | 8 | — | 8 | — | 8 | — | 8 |
| | | 97 (12) | — | 8 | — | 8 | — | 8 | — | 8 | — | 8 | — | 8 | — | 8 | — | 8 | — | 8 | — | 8 |
| | 1200S250 | 54 (16) | — | 8 | — | 8 | — | 8 | — | 8 | — | 8 | — | 8 | — | 8 | — | 8 | — | 8 | — | 8 |
| | | 68 (14) | — | 8 | — | 8 | — | 8 | — | 8 | — | 8 | — | 8 | — | 8 | — | 8 | — | 8 | — | 8 |
| | | 97 (12) | — | 8 | — | 8 | — | 8 | — | 8 | — | 8 | — | 8 | — | 8 | — | 8 | — | 8 | — | 8 |

1. See General Information and Notes on pp. 14–15 and 22.
2. Tabulated solutions are for ASD lateral pressure. Contact Simpson Strong-Tie for LRFD solutions.
3. Lateral pressure shall be determined based on load combinations of the applicable code. For designs in accordance with the 2009 IBC and earlier, wind pressures are at working stress level and may be used directly. For designs in accordance with the 2012 IBC and later, wind pressures are at strength level and must be multiplied by 0.6 for ASD load combinations.
4. "Min." designates a solution with the minimum number of fasteners ((1) #10 screw installed in round hole). "Max." designates a solution requiring the maximum number of fasteners ((2) #10 screws; fill both round and triangle holes). Blank areas designate conditions where the MSUBH does not offer a solution.

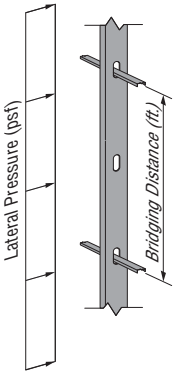


C-CF-2020 ©2020 SIMPSON STRONG-TIE COMPANY INC.

# **SUBH** Design Tables

SIMPSON Strong-Tie®



## MSUBH — Maximum Vertical Spacing for Rows of U-Channel Bridging (ft.) (cont.)

| Stud Spacing (in.) | Stud Section | Stud Thickness mil (ga.) | Lateral Stud Pressure (psf) | | | | | | | | | | | | | | | | | | | |
|---|---|---|---|---|---|---|---|---|---|---|---|---|---|---|---|---|---|---|---|---|---|---|
| | | | 5 | | 10 | | 15 | | 20 | | 25 | | 30 | | 35 | | 40 | | 45 | | 50 | |
| | | | Min. | Max. | Min. | Max. | Min. | Max. | Min. | Max. | Min. | Max. | Min. | Max. | Min. | Max. | Min. | Max. | Min. | Max. | Min. | Max. |
| 24 | 362S162 | 54 (16) | 8 | 8 | 8 | 8 | 8 | 8 | 8 | 8 | 8 | 8 | 7 | 8 | 6 | 8 | 5 | 8 | 5 | 7 | 4 | 6 |
| | | 68 (14) | 8 | 8 | 8 | 8 | 8 | 8 | 8 | 8 | 8 | 8 | 8 | 8 | 7 | 8 | 6 | 8 | 6 | 8 | 5 | 7 |
| | | 97 (12) | 8 | 8 | 8 | 8 | 8 | 8 | 8 | 8 | 8 | 8 | 8 | 8 | 8 | 8 | 7 | 8 | 6 | 8 | 5 | 7 |
| | 362S200 | 54 (16) | 8 | 8 | 8 | 8 | 8 | 8 | 8 | 8 | 7 | 8 | 6 | 8 | 5 | 7 | 4 | 6 | 4 | 5 | — | 5 |
| | | 68 (14) | 8 | 8 | 8 | 8 | 8 | 8 | 8 | 8 | 8 | 8 | 7 | 8 | 6 | 8 | 5 | 7 | 4 | 6 | 4 | 5 |
| | | 97 (12) | 8 | 8 | 8 | 8 | 8 | 8 | 8 | 8 | 8 | 8 | 7 | 8 | 6 | 8 | 5 | 7 | 5 | 6 | 4 | 5 |
| | 362S250 | 54 (16) | 8 | 8 | 8 | 8 | 8 | 8 | 7 | 8 | 5 | 8 | 4 | 7 | 4 | 6 | — | 5 | — | 4 | — | 4 |
| | | 68 (14) | 8 | 8 | 8 | 8 | 8 | 8 | 8 | 8 | 6 | 8 | 5 | 7 | 4 | 6 | 4 | 5 | — | 5 | — | 4 |
| | | 97 (12) | 8 | 8 | 8 | 8 | 8 | 8 | 8 | 8 | 7 | 8 | 6 | 7 | 5 | 6 | 4 | 5 | 4 | 5 | — | 4 |
| | 600S162 | 54 (16) | 8 | 8 | 8 | 8 | 8 | 8 | 8 | 8 | 8 | 8 | 8 | 8 | 8 | 8 | 7 | 8 | 6 | 8 | 5 | 8 |
| | | 68 (14) | 8 | 8 | 8 | 8 | 8 | 8 | 8 | 8 | 8 | 8 | 8 | 8 | 8 | 8 | 8 | 8 | 7 | 8 | 6 | 8 |
| | | 97 (12) | 8 | 8 | 8 | 8 | 8 | 8 | 8 | 8 | 8 | 8 | 8 | 8 | 8 | 8 | 8 | 8 | 8 | 8 | 7 | 8 |
| | 600S200 | 54 (16) | 8 | 8 | 8 | 8 | 8 | 8 | 8 | 8 | 8 | 8 | 7 | 8 | 6 | 8 | 5 | 8 | 4 | 7 | 4 | 6 |
| | | 68 (14) | 8 | 8 | 8 | 8 | 8 | 8 | 8 | 8 | 8 | 8 | 8 | 8 | 7 | 8 | 6 | 8 | 5 | 7 | 4 | 7 |
| | | 97 (12) | 8 | 8 | 8 | 8 | 8 | 8 | 8 | 8 | 8 | 8 | 8 | 8 | 7 | 8 | 6 | 8 | 5 | 8 | 5 | 7 |
| | 600S250 | 54 (16) | 8 | 8 | 8 | 8 | 8 | 8 | 8 | 8 | 6 | 8 | 5 | 8 | 4 | 7 | 4 | 6 | — | 5 | — | 5 |
| | | 68 (14) | 8 | 8 | 8 | 8 | 8 | 8 | 8 | 8 | 7 | 8 | 6 | 8 | 5 | 7 | 4 | 6 | 4 | 6 | — | 5 |
| | | 97 (12) | 8 | 8 | 8 | 8 | 8 | 8 | 8 | 8 | 8 | 8 | 6 | 8 | 5 | 8 | 5 | 7 | 4 | 6 | 4 | 5 |
| | 800S162 | 54 (16) | 8 | 8 | 8 | 8 | 8 | 8 | 8 | 8 | 8 | 8 | 8 | 8 | 8 | 8 | 7 | 8 | 6 | 8 | 6 | 8 |
| | | 68 (14) | 8 | 8 | 8 | 8 | 8 | 8 | 8 | 8 | 8 | 8 | 8 | 8 | 8 | 8 | 8 | 8 | 8 | 8 | 7 | 8 |
| | | 97 (12) | 8 | 8 | 8 | 8 | 8 | 8 | 8 | 8 | 8 | 8 | 8 | 8 | 8 | 8 | 8 | 8 | 8 | 8 | 7 | 8 |
| | 800S200 | 54 (16) | 8 | 8 | 8 | 8 | 8 | 8 | 8 | 8 | 8 | 8 | 7 | 8 | 6 | 8 | 5 | 8 | 5 | 8 | 4 | 7 |
| | | 68 (14) | 8 | 8 | 8 | 8 | 8 | 8 | 8 | 8 | 8 | 8 | 8 | 8 | 7 | 8 | 6 | 8 | 5 | 8 | 5 | 7 |
| | | 97 (12) | 8 | 8 | 8 | 8 | 8 | 8 | 8 | 8 | 8 | 8 | 8 | 8 | 8 | 8 | 7 | 8 | 6 | 8 | 5 | 8 |
| | 800S250 | 54 (16) | 8 | 8 | 8 | 8 | 8 | 8 | 8 | 8 | 7 | 8 | 5 | 8 | 5 | 8 | 4 | 7 | — | 6 | — | 5 |
| | | 68 (14) | 8 | 8 | 8 | 8 | 8 | 8 | 8 | 8 | 8 | 8 | 6 | 8 | 5 | 8 | 5 | 7 | 4 | 6 | 4 | 6 |
| | | 97 (12) | 8 | 8 | 8 | 8 | 8 | 8 | 8 | 8 | 8 | 8 | 7 | 8 | 6 | 8 | 5 | 7 | 4 | 7 | 4 | 6 |
| | 1000S162 | 54 (16) | — | 8 | — | 8 | — | 8 | — | 8 | — | 8 | — | 8 | — | 8 | — | 8 | — | 8 | — | 8 |
| | | 68 (14) | — | 8 | — | 8 | — | 8 | — | 8 | — | 8 | — | 8 | — | 8 | — | 8 | — | 8 | — | 8 |
| | | 97 (12) | — | 8 | — | 8 | — | 8 | — | 8 | — | 8 | — | 8 | — | 8 | — | 8 | — | 8 | — | 8 |
| | 1000S200 | 54 (16) | — | 8 | — | 8 | — | 8 | — | 8 | — | 8 | — | 8 | — | 8 | — | 8 | — | 8 | — | 7 |
| | | 68 (14) | — | 8 | — | 8 | — | 8 | — | 8 | — | 8 | — | 8 | — | 8 | — | 8 | — | 8 | — | 7 |
| | | 97 (12) | — | 8 | — | 8 | — | 8 | — | 8 | — | 8 | — | 8 | — | 8 | — | 8 | — | 8 | — | 7 |
| | 1000S250 | 54 (16) | — | 8 | — | 8 | — | 8 | — | 8 | — | 8 | — | 8 | — | 8 | — | 7 | — | 6 | — | 5 |
| | | 68 (14) | — | 8 | — | 8 | — | 8 | — | 8 | — | 8 | — | 8 | — | 8 | — | 7 | — | 6 | — | 5 |
| | | 97 (12) | — | 8 | — | 8 | — | 8 | — | 8 | — | 8 | — | 8 | — | 8 | — | 7 | — | 6 | — | 5 |
| | 1200S162 | 54 (16) | — | 8 | — | 8 | — | 8 | — | 8 | — | 8 | — | 8 | — | 8 | — | 8 | — | 8 | — | 8 |
| | | 68 (14) | — | 8 | — | 8 | — | 8 | — | 8 | — | 8 | — | 8 | — | 8 | — | 8 | — | 8 | — | 8 |
| | | 97 (12) | — | 8 | — | 8 | — | 8 | — | 8 | — | 8 | — | 8 | — | 8 | — | 8 | — | 8 | — | 8 |
| | 1200S200 | 54 (16) | — | 8 | — | 8 | — | 8 | — | 8 | — | 8 | — | 8 | — | 8 | — | 8 | — | 8 | — | 8 |
| | | 68 (14) | — | 8 | — | 8 | — | 8 | — | 8 | — | 8 | — | 8 | — | 8 | — | 8 | — | 8 | — | 8 |
| | | 97 (12) | — | 8 | — | 8 | — | 8 | — | 8 | — | 8 | — | 8 | — | 8 | — | 8 | — | 8 | — | 8 |
| | 1200S250 | 54 (16) | — | 8 | — | 8 | — | 8 | — | 8 | — | 8 | — | 8 | — | 8 | — | 7 | — | 6 | — | 6 |
| | | 68 (14) | — | 8 | — | 8 | — | 8 | — | 8 | — | 8 | — | 8 | — | 8 | — | 7 | — | 6 | — | 6 |
| | | 97 (12) | — | 8 | — | 8 | — | 8 | — | 8 | — | 8 | — | 8 | — | 8 | — | 7 | — | 7 | — | 6 |

1. See General Information and Notes on pp. 14–15 and 22.
2. Tabulated solutions are for ASD lateral pressure. Contact Simpson Strong-Tie for LRFD solutions.
3. Lateral pressure shall be determined based on load combinations of the applicable code. For designs in accordance with the 2009 IBC and earlier, wind pressures are at working stress level and may be used directly. For designs in accordance with the 2012 IBC and later, wind pressures are at strength level and must be multiplied by 0.6 for ASD load combinations.
4. "Min." designates a solution with the minimum number of fasteners ((1) #10 screw installed in round hole). "Max." designates a solution requiring the maximum number of fasteners ((2) #10 screws; fill both round and triangle holes). Blank areas designate conditions where the MSUBH does not offer a solution.

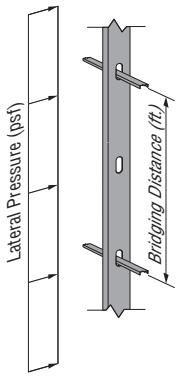


C-CF-2020 ©2020 SIMPSON STRONG-TIE COMPANY INC.

## Example #1: Curtain-Wall Stud

### Given

- 2015 IBC (ASCE 7-10 and AISI S100-2012)
- 600S162–43 (33 ksi) studs at 24" o.c.
- 10'-tall studs with mid-point bracing (5' o.c.)
- Wind design pressure = 41 psf

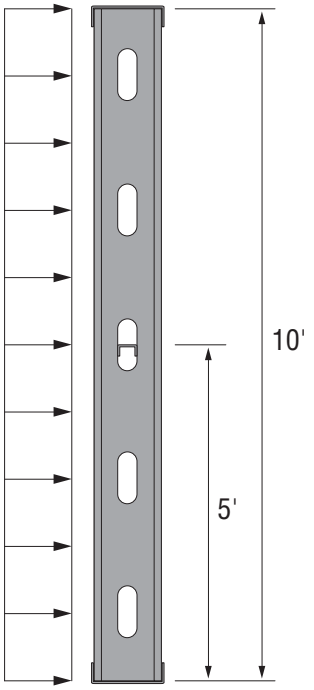


### Select Connector Using Design Table (p. 125)

ASD wind pressure:

p = (0.6)(41 psf) = 24.6 psf

**Note:** 2015 IBC load combinations for ASD include a factor of 0.6 for wind loads.

For 600S162-43 stud with SUBH3.25 connector, and 25 psf wind pressure with 5' bracing distance:

➡ SUBH3.25 with Min. fasteners **OK**

### Notes

1. Only lateral load has been included for clarity. Design of curtain-wall studs should consider load combinations with vertical load in accordance with the applicable building code (see Example #2).
2. Bridging connector may also be designed using Allowable Loads table on p. 123 (see Example #2).

## Example #2: Exterior Bearing-Wall Stud

### Given

- 2015 IBC (ASCE 7-10 and AISI S100-2012)
- 600S162–54 (50 ksi) studs at 24" o.c., 10' tall
  Mid-point bracing (5' o.c.)
  Required axial stud strength, $P_{ra}$ = 2,200 lb.
  Distance from shear center to mid-plane of web, m = 0.663" (2013 AISI Manual, Table I-2)
- Wind design pressure = 34 psf

### Axially-Loaded Stud Design

Required brace strength (AISI S100 Eq. D3.3-1):

$P_{br,1} = 0.01P_{ra}$ = (0.01)(2,200 lb.) = 22 lb.

Required brace stiffness (AISI S100 Eq. D3.3-2a):

$\beta_{rb} = \{2[4 - (2/n)]/Lb\}\Omega P_{ra} = \{2[4 - (2/1)]/60 \text{ in.}\}(2)(2{,}200) = 294$ lb./in.

From Allowable Loads table (p. 123) for 6"-deep 54-mil stud:

➡ Select SUBH3.25 with Min. fasteners
Allowable brace strength = 275 lb. > 22 lb. **OK**
Brace stiffness = 1,130 lb./in. > 294 lb./in. **OK**

### Laterally-Loaded Stud Design

Design load tributary to a single connector:

W = (0.6)(34 psf)(2 ft.)(5 ft.) = 204 lb.

**Note:** 2015 IBC load combinations for ASD include a factor of 0.6 for wind loads.

Required flange force (AISI S100 Eq. D3.2.1-3):

$P_{L1} = -P_{L2} = 1.5(m/d)W$ = (1.5)(0.663 in./6 in.)(204 lb.) = 33.8 lb.

Torsional moment:

$M_z = P_{L1}d = -P_{L2}d$ = (33.8 lb.)(6 in.) = 203 in.-lb.

From Allowable Loads table (p. 123) for 6"-deep 54-mil stud:

➡ Select SUBH3.25 with Min. fasteners
Allowable torsional moment = 350 in.-lb. > 203 in.-lb. **OK**

### Combined-Loading Check

($P_{br,1}$/Allowable brace strength) + ($M_z$/Allowable torsional moment) = (22 lb./275 lb.) + (203 in.-lb./350 in.-lb.) = 0.66 < 1.0 **OK**

C-CF-2020 ©2020 SIMPSON STRONG-TIE COMPANY INC.

# **SBR/DBR** Spacer Bracers



***This product is preferable to similar connectors because of a) easier installation, b) higher loads, c) lower installed cost, or a combination of these features.***

Simpson Strong-Tie introduces the SBR and DBR spacer bracers for cold-formed steel construction. These spacer bracers reduce the installed cost of cold-formed steel stud walls by enabling faster stud layout while minimizing the need for bridging clips.

The DBR is used for interior walls to eliminate stud bow and allow for quicker drywall attachment, while the SBR is designed for structural exterior walls. Both products provide bracing along the length of the stud, and for head-of-wall slip conditions. The SBR and DBR also come with prepunched slots that eliminate the need to use bridging clips with on-module studs.

The SBR and DBR spacer bracers come with bracing load data based on assembly testing, thus mitigating risk for designers and maximizing confidence in design specs. In fact, the SBR and DBR are the only spacer bracers on the market with tabulated design values based on assembly tests.

**Features:**

- SBR and DBR have patent-pending precision-engineered prepunched slots strategically located to enable 12", 16" and 24" on-center stud spacing and can be used to space the studs without having to mark the top track for layout
- The SBR will accommodate 3⅝" and 6" studs in thicknesses of 33 mil (20 ga.) thru 68 mil (14 ga.)
- The DBR will accommodate 2½", 3⅝" and 6" studs in thicknesses of 15 mil (25 ga. EQ) through 33 mil (20 ga.)
- Prepunched holes in the SBR provide rapid screw installation when spacer-bracer splices are needed for axial load-bearing studs
- In off-layout or end-of run conditions, the hat-section profiles enable clip attachments to the stud with Simpson Strong-Tie® LSSC or RCA connectors

**Installation:**

- Spacer bracers are fed through the stud knockout at a 90° angle until studs align with spacer-bracer slots. With the slots engaging the stud web, the spacer-bracer is then rotated back to the flat position so that the slotted flanges are on the bottom.
- For off-layout or end-of-run studs where a spacer-bracer slot does not engage a stud, manually snip the spacer-bracer flanges with a ½"-deep slot and secure the spacer bracer to the stud with Simpson Strong-Tie LSSC or RCA connectors. Use all specified fasteners.
- Wear gloves while handling and installing spacer bracers.

**Material:** SBR/43 — 43 mil (40 ksi); DBR/30 — 27 mil (33 ksi)

**Finish:** Galvanized (G90)

**Codes:** See p. 11 for Code Reference Key Chart

**Ordering Information:**

SBR/43-R680 (Pallet 680) SBR/43-R20 (Box of 20)
DBR/30-R680 (Pallet 680) DBR/30-R20 (Box of 20)

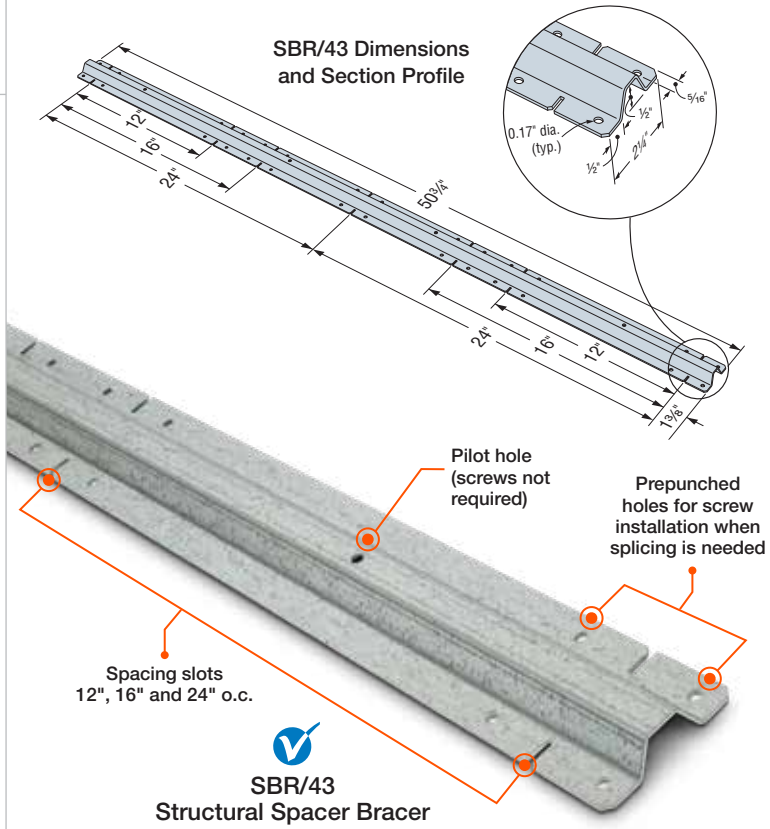


**SBR/43**
**Structural Spacer Bracer**
Patent Pending

**NEW DESIGN**
Spacing slot redesigned to strengthen and allow easier installation.

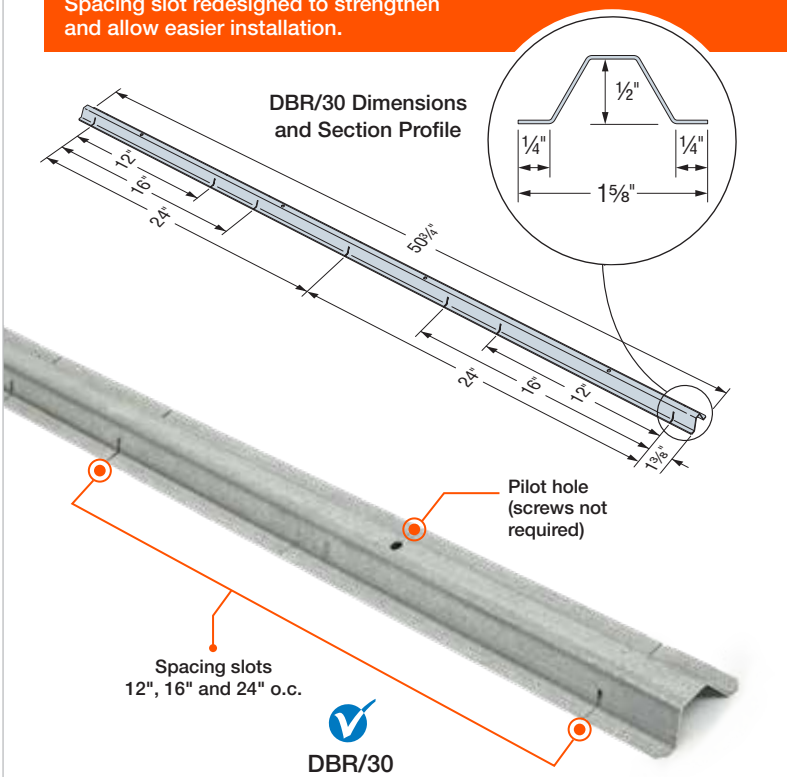


**DBR/30**
**Drywall Spacer Bracer**
Patent Pending

C-CF-2020 ©2020 SIMPSON STRONG-TIE COMPANY INC.

# **SBR/DBR** Spacer Bracers



## SBR and DBR Spacer Bracer — Connection Strength and Stiffness

| Model No. | Stud Depth (in.) | Stud Thickness mil (ga.) | Allowable Torsional Moment (in./lb.) | Allowable Brace Strength (lb.) | Brace Stiffness (lb./in.) | Code Ref. |
|---|---|---|---|---|---|---|
| SBR/43 | 3⅝ | 33 (20) | 235 | 390 | 845 | — |
| | | 43 (18) | 310 | 435 | 1,390 | |
| | | 54 (16) | 400 | 435 | 1,390 | |
| | | 68 (14) | 400 | 435 | 1,390 | |
| | 6 | 33 (20) | 215 | 160 | 495 | |
| | | 43 (18) | 310 | 330 | 765 | |
| | | 54 (16) | 365 | 450 | 840 | |
| | | 68 (14) | 365 | 450 | 840 | |
| DBR/30 | 2½ | 15 (25 EQ) | 55 | — | — | |
| | | 18 (25) | 55 | — | — | |
| | | 19 (20 EQ) | 60 | — | — | |
| | | 30 (20 DW) | 85 | — | — | |
| | | 33 (20 STR) | 90 | — | — | |
| | 6 | 15 (25 EQ) | 55 | — | — | |
| | | 18 (25) | 55 | — | — | |
| | | 19 (20 EQ) | 60 | — | — | |
| | | 30 (20 DW) | 85 | — | — | |
| | | 33 (20 STR) | 90 | — | — | |

1. Allowable loads are for use when utilizing the traditional Allowable Stress Design methodology. For LRFD loads multiply the ASD tabulated values by 1.6.
2. Tabulated Allowable Brace Strengths are based on ultimate test load divided by a safety factor. Serviceability limit is not considered, as brace stiffness requirements are given in section D3.3 of AISI S100-2012.
3. Tabulated Brace Stiffness values apply to both ASD and LRFD designs.
4. Allowable loads consider bridging connection only. It is the responsibility of the designer to verify the strength and serviceability of the framing members.
5. EQ — equivalent, DW — drywall, STR — structural.

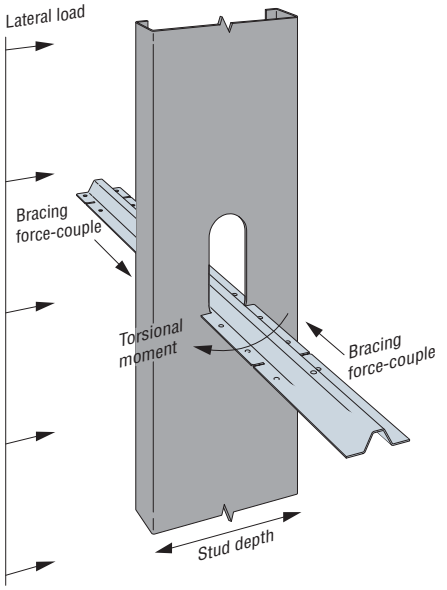


**Laterally Loaded C-Stud with SBR Spacer Bracer**
*(DBR spacer bracer similar)*

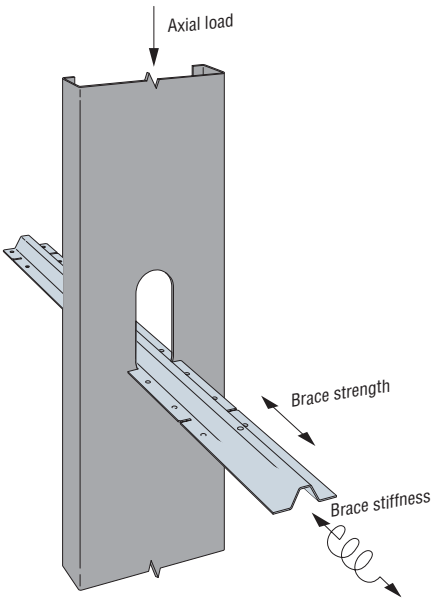


**Axially Loaded C-Stud with SBR Spacer Bracer**

C-CF-2020 ©2020 SIMPSON STRONG-TIE COMPANY INC.

# **SBR/DBR** Spacer Bracers





## SBR and DBR Gross Properties

| Model No. | Design Thickness (in.) | $F_y$ (ksi) | Area[2] (in.) | $I_x$[4] (in.) | $S_x$[3] (in.) | $R_x$ (in.) | $I_y$[4] (in.) | $S_y$[3] (in.) | $R_y$ (in.) | Torsional Properties | | | | | |
|---|---|---|---|---|---|---|---|---|---|---|---|---|---|---|---|
| | | | | | | | | | | Jx1,000[4] (in.) | $C_w$[6] (in.) | $Y_o$ (in.) | m (in.) | $R_o$ (in.) | β |
| SBR/43 | 0.0468 | 40 | 0.126 | 0.0047 | 0.1458 | 0.1936 | 0.0436 | 0.0400 | 0.5891 | 0.0916 | 5.56E-04 | 0.283 | 0.017 | 0.681 | 0.828 |
| DBR/30 | 0.0289 | 33 | 0.060 | 0.0023 | 0.0082 | 0.1936 | 0.0109 | 0.0141 | 0.4259 | 0.0167 | 7.05E-05 | 0.346 | 0.087 | 0.582 | 0.647 |

## SBR and DBR Net Properties

| Model No. | Area[2] (in.) | $I_x$[4] (in.) | $S_x$[3] (in.) | $R_x$ (in.) | $I_y$[4] (in.) | $S_y$[3] (in.) | $R_y$ (in.) | Torsional Properties | | | | | |
|---|---|---|---|---|---|---|---|---|---|---|---|---|---|
| | | | | | | | | Jx1,000[4] (in.) | $C_w$[6] (in.) | $Y_o$ (in.) | m (in.) | $R_o$ (in.) | β |
| SBR/43 | 0.085 | 0.0028 | 0.0097 | 0.1816 | 0.0120 | 0.0184 | 0.3765 | 0.0617 | 3.43E-05 | 0.355 | 0.141 | 0.548 | 0.581 |
| DBR/30 | 0.022 | 0.0001 | 0.0004 | 0.0479 | 0.0008 | 0.0027 | 0.1944 | 0.0061 | 1.09E-06 | 0.086 | 0.051 | 0.218 | 0.844 |

## SBR and DBR Allowable Member Strengths

| Model No. | $M_a$ ($F_y$) (in.-lb.) | $M_a$ (12" o.c.) (in.-lb.) | $M_a$ (16" o.c.) (in.-lb.) | Ma (24" o.c.) (in.-lb.) | $P_a$ (12" o.c.) (lb.) | $P_a$ (16" o.c.) (lb.) | $P_a$ (24" o.c.) (lb.) |
|---|---|---|---|---|---|---|---|
| SBR/43 | 369 | 369 | 369 | 360 | 945 | 904 | 618 |
| DBR/30 | 44 | 40 | 38 | 32 | — | — | — |

1. Net section properties are based a section that excludes all material that is interrupted by the slots.
2. Member strengths are based on DSM Analysis (non-prequalified section, Ω = 2.0).
3. $C_b$ = 1.67 has been applied to $M_a$ to account for a triangular moment diagram with zero end moment.

C-CF-2020 ©2020 SIMPSON STRONG-TIE COMPANY INC.

# **SBR/DBR** Spacer Bracers



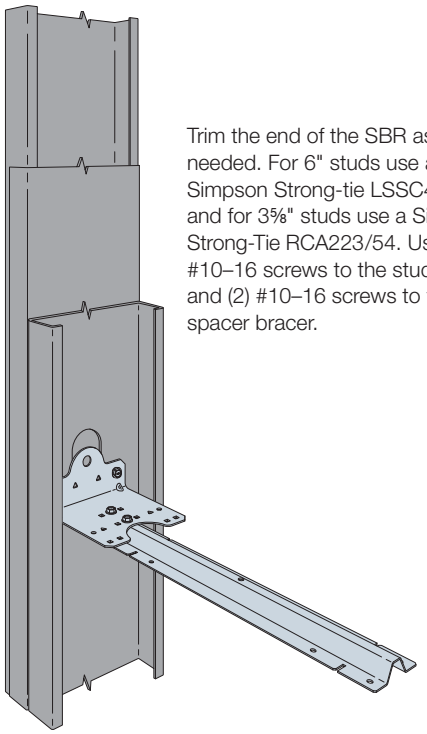

Trim the end of the SBR as needed. For 6" studs use a Simpson Strong-tie LSSC4.25 and for 3⅝" studs use a Simpson Strong-Tie RCA223/54. Use (2) #10–16 screws to the stud web, and (2) #10–16 screws to the spacer bracer.

**SBR End-of-Run for 6" Studs with LSSC4.25**
*(3⅝" studs with RCA 223/54 similar)*

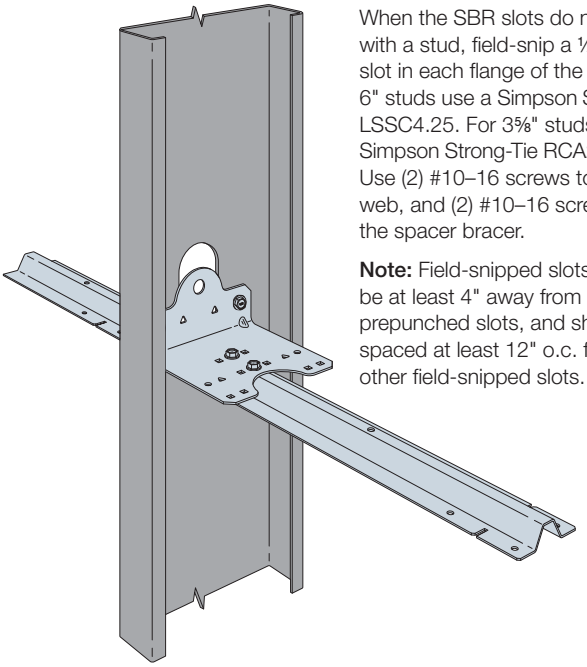

When the SBR slots do not line-up with a stud, field-snip a ½"-deep slot in each flange of the SBR. For 6" studs use a Simpson Strong-Tie LSSC4.25. For 3⅝" studs use a Simpson Strong-Tie RCA223/54. Use (2) #10–16 screws to the stud web, and (2) #10–16 screws to the spacer bracer.

**Note:** Field-snipped slots shall be at least 4" away from other prepunched slots, and shall be spaced at least 12" o.c. from other field-snipped slots.

**SBR Off-Module for 6" Studs with LSSC4.25**
*(3⅝" studs with RCA 223/54 similar)*

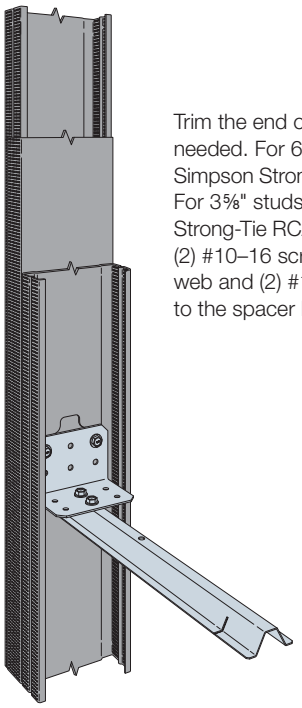

Trim the end of the DBR as needed. For 6" studs use a Simpson Strong-Tie LSSC4.25. For 3⅝" studs use a Simpson Strong-Tie RCA223/54. Use (2) #10–16 screws to the stud web and (2) #10–16 screws to the spacer bracer.

**DBR End-of-Run for 3⅝" Studs with RCA223/54**
*(6" studs with LSSC4.25 similar)*

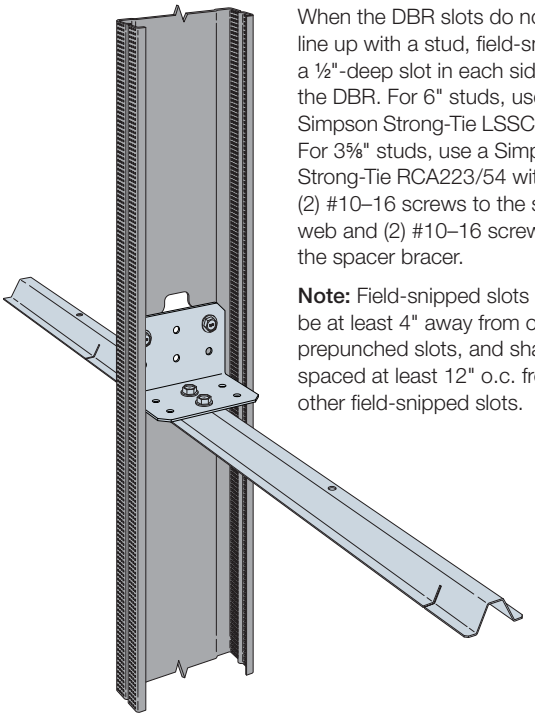

When the DBR slots do not line up with a stud, field-snip a ½"-deep slot in each side of the DBR. For 6" studs, use a Simpson Strong-Tie LSSC4.25. For 3⅝" studs, use a Simpson Strong-Tie RCA223/54 with (2) #10–16 screws to the stud web and (2) #10–16 screws to the spacer bracer.

**Note:** Field-snipped slots shall be at least 4" away from other prepunched slots, and shall be spaced at least 12" o.c. from other field-snipped slots.

**DBR Off-Module for 3⅝" Studs with RCA223/54**
*(6" studs with LSSC4.25 similar)*

C-CF-2020 ©2020 SIMPSON STRONG-TIE COMPANY INC.

# **SBR/DBR** Spacer Bracers



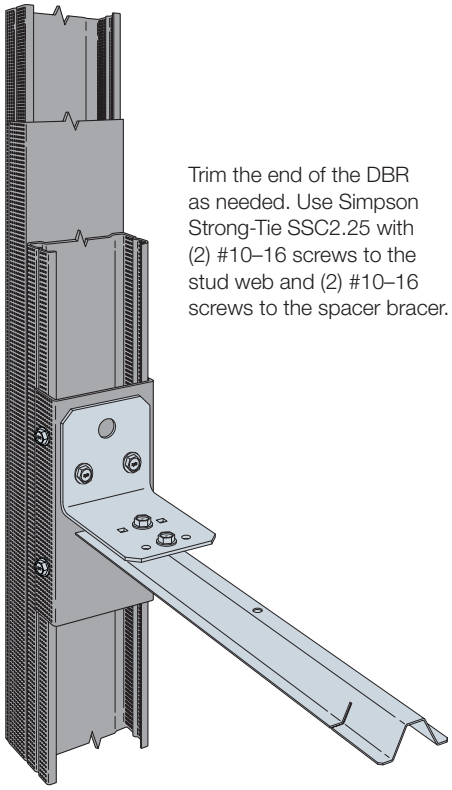

Trim the end of the DBR as needed. Use Simpson Strong-Tie SSC2.25 with (2) #10–16 screws to the stud web and (2) #10–16 screws to the spacer bracer.

**DBR End-of-Run for 2.5" Studs with SSC2.25**

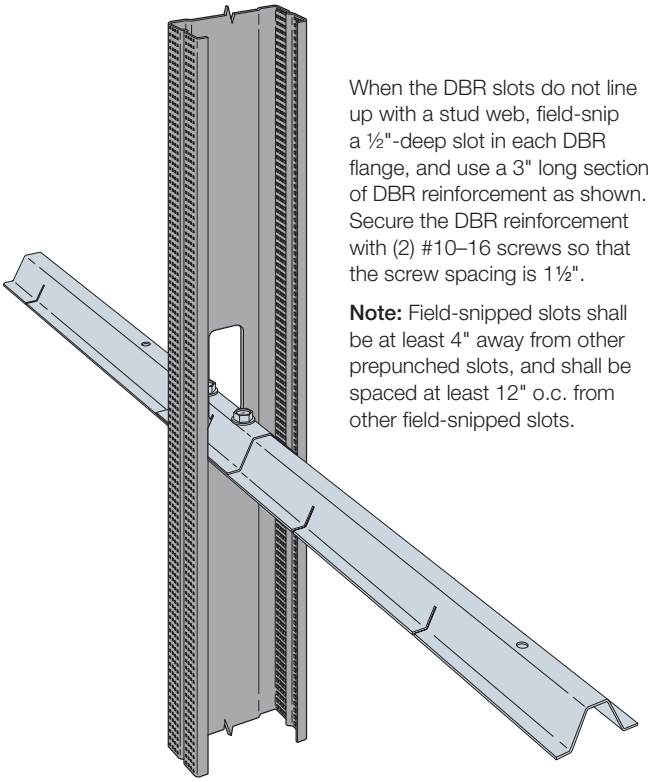

When the DBR slots do not line up with a stud web, field-snip a ½"-deep slot in each DBR flange, and use a 3" long section of DBR reinforcement as shown. Secure the DBR reinforcement with (2) #10–16 screws so that the screw spacing is 1½".

**Note:** Field-snipped slots shall be at least 4" away from other prepunched slots, and shall be spaced at least 12" o.c. from other field-snipped slots.

**DBR Off-Module for 2½" Studs with DBR Reinforcement**
*(DBR and SBR with 3⅝" studs and 6" studs similar)*

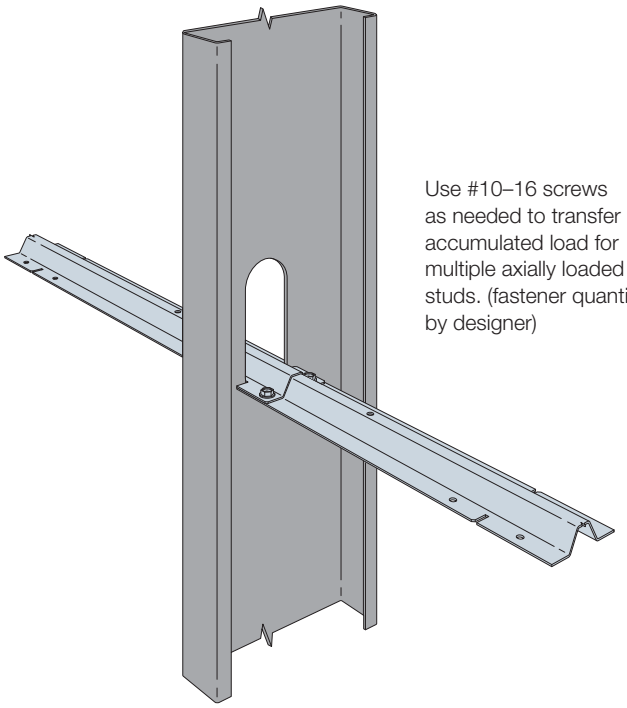

Use #10–16 screws as needed to transfer accumulated load for multiple axially loaded studs. (fastener quantity by designer)

**Typical SBR Splice for Axially Loaded Studs**

C-CF-2020 ©2020 SIMPSON STRONG-TIE COMPANY INC.

# **SBR/DBR** Spacer Bracers



## SBR/43 Maximum Bridging Distance (ft.)

| Stud Spacing (in.) | Stud Section | Stud Thickness mil (ga.) | Lateral Stud Pressure (psf) | | | | | | | | | |
|---|---|---|---|---|---|---|---|---|---|---|---|---|
| | | | 5 | 10 | 15 | 20 | 25 | 30 | 35 | 40 | 45 | 50 |
| 12 | 362S162 | 33 (20) | 8 | 8 | 8 | 8 | 7 | 6 | 5 | 4 | 4 | — |
| | | 43 (18) | 8 | 8 | 8 | 8 | 8 | 8 | 7 | 6 | 5 | 5 |
| | | 54 (16) | 8 | 8 | 8 | 8 | 8 | 8 | 8 | 7 | 7 | 6 |
| | | 68 (14) | 8 | 8 | 8 | 8 | 8 | 8 | 8 | 8 | 7 | 6 |
| | 362S200 | 33 (20) | 8 | 8 | 8 | 7 | 6 | 5 | 4 | — | — | — |
| | | 43 (18) | 8 | 8 | 8 | 8 | 8 | 6 | 5 | 5 | 4 | 4 |
| | | 54 (16) | 8 | 8 | 8 | 8 | 8 | 8 | 6 | 6 | 5 | 4 |
| | | 68 (14) | 8 | 8 | 8 | 8 | 8 | 8 | 6 | 6 | 5 | 4 |
| | 600S162 | 33 (20) | 8 | 8 | 8 | 8 | 8 | 7 | 6 | 5 | 4 | 4 |
| | | 43 (18) | 8 | 8 | 8 | 8 | 8 | 8 | 8 | 7 | 6 | 6 |
| | | 54 (16) | 8 | 8 | 8 | 8 | 8 | 8 | 8 | 8 | 8 | 7 |
| | | 68 (14) | 8 | 8 | 8 | 8 | 8 | 8 | 8 | 8 | 8 | 7 |
| | 600S200 | 33 (20) | 8 | 8 | 8 | 7 | 6 | 5 | 4 | — | — | — |
| | | 43 (18) | 8 | 8 | 8 | 8 | 8 | 7 | 6 | 5 | 5 | 4 |
| | | 54 (16) | 8 | 8 | 8 | 8 | 8 | 8 | 7 | 6 | 6 | 5 |
| | | 68 (14) | 8 | 8 | 8 | 8 | 8 | 8 | 7 | 6 | 6 | 5 |
| 16 | 362S162 | 33 (20) | 8 | 8 | 8 | 7 | 5 | 4 | 4 | — | — | — |
| | | 43 (18) | 8 | 8 | 8 | 8 | 7 | 6 | 5 | 4 | 4 | — |
| | | 54 (16) | 8 | 8 | 8 | 8 | 8 | 7 | 6 | 5 | 5 | 4 |
| | | 68 (14) | 8 | 8 | 8 | 8 | 8 | 8 | 6 | 6 | 5 | 4 |
| | 362S200 | 33 (20) | 8 | 8 | 7 | 5 | 4 | — | — | — | — | — |
| | | 43 (18) | 8 | 8 | 8 | 7 | 6 | 5 | 4 | — | — | — |
| | | 54 (16) | 8 | 8 | 8 | 8 | 7 | 6 | 5 | 4 | 4 | — |
| | | 68 (14) | 8 | 8 | 8 | 8 | 7 | 6 | 5 | 4 | 4 | — |
| | 600S162 | 33 (20) | 8 | 8 | 8 | 7 | 6 | 5 | 4 | — | — | — |
| | | 43 (18) | 8 | 8 | 8 | 8 | 8 | 7 | 6 | 5 | 5 | 4 |
| | | 54 (16) | 8 | 8 | 8 | 8 | 8 | 8 | 7 | 6 | 6 | 5 |
| | | 68 (14) | 8 | 8 | 8 | 8 | 8 | 8 | 7 | 6 | 6 | 5 |
| | 600S200 | 33 (20) | 8 | 8 | 7 | 5 | 4 | — | — | — | — | — |
| | | 43 (18) | 8 | 8 | 8 | 8 | 6 | 5 | 4 | 4 | — | — |
| | | 54 (16) | 8 | 8 | 8 | 8 | 8 | 6 | 5 | 5 | 4 | 4 |
| | | 68 (14) | 8 | 8 | 8 | 8 | 8 | 6 | 5 | 5 | 4 | 4 |
| 24 | 362S162 | 33 (20) | 8 | 8 | 6 | 4 | — | — | — | — | — | — |
| | | 43 (18) | 8 | 8 | 8 | 6 | 5 | 4 | — | — | — | — |
| | | 54 (16) | 8 | 8 | 8 | 7 | 6 | 5 | 4 | — | — | — |
| | | 68 (14) | 8 | 8 | 8 | 7 | 6 | 5 | 4 | — | — | — |
| | 362S200 | 33 (20) | 8 | 7 | 5 | — | — | — | — | — | — | — |
| | | 43 (18) | 8 | 8 | 6 | 5 | 4 | — | — | — | — | — |
| | | 54 (16) | 8 | 8 | 7 | 5 | 4 | — | — | — | — | — |
| | | 68 (14) | 8 | 8 | 7 | 5 | 4 | — | — | — | — | — |
| | 600S162 | 33 (20) | 8 | 8 | 7 | 5 | 4 | — | — | — | — | — |
| | | 43 (18) | 8 | 8 | 8 | 7 | 6 | 5 | 4 | — | — | — |
| | | 54 (16) | 8 | 8 | 8 | 8 | 7 | 6 | 5 | 4 | 4 | — |
| | | 68 (14) | 8 | 8 | 8 | 8 | 7 | 6 | 5 | 4 | 4 | — |
| | 600S200 | 33 (20) | 8 | 7 | 5 | — | — | — | — | — | — | — |
| | | 43 (18) | 8 | 8 | 7 | 5 | 4 | — | — | — | — | — |
| | | 54 (16) | 8 | 8 | 8 | 6 | 5 | 4 | — | — | — | — |
| | | 68 (14) | 8 | 8 | 8 | 6 | 5 | 4 | — | — | — | — |

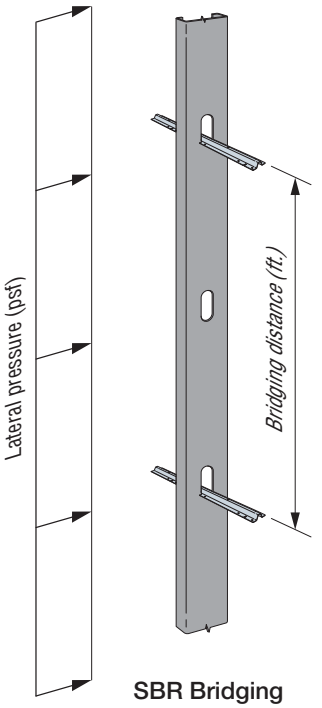


**SBR Bridging Distance**
*(DBR similar)*

1. Tabulated solutions are for ASD lateral pressure. Contact Simpson Strong-Tie for LRFD solutions.
2. Lateral pressures shall be determined based on the load combinations of the applicable building code. For designs in accordance with the 2009 IBC and earlier, wind pressures are at the working stress level and may be used directly. For designs in accordance with the 2012 and 2015 IBC, wind pressures are at the strength level and must be multiplied by 0.6 for ASD load combinations.
3. Tabulated values are based on the minimum of the tested connection strength and the calculated SBR/DBR member strength. Studs must be checked separately for unbraced length.

C-CF-2020 ©2020 SIMPSON STRONG-TIE COMPANY INC.

# **SBR/DBR** Spacer Bracers





## DBR/30 Maximum Bridging Distance (ft.)

| Stud Spacing (in.) | Stud Section | Stud Thickness mils (ga.) | Lateral Stud Pressure (psf) | |
|---|---|---|---|---|
| | | | 5 | 10 |
| 12 | 362S125 | 15 (25 EQ) | 8 | 5 |
| | | 18 (25) | 8 | 5 |
| | | 19 (20 EQ) | 8 | 5 |
| | | 30 (20 DW) | 8 | 5 |
| | | 33 (20 STR) | 8 | 5 |
| | 600S125 | 15 (25 EQ) | 8 | 6 |
| | | 18 (25) | 8 | 6 |
| | | 19 (20 EQ) | 8 | 6 |
| | | 30 (20 DW) | 8 | 6 |
| | | 33 (20 STR) | 8 | 6 |
| 16 | 362S125 | 15 (25 EQ) | 7 | — |
| | | 18 (25) | 7 | — |
| | | 19 (20 EQ) | 7 | — |
| | | 30 (20 DW) | 7 | — |
| | | 33 (20 STR) | 7 | — |
| | 600S125 | 15 (25 EQ) | 8 | 4 |
| | | 18 (25) | 8 | 4 |
| | | 19 (20 EQ) | 8 | 4 |
| | | 30 (20 DW) | 8 | 4 |
| | | 33 (20 STR) | 8 | 4 |
| 24 | 362S125 | 15 (25 EQ) | 4 | — |
| | | 18 (25) | 4 | — |
| | | 19 (20 EQ) | 4 | — |
| | | 30 (20 DW) | 4 | — |
| | | 33 (20 STR) | 4 | — |
| | 600S125 | 15 (25 EQ) | 4 | — |
| | | 18 (25) | 4 | — |
| | | 19 (20 EQ) | 4 | — |
| | | 30 (20 DW) | 5 | — |
| | | 33 (20 STR) | 5 | — |

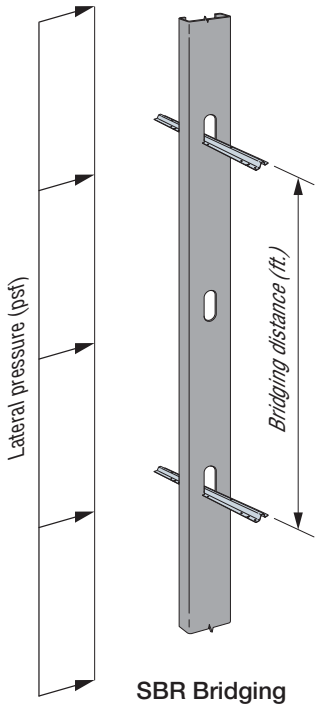


**SBR Bridging Distance**
*(DBR similar)*

1. Tabulated solutions are for ASD lateral pressure. Contact Simpson Strong-Tie for LRFD solutions.
2. Lateral pressures shall be determined based on the load combinations of the applicable building code. For designs in accordance with the 2009 IBC and earlier, wind pressures are at the working stress level and may be used directly. For designs in accordance with the 2012 and 2015 IBC, wind pressures are at the strength level and must be multiplied by 0.6 for ASD load combinations.
3. Tabulated values are based on the minimum of the tested connection strength and the calculated SBR/DBR member strength. Studs must be checked separately for unbraced length.

C-CF-2020 ©2020 SIMPSON STRONG-TIE COMPANY INC.

# **SBR** Spacer Bracer



## Given

- 2015 IBC (ASCE 7-10 and AISI S100-2012)
- 600S162-54 (50 ksi) studs at 24" o.c., 10'-stud height
  - Mid-point bracing (5' o.c.)
  - Distance from shear center to mid-plane of web, m = 0.663". (2013 AISI Manual, Table I-2)
- Wind design pressure = 34 psf
- $P_{ra}$ = Required ASD axial load = 3,000 lb.

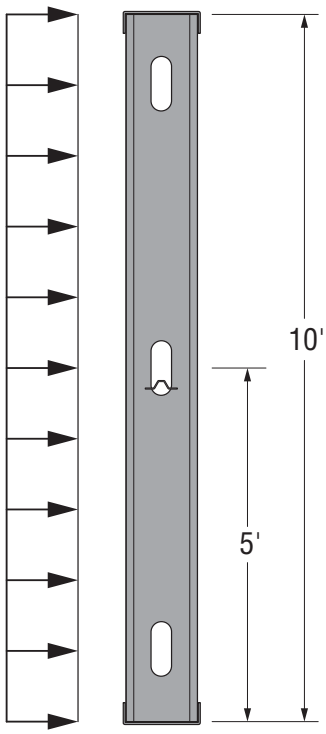


## Axially Loaded Stud

Required brace strength (AISI S100, Eq. D3.3-1)
$P_{rb} = 0.01P_{ra}$ = (0.01)(3,000 lb.) = 30 lb.

Required brace stiffness (AISI S100, Eq. D3.3-2a)
$\beta_{rb} = (2[4-(2/n)]/L_b)(\Omega P_{ra}) = (2[4-(2/1)]/60)(2)(3,000)$ = 400 lb./in.

Check connection strength and stiffness from Strength and Stiffness table (p. 130) for the SBR/43 for 6"-deep, 54-mil studs

➡ Allowable brace strength = 450 lb. > 30 lb. **OK**
➡ Allowable brace stiffness = 840 lb./in. > 400 lb./in. **OK**

Check member strength from Allowable Strengths table (p. 130) for the SBR/43 for 24" o.c.

➡ $P_a$ (24" o.c.) = Allowable member strength = 618 lb. > 30 lb. **OK**

**Note:** Member stiffness and the effects of accumulated load for multiple axially loaded studs have not been accounted for in the above calculations. Reference CFSEI Tech Note W400-16 for additional guidance on these topics.

## Laterally Loaded Stud

ASD Design load tributary to brace:
W = (0.6)(34 psf)(2 ft.)(5 ft.) = 204 lb.

**Note:** 2015 IBC load combinations for ASD include a factor of 0.6

Required flange force (AISI S100 Eq. D3.2.1-3)
$P_{L1} = -P_{L2} = 1.5(m/d)W$ = (1.5)(0.663 in./6 in.)(204 lb.) = 33.8 lb.

Torsional moment
$M_z = P_{L1}d = -P_{L2}d$ = (33.8)(6) = 202.8 in.-lb.

Moment applied to bridging member
$M_m = 0.64M_z$ = (0.64)(202.8) = 129.8 in.-lb.

**Note:** The 0.64 factor is from an analysis of a five-span continuous beam that is loaded with equal support moments (Reference AISI Design Guide D110-07, pp. 2–9, Figure 2-6)

Check connection strength from Strength and Stiffness table (p. 130) for the SBR/43 for 6"-deep, 54-mil studs
➡ Allowable torsional moment = 365 in.-lb. > 202.8 in.-lb. **OK**

Check member strength from Allowable Strengths table (p. 130) for the SBR/43 for 24" o.c.
➡ $M_a$ (24" o.c.) = Allowable moment = 360 in.-lb. > 129.8 in.-lb. **OK**

## Combined-Loading Check of Connection

($P_{br}$/Allowable brace strength) + ($M_z$/Allowable torsional moment) ≤ 1.0
(30 lb./450 lb.) + (202.8 in.-lb./365 in.-lb.) = 0.62 < 1.0 **OK**

## Combined-Loading Check of Bridging Member

Reference AISI Eqs. C5.2.1-1, C5.2.1-2, or Eq. C52.1-3 as applicable. For this condition, Eq. C5.2.1-3 applies.

$$\frac{\Omega_c P}{P_n} + \frac{\Omega_b M}{M_n} \leq 1.0$$

$$P_n = 2P_a \qquad M_n = 2M_a$$

$$\frac{1.8\ (30)}{2\ (618)} + \frac{1.67\ (129.8)}{2\ (360)} = 0.34 < 1.0 \textbf{ OK}$$

**Note:** The allowable strengths given in the Allowable Strengths table (p. 130) have been converted to nominal strengths by multiplying by Ω = 2.0.

C-CF-2020 ©2020 SIMPSON STRONG-TIE COMPANY INC.

## SFC/SSC Connectors – U-Channel Bridging Allowable Loads

| Model No. | Connector Material Thickness mil (ga.) | Clip Length (in.) | Stud Depth (in.) | Stud Thickness mil (ga.) | Fasteners[1,5] | | Laterally Loaded C-Stud | Axially Loaded C-Stud | | Code Ref. |
|---|---|---|---|---|---|---|---|---|---|---|
| | | | | | Stud | Bridging | Allowable Torsional Moment[2] (in.-lb.) | Allowable Brace Strength[2, 3] (lb.) | Brace Stiffness[4] (lb./in.) | |
| SFC4.25 | 54 (16) | 4¼ | 6 | 33 (20) | (2) #10 | (2) #10 | 275 | 125 | 860 | IBC |
| | | | | 43 (18) | (2) #10 | (2) #10 | 510 | 190 | 1,220 | |
| | | | | 54 (16) | (2) #10 | (2) #10 | 645 | 280 | 2,045 | |
| LSSC4.25 | 54 (16) | 4¼ | 6 | 54 (16) | (2) #10 | (2) #10 | 1,085 | 180 | 165 | |
| SSC4.25 | 68 (14) | 4¼ | 6 | 54 (16) | (2) #10 | (2) #10 | 655 | 280 | 2,045 | |
| | | | | 68 (14) | (2) #10 | (2) #10 | 805 | 335 | 2,305 | |
| | | | | 97 (12) | (2) #10 | (2) #10 | 920 | 660 | 4,230 | |
| LSSC6.25 | 54 (16) | 6¼ | 8, 10, 12 | 54 (16) | (2) #10 | (2) #10 | 1,085 | 180 | 685 | |

1. See illustrations for fastener placement.
2. Allowable loads are for use when utilizing Allowable Stress Design methodology. For LRFD loads, multiply the tabulated ASD values by 1.6.
3. Allowable brace strengths are based on ultimate test load divided by a safety factor. Serviceability limit is not considered, as brace stiffness requirements are given in Section D3.3 of AISI S100. Contact Simpson Strong-Tie if nominal brace strength is required.
4. Tabulated stiffness values apply to both ASD and LRFD designs.
5. See *Fastening Systems* catalog (C-F-2019) on **strongtie.com** for more information on Simpson Strong-Tie fasteners.

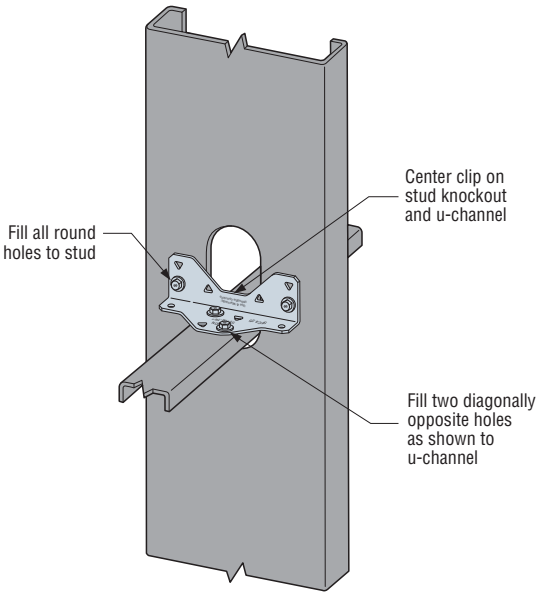


**Typical SFC4.25 Installation**

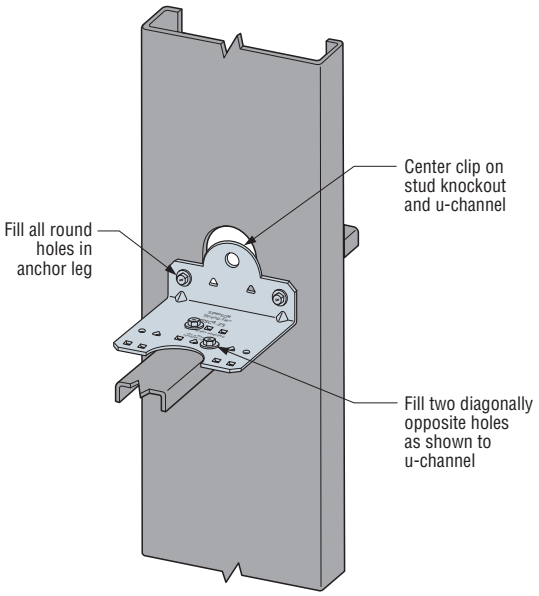


**Typical SSC4.25 Installation**

C-CF-2020 ©2020 SIMPSON STRONG-TIE COMPANY INC.

# **DBC** Drywall Bridging Connector



## Work smarter, not harder

Patented design allows for one- or two-screw installation of the DBC, significantly reducing labor and material cost. The first and only connector load rated for ¾" u-channel, the DBC joins the SUBH line of bridging connectors tested as a system, ensuring that published design capacities capture the influence of stud web depth and thickness.

**Features:**

- Most applications require only a single screw
- Designed for ¾" u-channel to fit smaller web knockouts common to drywall studs
- Compatible with drywall stud depths of 3⅝" and 6" with 1½" wide knockouts

VALUE ENGINEERED

*This product is preferable to similar connectors because of a) easier installation, b) higher loads, c) lower installed cost, or a combination of these features.*

**DBC2.5**
US Patents
8,813,456 and 8,590,255

**Material:** 33 mil (20 ga.) carbon steel

**Finish:** Galvanized (G90)

**Installation:**

- With ¾" x 54 mil (16 ga.) u-channel installed through the stud web knockouts, insert the DBC2.5 through the knockout so that the DBC slots engage the stud web and the DBC flanges engage the u-channel as shown in the illustration
- Use the specified number of #8 screws to fasten the DBC to the u-channel

**Codes:** See p. 11 for Code Reference Key Chart

**Ordering Information:** DBC2.5-R200 (Bucket of 200)

C-CF-2020 ©2020 SIMPSON STRONG-TIE COMPANY INC.

# **DBC** Drywall Bridging Connector





## DBC — Bridging Connector Strength Allowable Loads

| Model No. | Stud Depth | Stud Thickness and Yield Strength | | | Fasteners | | Laterally Loaded C-Stud Allowable Torsional Moment (in. - lb.) | Code Ref. |
|---|---|---|---|---|---|---|---|---|
| | | Mil | Gauge[3] | Fy (ksi) | | | | |
| DBC2.5 | 3⅝ | 15 | 25 EQ. | 50 | Min. | (1) #8 | 65 | — |
| | | 18 | 25 | 33 | | | | |
| | | 19 | 20 EQ. | 65 | | | | |
| | | 20 | 20 EQ. | 57 | | | | |
| | | 30 | 20 DW | 33 | Min. | (1) #8 | 85 | |
| | | | | | Max. | (2) #8 | 125 | |
| | | 33 | 20 STR | 33 | Min. | (1) #8 | 85 | |
| | | | | | Max. | (2) #8 | 125 | |
| | 6 | 15 | 25 EQ. | 50 | Min. | (1) #8 | 65 | |
| | | 18 | 25 | 33 | | | | |
| | | 19 | 20 EQ. | 65 | | | | |
| | | 21 | 20 EQ. | 57 | | | | |
| | | 30 | 20 DW | 33 | Min. | (1) #8 | 85 | |
| | | | | | Max. | (2) #8 | 125 | |
| | | 33 | 20 STR | 33 | Min. | (1) #8 | 85 | |
| | | | | | Max. | (2) #8 | 125 | |

1. Allowable loads are for use when utilizing Allowable Stress Design methodology. For LRFD loads, multiply the ASD tabulated values by 1.6.
2. Min. fastener quantity and tabulated values — fill round hole (one screw total); Max. fastener quantity and tabulated values — fill round and triangle holes (two screws total).
3. EQ — equivalent, DW — drywall, STR — structural.

## Design Example

### Given

- 600S125–18 (33 ksi) studs at 24" o.c., 10' tall
  Mid-point bracing (5' o.c.)
  Distance from shear center to mid-plane of web, m = 0.408 in.
  (SFIA Technical Guide Version 2018)
- Lateral load = 5 psf

### Laterally-Loaded Stud Design

ASD Design load tributary to brace:

$W = (5\ psf)(2\ ft.)(5\ ft.) = 50\ lb.$

Required bracing force (AISI S100 Eq. D3.2.1-3):

$P_{L1} = -P_{L2} = 1.5(m/d)W = (1.5)(0.408\ in./6\ in.)(50\ lb.) = 5.1\ lb.$

Torsional moment:

$M_Z = P_{L1}d = -P_{L2}d = (5.1\ lb.)(6\ in.) = 30.6\ in.\text{-}\ lb.$

From Allowable Loads table above, for 6"–18 mil stud:

➡ Select DBC2.5 with Min. fasteners ((1) #8)
Allowable torsional moment = 65 in.- lb. > 30.6 in.- lb. **OK**

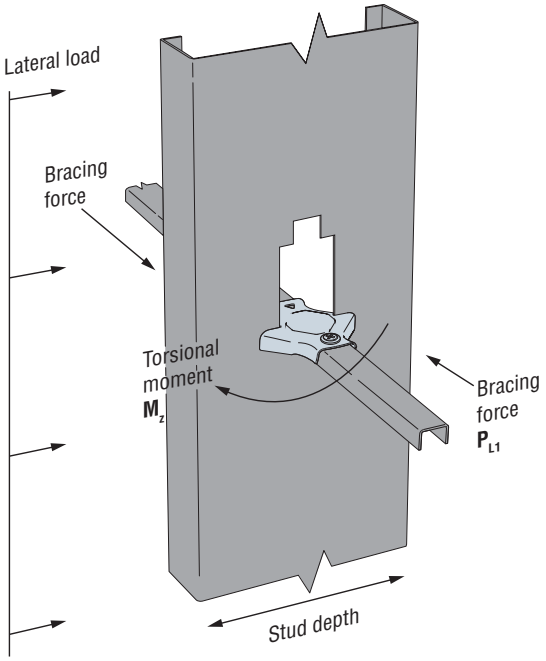


Laterally Loaded C-Stud

C-CF-2020 ©2020 SIMPSON STRONG-TIE COMPANY INC.

# **CS** Coiled Strap



CS coiled utility straps are an ideal solution when it is desired to brace wall studs via the flanges with strap. These products are packaged in lightweight (about 40 pounds) cartons and can be cut to length on the job site.

**Materials:** See table.

**Finish:** Galvanized (G90); ZMAX®

**Installation:**

- Use all specified fasteners; see General Notes.
- Refer to the applicable code for minimum edge and end distance.
- The table shows the maximum allowable loads and the screws required to obtain them. See footnote #1. Fewer screws may be used as given by footnote #3.

**Codes:** See p. 11 for Code Reference Key Chart

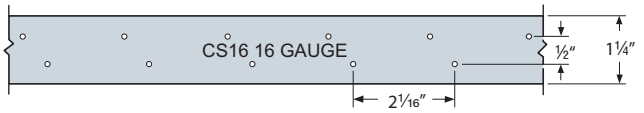


**CS16 Hole Pattern**
*(all other CS straps similar)*

| Model No. | Total Length (ft.) | Connector Material Thickness mil (ga.) | Width (in.) | Fasteners (At Blocking)[4] Framing Thickness mil (ga.) 33 (20) | 43 (18) | 54 (16) | Allowable Tension Load (lb.) | Code Ref. |
|---|---|---|---|---|---|---|---|---|
| CS16 | 150 | 54 (16) | 1¼ | (9) #10 | (6) #10 | (4) #10 | 1,550 | IBC, FL, LA |
| CS20 | 250 | 33 (20) | 1¼ | (6) #10 | (4) #10 | (3) #10 | 945 | |

These products are available with additional corrosion protection. Additional products on this page may also be available with this option. Check with Simpson Strong-Tie for details.

1. In order to achieve the tabulated loads in the strap, attach each strap to the blocking with the tabulated number of screws.
2. Strap length at blocking to achieve tabulated load = number of tabulated screws + 1".
3. Calculate the strap value for a reduced number of screws to the blocking as follows:

$$\text{Allowable Load} = \frac{\text{No. of Screws Used}}{\text{No. of Screws in Table}} \times \text{Table Load.}$$

4. See *Fastening Systems* catalog (C-F-2019) on **strongtie.com** for more information on Simpson Strong-Tie fasteners.

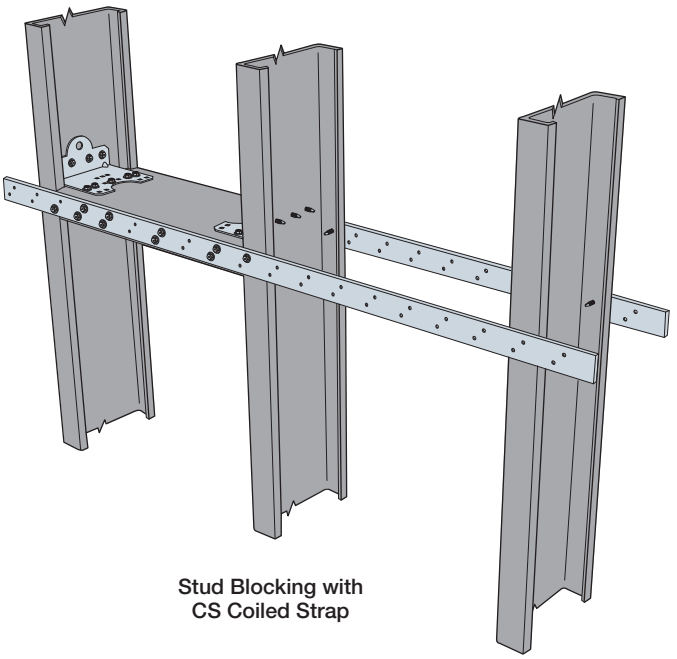

**Stud Blocking with CS Coiled Strap**

C-CF-2020 ©2020 SIMPSON STRONG-TIE COMPANY INC.

# **LTB** Bridging



LTB bridging connectors are a cost-effective solution for bracing between non-load-bearing wall studs when compared with field fabricated blocking and clip angles.

**Material:** 27 mil (22 ga.)

**Finish:** Galvanized (G90)

**Installation:**

- Use (2) #10 screws at each end
- The LTB can be utilized with 3⅝", 6", 8", and 10" studs at 16" o.c.
- LTB works only in tension, so must be used in cross pairs
- Install bridging tightly; loose installation may allow stud movement

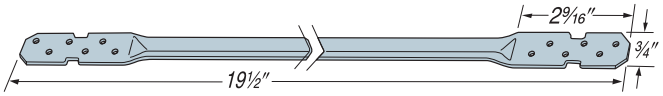


LTB20

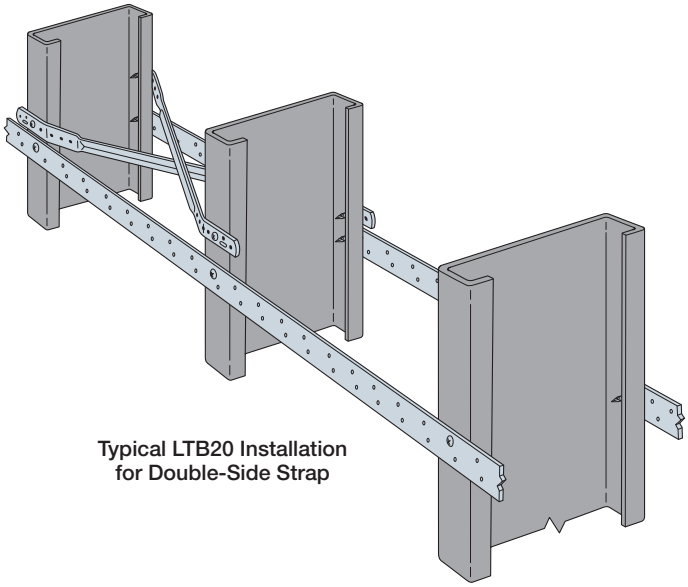

Typical LTB20 Installation for Double-Side Strap

C-CF-2020 ©2020 SIMPSON STRONG-TIE COMPANY INC.

# Curved Hand-Bendable Framing

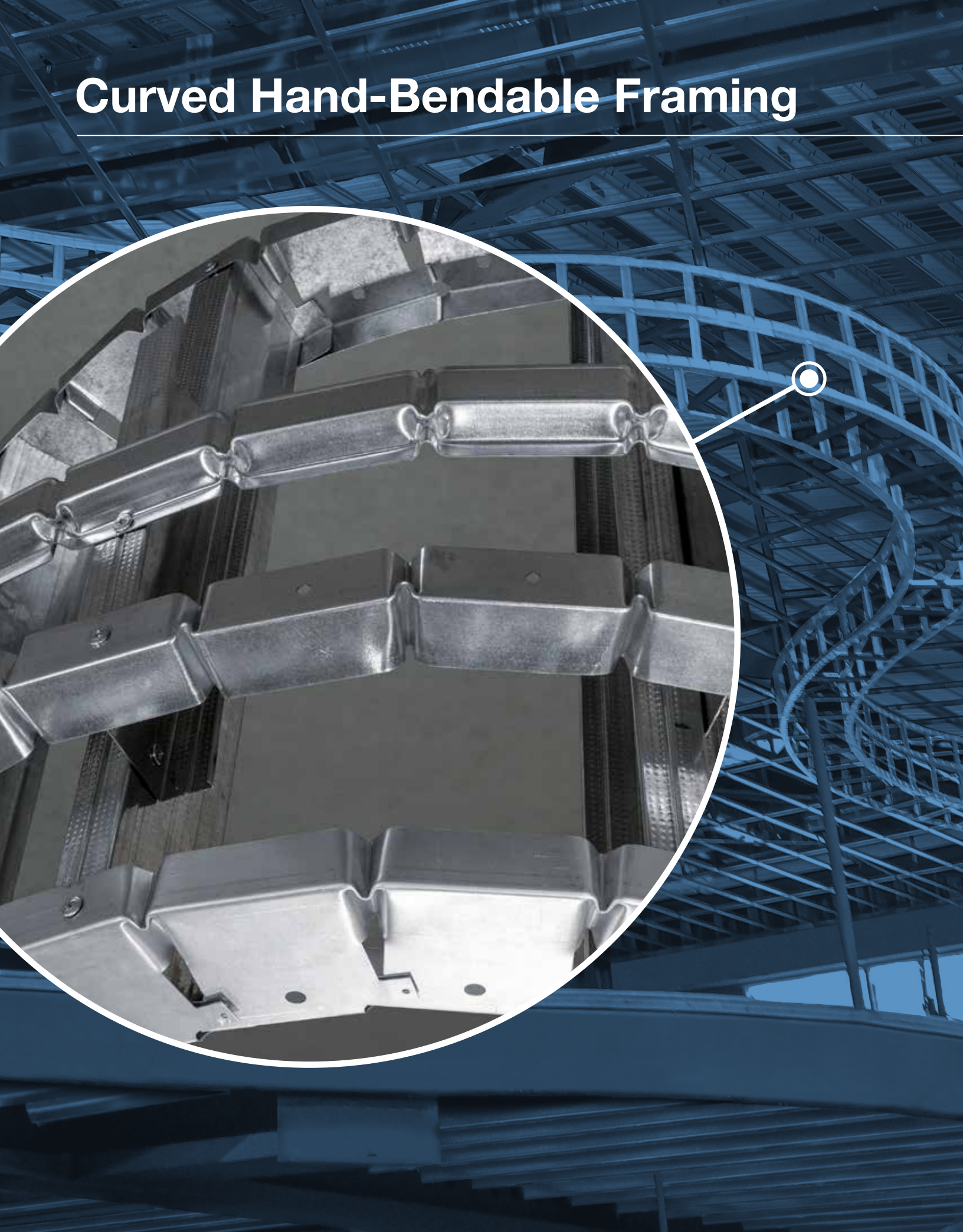

# **Ready-Track**® Framing

Ready-Track framing is the fast and dependable way to frame curved walls on the jobsite. Simple to bend into smooth curves, it holds its shape without fasteners for easy positioning and installation.

- Ideal for curved walls, stairwells, soffits, clouds and complicated compound radiuses
- Handles almost any application when you need material curved along the flange
- Screw holes in the bottom web allow the top-track radius to be locked down for easy replication, once fitted over the bottom track
- Optional screw holes in the leg allow the radius to be easily locked down from the side

## Product Information

| Model No. | Track Width (in.) | Length (ft.) | Quantity per Bundle* |
|---|---|---|---|
| 20 Gauge (30 mil) | | | |
| RT250-8 | 2½ | 8 | 12 |
| RT250-10 | 2½ | 10 | 10 |
| RT350-8 | 3½ | 8 | 12 |
| RT362-8 | 3⅝ | 8 | 12 |
| RT362-10 | 3⅝ | 10 | 10 |
| RT400-8 | 4 | 8 | 6 |
| RT400-10 | 4 | 10 | 10 |
| RT550-8 | 5½ | 8 | 6 |
| RT600-8 | 6 | 8 | 6 |
| RT600-10 | 6 | 10 | 10 |
| 18 Gauge (43 mil) | | | |
| RT362-8-18 | 3⅝ | 8 | 12 |
| RT362-10-18 | 3⅝ | 10 | 10 |
| RT600-8-18 | 6 | 8 | 6 |
| RT600-10-18 | 6 | 10 | 10 |

*Product is shipped in bundled, straight sections.

VALUE ENGINEERED

***This product is preferable to similar connectors because of a) easier installation, b) higher loads, c) lower installed cost, or a combination of these features.***

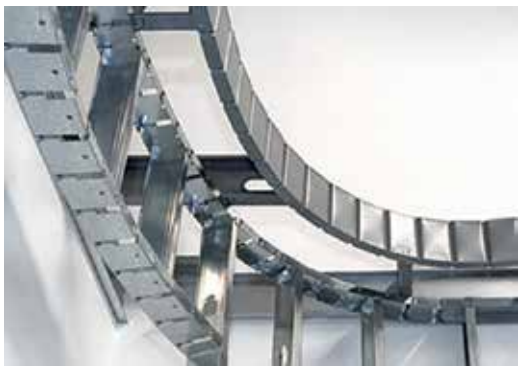

Typical Ready-Track Installation

# **Ready-Arch**® Framing

VALUE ENGINEERED

***This product is preferable to similar connectors because of a) easier installation, b) higher loads, c) lower installed cost, or a combination of these features.***

Creating arched openings and designs is simpler than ever with Ready-Arch framing members. Round, elliptical or s-shapes are all easy to form on the jobsite without any cutting or additional reinforcement. Ready-Arch members are also ideal for more challenging applications where material needs to curve along the web.

- Ideal for soffits, arches, light coves and elliptical or eyebrow curves for windows and doorways
- 20-gauge (30 mil) steel holds its shape without any fasteners
- Installs to cold-formed steel or wood framing

## Product Information

| Model No. | Width (in.) | Length (ft.) | Quantity per Bundle* |
|---|---|---|---|
| RA362-8 | 3⅝ | 8 | 10 |
| RA600-8 | 6 | 8 | 6 |

*Product is shipped in bundled, straight sections.

Typical Ready-Arch Installation



C-CF-2020 ©2020 SIMPSON STRONG-TIE COMPANY INC.

# **Ready-Hat**® Framing

***This product is preferable to similar connectors because of a) easier installation, b) higher loads, c) lower installed cost, or a combination of these features.***

Whether the plans call for framing over a CMU wall or concrete column or just a curved transition from wall to ceiling, the Ready-Hat furring and framing channel is right for the job. This versatile product is easy to form by hand into the exact shape needed and is secured to concrete or CMU walls with powder-driven fasteners or concrete screws.

- Ideal for furring on curved walls or to create coves, barrel vaults, groin vaults, soffits and serpentine ceilings
- Great for wrapping columns or as cross-framing to eliminate drywall butt joints
- 20-gauge (33 mil) steel holds its shape once formed and positioned for easy fastening

Typical Ready-Hat Installation

## Product Information

| Model No. | Channel Height (in.) | Overall Width (in.) | Length (ft.) | Quantity per Bundle* |
|---|---|---|---|---|
| RH087-10 | ⅞ | 2½ | 10 | 10 |

*Product is shipped in bundled, straight sections.

# **Ready-Angle**® Framing

***This product is preferable to similar connectors because of a) easier installation, b) higher loads, c) lower installed cost, or a combination of these features.***

Ready-Angle framing angle adapts to almost any shape, and curves in multiple directions, so it's easy to form challenging compound curves and s-bends. Use two pieces to replicate curved track for steel and wood studs, to form arches of any depth quickly, or to produce finished corners that are ready for drywall.

- Ideal for s-shapes, spirals, sweeps or virtually any free-form shape
- 20-gauge (30 mil) steel holds its shape without any fasteners
- A versatile product for problem-solving on the jobsite

Typical Ready-Angle Installation

## Product Information

| Model No. | Angle Leg (in.) | Length (ft.) | Quantity per Bundle* |
|---|---|---|---|
| RL150-8 | 1½ | 8 | 12 |
| RL150-10 | 1½ | 10 | 10 |

*Product is shipped in bundled, straight sections.

C-CF-2020 ©2020 SIMPSON STRONG-TIE COMPANY INC.

# **Ready Track Bender**™ Custom Framing Tool

The Ready Track Bender is a portable, on-the-jobsite tool that bends studs and track easily, accurately and conveniently by creating compound indentations at consistent intervals along the length of the material.

- Spaces indentations as close as 2" apart for a tight radius, and up to 12" or more apart for a larger radius
- Forms all standard stud and track profiles up to 20-gauge thick and 6" wide
- No flange or web cutting to form radius and no plywood or strap repair needed for strength
- Reliable and precise — turn the dial to the desired radius and create uniform bends in piece after piece, all day long
- Tough heavy-gauge steel construction throughout for smooth, trouble-free operation job after job
- Rugged plastic case for easy transportation

## Minimum Bend Radius

| Track/Stud Width (in.) | Approx. Min. Radius (in.) | Bend Spacing (in.) |
|---|---|---|
| 2½ | 13 | 2 |
| 3½ – 4 | 19 | 2 |
| 5½ – 6 | 27 | 2 |

### Models and Capabilities

**S150 Standard Tool**

- Bends 20-gauge and 25-gauge steel
- Forms track or studs 2½" to 6" wide
- Leg length up to 1⅝" high

**D150 Deluxe Tool**

- Bends 20-gauge and 25-gauge steel
- Forms track or studs 2½" to 6" wide
- Leg length up to 3" high

# **Ready Trim Bender**™ Custom Framing Tool

The Ready Trim Bender allows the user to bend angles quickly, accurately and conveniently right on the jobsite by creating compound indentations at consistent intervals along the length of the angle. It eliminates the need for old-fashioned tin snips and the trial-and-error method of approximating the right radius.

- Consistently forms the exact radius you need
- Tough heavy-gauge steel construction assures a smooth, trouble-free operation job after job
- Great for 20-gauge to 25-gauge angles with 1½" x 1½", 2" x 2" or 3" x 3" legs
- Minimum radius is 30"–44"

**Ready Trim Bender — Model No. AB200**

To learn more about how Simpson Strong-Tie can make your curved CFS wall and ceiling framing jobs faster and easier, visit **strongtie.com/cfs.**



C-CF-2020 ©2020 SIMPSON STRONG-TIE COMPANY INC.

# Concrete Connectors

# **AnchorMate®** Anchor Bolt Holders

The reusable AnchorMate anchor bolt holder is designed to hold the anchor in place before the concrete pour, as required in some jurisdictions. The gripping section secures the bolt in place without a nut for quicker setup and teardown. It also protects the threads from wet concrete and simplifies trowel finishing.

**Features:**

- Built-in 2x4 and 2x6 stops eliminate measuring.
- Color coded for easy size identification.
- Use the ⅝" and ⅞" AnchorMate to secure the SSTB to the formboard before the concrete pour. Alignment arrows (left or right) match the SSTB bolt head arrow.

**Material:** Nylon

**Codes:** See p. 11 for Code Reference Key Chart

| Model No. | Diameter (in.) | Color | Code Ref. |
|---|---|---|---|
| AM½ | ½ | Yellow | — |
| AM⅝ | ⅝ | Blue | |
| AM¾ | ¾ | Red | |
| AM⅞ | ⅞ | Green | |
| AM1 | 1 | Black | |

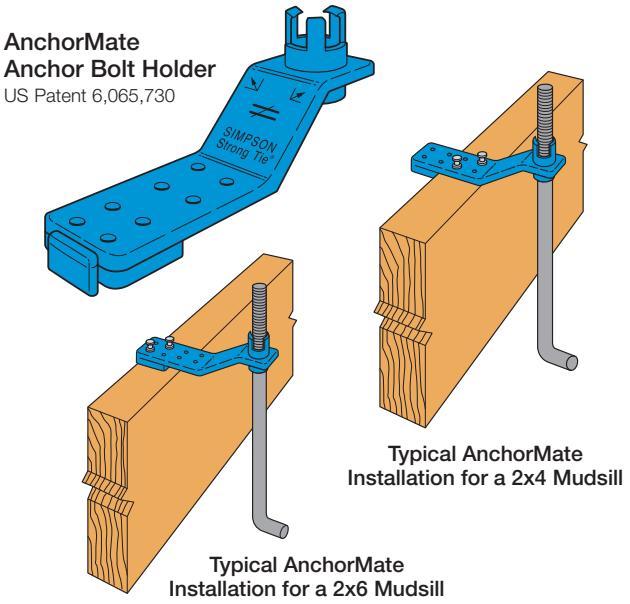


**AnchorMate Anchor Bolt Holder**
US Patent 6,065,730

**Typical AnchorMate Installation for a 2x4 Mudsill**

**Typical AnchorMate Installation for a 2x6 Mudsill**

# **ABS** Anchor Bolt Stabilizer

The ABS stabilizes the anchor bolt to prevent it from being pushed against the form during the concrete pour.

**Features:**

- Supports the bolt approximately 8" below the top of the concrete
- Model ABS⅝ is for the ⅝" SSTB and ABS⅞ is for the ⅞" SSTB
- Thin section limits the effect of a cold joint
- Sized for 2x4 and 2x6 mudsills

**Material:** Engineered Composite Plastic

**Codes:** See p. 11 for Code Reference Key Chart

| Model No. | Diameter (in.) | Color | Code Ref. |
|---|---|---|---|
| ABS⅝ | ⅝ | Blue | — |
| ABS⅞ | ⅞ | Green | |

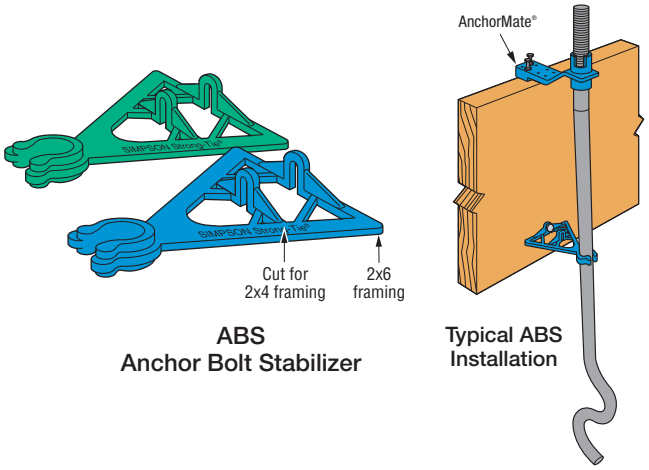


**ABS Anchor Bolt Stabilizer**

**Typical ABS Installation**

# **StrapMate®** Strap Holder

The StrapMate is designed to keep the STHD and LSTHD straps vertically aligned during the concrete pour to minimize possibility of spalling. The friction fit allows for quick and easy installation.

**Features:**

- The StrapMate is reusable
- Works with STHD, LSTHD

**Material:** Engineered Composite Plastic

- Designed to fit ¾" plywood forms up to 1¾" LVL forms and larger
- The strap is positioned off the front edge of the form board

**Codes:** See p. 11 for Code Reference Key Chart

| Model No. | Nails | Code Ref. |
|---|---|---|
| SM1 | (2) 8d duplex | — |

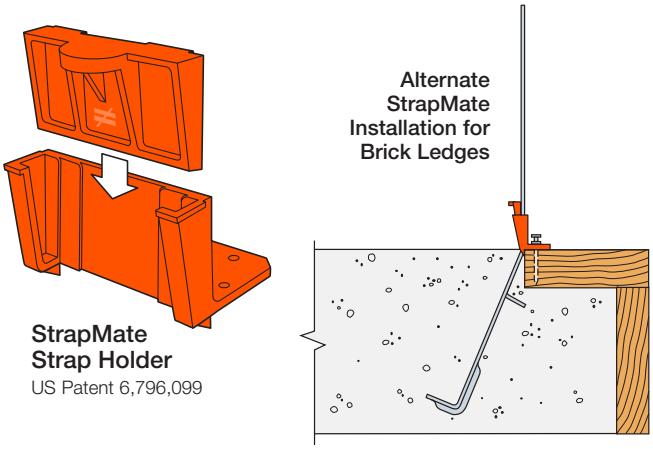

**StrapMate Strap Holder**
US Patent 6,796,099

**Alternate StrapMate Installation for Brick Ledges**



C-CF-2020 ©2020 SIMPSON STRONG-TIE COMPANY INC.

# **BP/LBP** Bearing Plates

Bearing plates give greater bearing surface than standard cut washers, and help distribute the load at these critical connections.

The BP½-3 and BP⅝-3 are 3" x 3" bearing plates that meet the latest requirements of the IRC and IBC. These plate washers are available uncoated or with a hot-dip galvanized (HDG) coating.

The BPS and LBPS are bearing plates that offer increased flexibility. The slotted hole allows for adjustability to account for bolts that are not in the middle of the track-bottom plate.

**Material:** See table

**Finish:** LBP, LBPS and BP5/8S — Galvanized;
BP7/8-2 and BP5/8S — Zinc Plated; BPS, BP — None.
BPs and BPSs may be ordered HDG;
LBP and LBPS products may be ordered ZMAX®; contact Simpson Strong-Tie. Refer to pp. 17–19 for Corrosion Information.

**Installation:**

- See General Notes on pp. 13–15.
- BP/BPS — For shearwall applications, position edge of plate washer within ½" of sheathed edge of track-bottom plate.

**Codes:** See p. 11 for Code Reference Key Chart

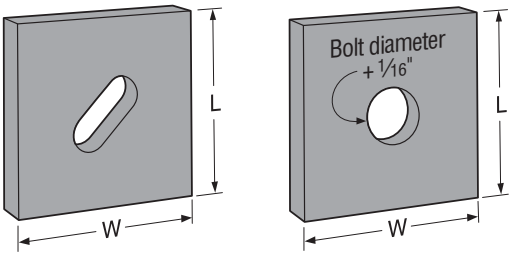


**BPS**
*(LBPS similar)*

**BP**
*(LBP similar)*

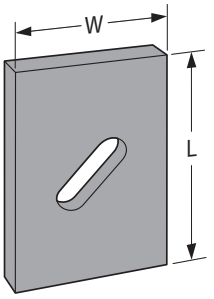


**BPS½-6**
*(other models similar)*

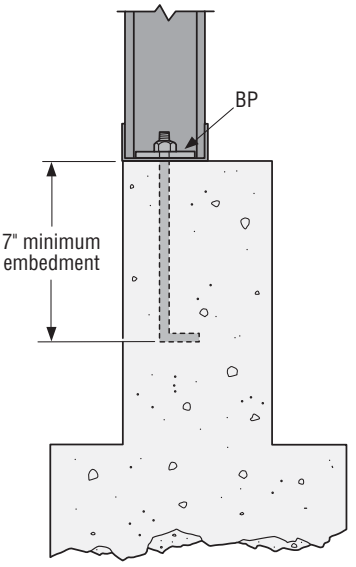


**Typical BP Installed with a Bottom Track Anchor Bolt**

| Bolt Dia. (in.) | Model No. | Thickness | Dimensions (in.) | | Code Ref. |
|---|---|---|---|---|---|
| | | | W | L | |
| ⅜ | BP3/8-2 | 3/16" | 2 | 2 | IBC, FL |
| ½ | LBP1/2 | 9/64" | 2 | 2 | — |
| | LBPS1/2 | 9/64" | 3 | 3 | |
| | BPS1/2-3 | 3 ga. | 3 | 3 | |
| | BPS1/2-6 | 3 ga. | 3 | 4½ | |
| | BP1/2 | 3/16" | 2 | 2 | |
| | BP1/2-3 | 3 ga. | 3 | 3 | IBC, FL |
| ⅝ | LBP5/8 | 9/64" | 2 | 2 | — |
| | LBPS5/8 | 9/64" | 3 | 3 | |
| | BPS5/8-3 | 3 ga. | 3 | 3 | |
| | BPS5/8-6 | 3 ga. | 3 | 4½ | |
| | BP5/8-2 | 3/16" | 2 | 2 | IBC, FL |
| | BP5/8 | ¼" | 2½ | 2½ | — |
| | BP5/8-3 | 3 ga. | 3 | 3 | IBC, FL |
| ¾ | BP3/4 | 5/16" | 2¾ | 2¾ | |
| | BP3/4-3 | 3 ga. | 3 | 3 | |
| | BPS3/4-3 | 3 ga. | 3 | 3 | — |
| | BPS3/4-6 | 3 ga. | 3 | 4½ | |
| ⅞ | BP7/8-2 | ⅜" | 1 15/16 | 2¼ | |
| | BP7/8 | 5/16" | 3 | 3 | |
| 1 | BP1 | ⅜" | 3½ | 3½ | |

These products are available with additional corrosion protection. Additional products on this page may also be available with this option. Check with Simpson Strong-Tie for details.

1. Standard cut washer required with BPS1/2-3, BPS5/8-3, BPS3/4-3, BPS1/2-6, BPS5/8-6 and BPS3/4-6 (not provided) per the 2015 IRC and 2015 SPDWS.



C-CF-2020 ©2020 SIMPSON STRONG-TIE COMPANY INC.

# **CNW** Coupler Nuts

Simpson Strong-Tie® coupler nuts are a tested and load-rated method to join threaded rod and anchor bolts. "Witness" holes in the nut provide a means to verify when rods are properly installed. The positive stop feature helps ensure even threading into each end of the nut. CNWs meet and exceed the specified minimum tensile capacity of corresponding ASTM A36 bolts and threaded rod. HSCNWs meet and exceed the specified minimum tensile capacity of corresponding ASTM A449 bolts and threaded rod. Contact Simpson Strong-Tie for other coupler nut sizes.

**Finish:** Zinc Plated

**Installation:**

- Tighten the two rods until each all-thread rod is visible in the witness hole. Any portion of the thread visible in the witness is a correct installation.
- Standard CNW for use with non-hot-dip galvanized all-thread rod only.
- ⅝" and ⅞" diameter couplers available with oversized threads for installation to hot-dip galvanized bolts (order CNW⅝-⅝OST and CNW⅞-⅞OST). Note that only one side is oversized to accommodate HDG rods and bolts.
- Some OST couplers are typically oversized on one end of the coupler nut only and will be marked with an "O" on the oversized side. Couplers may be oversized on both ends. Contact Simpson Strong-Tie.

**Codes:** See p. 11 for Code Reference Key Chart

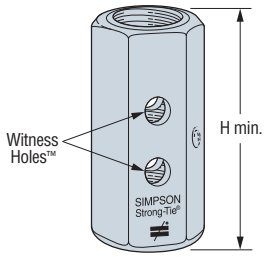


**CNW**
**Allows Fast Visual Check for Correct All Thread Rod Installation**

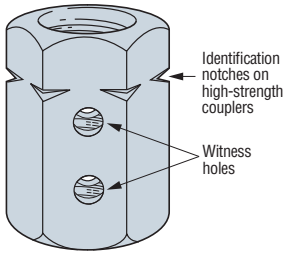


**HSCNW**
**High-Strength Coupler Nut**

**CNW**
**Transition Coupler Nut**

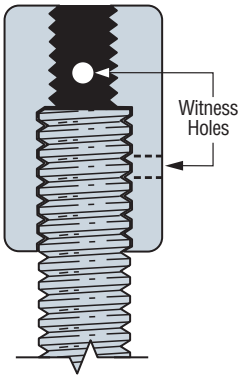


| Model No. | Rod Diameter (in.) | H Min. (in.) | Allowable Tension Capacity (lb.) (100) | Code Ref. |
|---|---|---|---|---|
| CNW½ | 0.500 | 1½ | 4,265 | IBC, FL |
| CNW⅝ | 0.625 | 1⅞ | 6,675 | |
| CNW¾ | 0.750 | 2¼ | 9,610 | |
| CNW⅞ | 0.875 | 2½ | 13,080 | — |
| CNW1 | 1.000 | 2¾ | 17,080 | |
| CNW1¼ | 1.250 | 3 | 26,690 | |
| HSCNW¾ | 0.750 | 2¼ | 19,880 | |
| HSCNW1 | 1.000 | 2¾ | 35,345 | |
| **Transition Couplers** | | | | |
| CNW⅝ -½ | 0.625 to 0.500 | 1½ | 4,265 | IBC, FL |
| CNW¾ -⅝ | 0.750 to 0.625 | 1¾ | 6,675 | |
| CNW⅞ -⅝ | 0.875 to 0.625 | 2 | 6,675 | — |
| CNW1-⅞ | 1.000 to 0.875 | 2¼ | 13,080 | |

1. Allowable loads shown are based on AISC 14th Edition A36 and A449 (HS) threaded rod capacities.

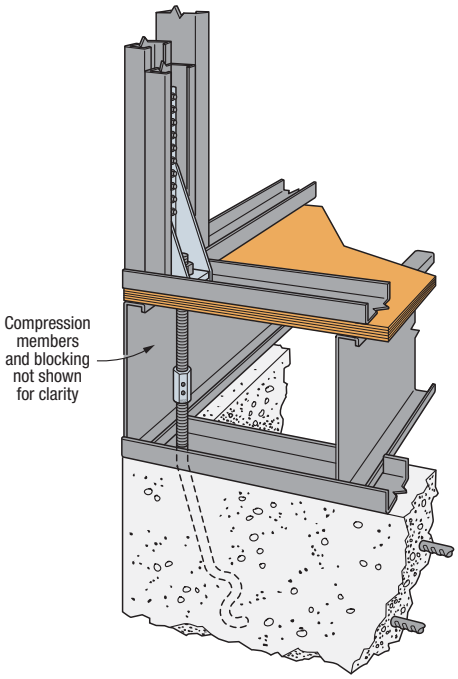


**Typical CNW Rim Joist Installation**



C-CF-2020 ©2020 SIMPSON STRONG-TIE COMPANY INC.

# **ABL** Anchor Bolt Locator

The ABL enables the accurate and secure placement of anchor bolts on concrete-deck forms prior to concrete placement. The structural heavy-hex nut is attached to a pre-formed steel "chair," which eliminates the need for an additional nut on the bottom of the anchor bolt. Electro-galvanized versions available for HDG anchor bolts. Order ABL-OST when using HDG anchor bolts.

**Features:**

- Designed for optimum concrete flow.
- Installed with nails or screws.
- Meets code requirement for 1" stand off. Also available with 1½" standoff. Order ABLXX-1.5.
- PAB anchors are not designed for use with the ABL. Contact Simpson Strong-Tie for pre-assembled anchor solutions to be used with ABL.

**Material:** Nut — Heavy hex; Chair — Steel

**Finish:** Nut — None or Electro-galvanized; Chair — G90; ABL-OST — HDG

**Codes:** See p. 11 for Code Reference Key Chart

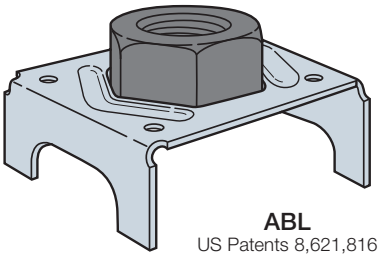

**ABL**
US Patents 8,621,816 and 8,381,482

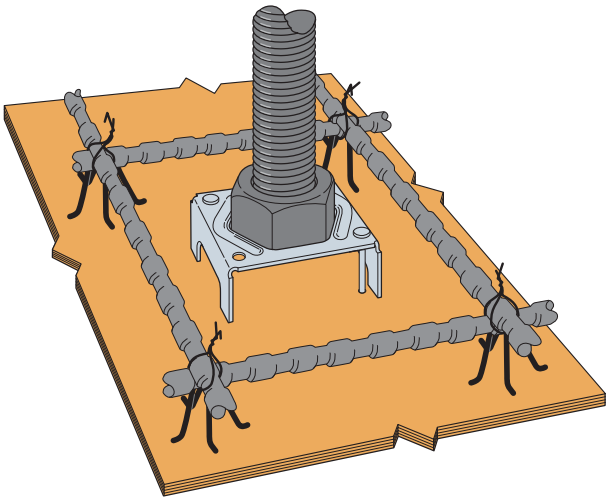

**Typical ABL Installation**

Please visit **strongtie.com** for ABL load ratings.

| Model No. | Anchor Bolt Diameter (in.) | Code Ref. |
|---|---|---|
| ABL4-1 | ½ | — |
| ABL5-1 | ⅝ | |
| ABL6-1 | ¾ | |
| ABL7-1 | ⅞ | |
| ABL8-1 | 1 | |
| ABL9-1 | 1⅛ | |
| ABL10-1 | 1¼ | |



C-CF-2020 ©2020 SIMPSON STRONG-TIE COMPANY INC.

# **MASA/MASAP** Mudsill Anchors

Mudsill anchors have always been a time-saving alternative to anchor bolts, and the MASA anchors provide even greater load-carrying capacity alternative. For ⅝" and ½" mudsill anchor bolts on bottom tracks, the MASA has load capacities that meet or exceed the parallel and perpendicular to plate shear capacity of other cast-in-place anchors. Two versions of the MASA are available — the standard MASA for installation on standard forms, and the MASAP for panelized forms.

The MASA and MASAP are code listed by ICC-ES under the 2006, 2009, 2012 and 2015 IBC® and IRC® and have been tested to meet the requirements of ICC-ES acceptance criteria AC-398 for cracked and uncracked concrete.

**Material:** 16 gauge

**Finish:** Galvanized, all available in ZMAX® coating. See Corrosion Information, pp. 17–19.

**Installation:**

- Use all specified fasteners; see General Notes
- **MASA/MASAP**
  - Concrete shall have a minimum $f'_C$ = 2,500 psi.
  - Spalling — Full loads apply for spalls up to a maximum height of 1¼" and a maximum depth of ⅞". Any exposed portion of the mudsill anchor must be protected against possible corrosion.
  - Minimum MASA end distance is 4" and minimum center-to-center spacing is 8" for a full load.
  - For continuous load path, MASA should be installed on the same side of the wall as uplift connectors.

**Codes:** See p. 11 for Code Reference Key Chart

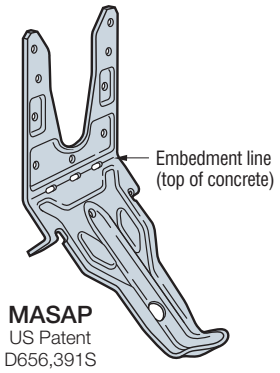


**MASAP**
US Patent
D656,391S

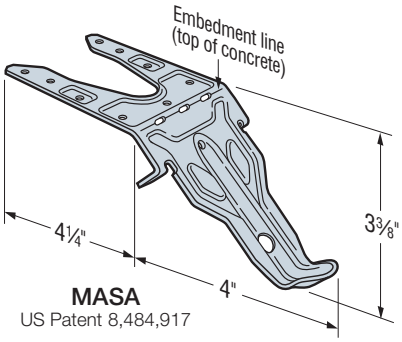


**MASA**
US Patent 8,484,917

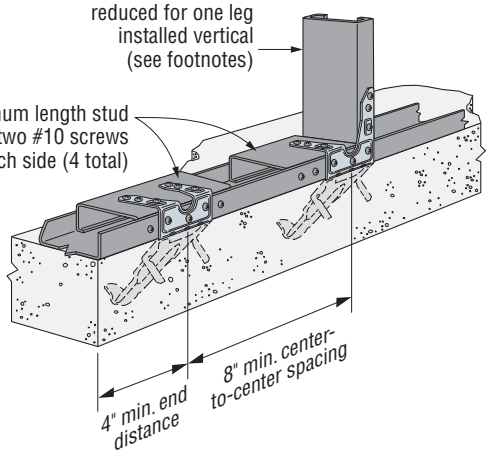


**Standard MASA/MASAP Installation on CFS Track**

## Allowable Loads for MASA/MASAP Cast-in-Place Mudsill Anchor on CFS Track

| Model No. | Fasteners[8] | | Allowable Load (lb.)[1,2,3,4,5] 43 mil (18 ga.) CFS | | | | | | Code Ref. |
|---|---|---|---|---|---|---|---|---|---|
| | | | Standard Installation | | | | | | |
| | | | Wind and SDC A&B[6] | | | SDC C–F | | | |
| | Sides | Top of Track | Uplift | Parallel to Track[7] | Perpendicular to Track | Uplift | Parallel to Track[7] | Perpendicular to Track | |
| MASA or MASAP | (3) #10 | (6) #10 | Non-Cracked | | | | | | IBC, FL, LA |
| | | | 645 | 1,155 | 855 | 565 | 1,010 | 750 | |
| | | | Cracked | | | | | | |
| | | | 490 | 1,155 | 630 | 425 | 1,010 | 550 | |

1. Allowable loads are governed by tests and may not be increased ($C_D$ = 1.0).
2. The tabulated allowable (ASD) loads may be multiplied by 1.67 for designs for wind and in SDC A&B, and by 1.4 for designs in SDC C through F to obtain the LRFD loads.
3. Minimum concrete compression strength, $f'_C$ is 2,500 psi.
4. Allowable loads are based on a minimum stemwall width of 6".
5. For simultaneous loads in more than one direction, the connector must be evaluated using the Unity Equation.
6. Per Section 1613 of the 2012, 2015 and 2018 IBC, detached one- and two-family dwellings in SDC C may use the "Wind and SDC A&B" allowable loads.
7. Parallel-to-Track loads for One-Leg-Up Installation: SDC A–C = 985 lb., SDC C–F = 860 lb.
8. See *Fastening Systems* catalog (C-F-2019) on **strongtie.com** for more information on Simpson Strong-Tie fasteners.

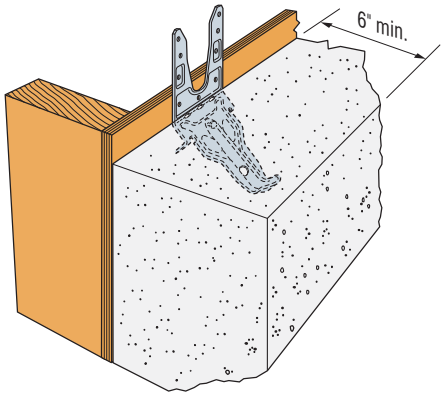


**Standard MASAP Installation in Concrete**

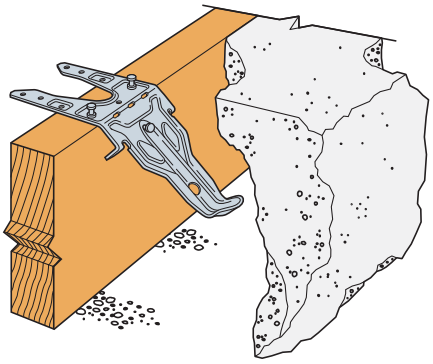

**Standard MASA Installation in Concrete**

C-CF-2020 ©2020 SIMPSON STRONG-TIE COMPANY INC.

# Anchors

# Simpson Strong-Tie® Anchor Solutions for CFS Construction

The most frequently applicable and suitable Simpson Strong-Tie Anchors used with CFS installations.
For further information and more anchorage solutions, please visit **strongtie.com**.

✓ = Code listed ✓ = Tested — = Not tested

| Product | | | Tested Base Code Listings | | | | | |
|---|---|---|---|---|---|---|---|---|
| | | | Concrete | | Concrete on Metal Deck | CMU | | Other |
| | | | Cracked | Uncracked | | Grout-Filled | Hollow | |
| Adhesive Anchors | SET-3G™ | | ✓ | ✓ | — | — | — | — |
| | SET-XP® | | ✓ | ✓ | — | ✓ | ✓ | — |
| | AT-XP® | | ✓ | ✓ | — | ✓ | ✓ | — |
| Mechanical Anchors | Titen HD® (THD) (reference pp. 155–159) | | ✓ | ✓ | ✓ | ✓ | ✓ | — |
| | Titen HD® Countersunk Screw Anchor | | ✓ | ✓ | ✓ | ✓ | ✓ | — |
| | Strong-Bolt® 2 (STB2) | | ✓ | ✓ | ✓ | ✓ | — | — |
| | Wedge-All® (WA) | | — | ✓ | ✓ | ✓ | — | — |
| | Tie-Wire (TW) | | — | ✓ | ✓ | — | — | — |



C-CF-2020 ©2020 SIMPSON STRONG-TIE COMPANY INC.

# Simpson Strong-Tie® Anchor Solutions for CFS Construction

✓ = Code listed ✓ = Tested — = Not tested

| | Product | | Tested Base Code Listings | | | | | |
|---|---|---|---|---|---|---|---|---|
| | | | Concrete | | Concrete on Metal Deck | CMU | | Other |
| | | | Cracked | Uncracked | | Grout-Filled | Hollow | |
| Mechanical Anchors | Titen® 2 (TTN2) | | — | ✓ | — | ✓ | ✓ | — |
| | Drop-In (DIAB) | | — | ✓ | ✓ | — | — | Hollow Core ✓ |
| | Hollow Drop-In (HDIA) | | — | ✓ | — | — | ✓ | — |
| | Zinc Nailon™ (ZN) | | — | ✓ | — | — | — | — |
| | Crimp Drive® (CD) | | — | ✓ | ✓ | — | — | — |
| Direct Fastening | Powder-Actuated Fasteners (PDPAT, PDPA) (reference pp. 160–162) | | — | ✓ | ✓ | ✓ | ✓ | Steel ✓ |
| | Gas-Actuated Fasteners (GDP, GDPS) | | — | ✓ | ✓ | ✓ | ✓ | Steel ✓ |
| | Gas-Actuated Fasteners (GDPSK) | 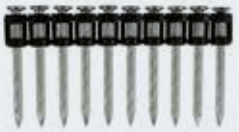 | — | — | — | — | — | Plywood/ OSB to CFS ✓ |

Anchors

C-CF-2020 ©2020 SIMPSON STRONG-TIE COMPANY INC.

# Titen HD® Heavy-Duty Screw Anchor

The original high-strength screw anchor for use in cracked and uncracked concrete, as well as uncracked masonry. The Titen HD offers low installation torque and outstanding performance. Designed and tested in dry, interior, non-corrosive environments or temporary outdoor applications, the Titen HD demonstrates industry-leading performance even in seismic conditions.

### Features

- Code listed under IBC/IRC in accordance with ICC-ES AC193 and ACI 355.2 for cracked and uncracked concrete per ICC-ES ESR-2713
- Code listed under IBC/IRC in accordance with ICC-ES AC106 for masonry per ICC-ES ESR-1056
- Qualified for static and seismic loading conditions
- Thread design undercuts to efficiently transfer the load to the base material
- Standard fractional sizes
- Specialized heat-treating process creates tip hardness for better cutting without compromising the ductility
- No special drill bit required — designed to install using standard-sized ANSI tolerance drill bits
- Hex-washer head requires no separate washer, unless required by code, and provides a clean installed appearance
- Removable — ideal for temporary anchoring (e.g., formwork, bracing) or applications where fixtures may need to be moved
- Reuse of the anchor to achieve listed load values is not recommended

**Codes**: ICC-ES ESR-2713 (concrete); ICC-ES ESR-1056 (masonry); City of L.A. RR25741 (concrete), RR25560 (masonry); Florida FL-15730.6; FM 3017082, 3035761 and 3043442; Multiple DOT listings

**Material**: Carbon steel

**Coating**: Zinc plated or mechanically galvanized.
Not recommended for permanent exterior use or highly corrosive environments.

Titen HD
Screw Anchor

Cracked Concrete
CODE LISTED

Serrated teeth on the tip of the Titen HD screw anchor facilitate cutting and reduce installation torque.

### Installation

Holes in metal fixtures to be mounted should match the diameter specified in the table below.

Use a Titen HD screw anchor one time only — installing the anchor multiple times may result in excessive thread wear and reduce load capacity.

Do not use impact wrenches to install into hollow CMU.

**Caution:** Oversized holes in base material will reduce or eliminate the mechanical interlock of the threads with the base material and reduce the anchor's load capacity.

1. Drill a hole in the base material using a carbide drill bit the same diameter as the nominal diameter of the anchor to be installed. Drill the hole to the specified embedment depth plus minimum hole depth overdrill (see table below right) to allow the thread tapping dust to settle, and blow it clean using compressed air. (Overhead installations need not be blown clean.) Alternatively, drill the hole deep enough to accommodate embedment depth and the dust from drilling and tapping.
2. Insert the anchor through the fixture and into the hole.
3. Tighten the anchor into the base material until the hex-washer head contacts the fixture.

### Installation Sequence

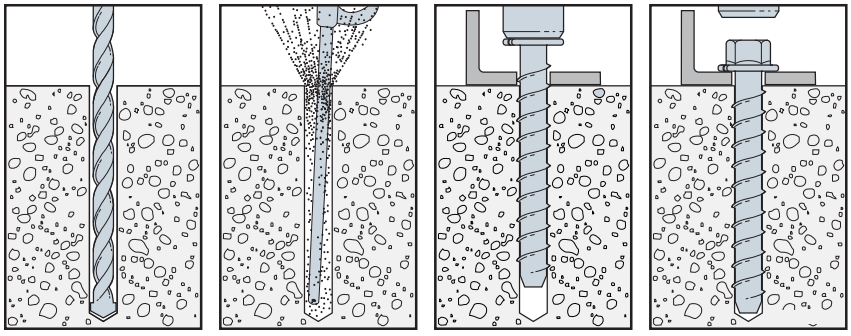

## Additional Installation Information for Structural Steel

| Titen HD® Diameter (in.) | Wrench Size (in.) | Recommended Steel Fixture Hole Size (in.) | Minimum Hole Depth Overdrill (in.) |
|---|---|---|---|
| ¼ | ⅜ | ⅜ to 7⁄16 | ⅛ |
| ⅜ | 9⁄16 | ½ to 9⁄16 | ¼ |
| ½ | ¾ | ⅝ to 11⁄16 | ½ |
| ⅝ | 15⁄16 | ¾ to 13⁄16 | ½ |
| ¾ | 1 ⅛ | ⅞ to 15⁄16 | ½ |

Suggested fixture hole sizes are for structural steel thicker than 12 gauge only. Larger holes are not required for wood or cold-formed steel members.



C-CF-2020 ©2020 SIMPSON STRONG-TIE COMPANY INC.

# **Titen HD®** Heavy-Duty Screw Anchor

SIMPSON Strong-Tie®

## Titen HD Anchor Product Data — Zinc Plated

| Size (in.) | Model No. | Drill Bit Dia. (in.) | Wrench Size (in.) | Quantity | |
|---|---|---|---|---|---|
| | | | | Box | Carton |
| ¼ x 1⅞ | THDB25178H | ¼ | ⅜ | 100 | 500 |
| ¼ x 2¾ | THDB25234H | ¼ | ⅜ | 50 | 250 |
| ¼ x 3 | THDB25300H | ¼ | ⅜ | 50 | 250 |
| ¼ x 3½ | THDB25312H | ¼ | ⅜ | 50 | 250 |
| ¼ x 4 | THDB25400H | ¼ | ⅜ | 50 | 250 |
| ⅜ x 1¾ | THD37134H† | ⅜ | 9⁄16 | 50 | 250 |
| ⅜ x 2½ | THD37212H† | ⅜ | 9⁄16 | 50 | 200 |
| ⅜ x 3 | THD37300H | ⅜ | 9⁄16 | 50 | 200 |
| ⅜ x 4 | THD37400H | ⅜ | 9⁄16 | 50 | 200 |
| ⅜ x 5 | THD37500H | ⅜ | 9⁄16 | 50 | 100 |
| ⅜ x 6 | THD37600H | ⅜ | 9⁄16 | 50 | 100 |
| ½ x 3 | THD50300H | ½ | ¾ | 25 | 100 |
| ½ x 4 | THD50400H | ½ | ¾ | 20 | 80 |
| ½ x 5 | THD50500H | ½ | ¾ | 20 | 80 |
| ½ x 6 | THD50600H | ½ | ¾ | 20 | 80 |
| ½ x 6½ | THD50612H | ½ | ¾ | 20 | 40 |
| ½ x 8 | THD50800H | ½ | ¾ | 20 | 40 |
| ½ x 12 | THD501200H | ½ | ¾ | 5 | 25 |
| ½ x 13 | THD501300H | ½ | ¾ | 5 | 25 |
| ½ x 14 | THD501400H | ½ | ¾ | 5 | 25 |
| ½ x 15 | THD501500H | ½ | ¾ | 5 | 25 |
| ⅝ x 4 | THDB62400H | ⅝ | 15⁄16 | 10 | 40 |
| ⅝ x 5 | THDB62500H | ⅝ | 15⁄16 | 10 | 40 |
| ⅝ x 6 | THDB62600H | ⅝ | 15⁄16 | 10 | 40 |
| ⅝ x 6½ | THDB62612H | ⅝ | 15⁄16 | 10 | 40 |
| ⅝ x 8 | THDB62800H | ⅝ | 15⁄16 | 10 | 20 |
| ⅝ x 10 | THDB62100H | ⅝ | 15⁄16 | 10 | 20 |
| ¾ x 4 | THD75400H | ¾ | 1⅛ | 10 | 40 |
| ¾ x 5 | THD75500H | ¾ | 1⅛ | 5 | 20 |
| ¾ x 6 | THDT75600H | ¾ | 1⅛ | 5 | 20 |
| ¾ x 7 | THD75700H | ¾ | 1⅛ | 5 | 10 |
| ¾ x 8½ | THD75812H | ¾ | 1⅛ | 5 | 10 |
| ¾ x 10 | THD75100H | ¾ | 1⅛ | 5 | 10 |

† These models do not meet minimum embedment depth requirements for strength design and require maximum installation torque of 25 ft. – lb. using a torque wrench, driver drill or cordless ¼" impact driver with a maximum permitted torque rating of 100 ft. – lb.

## Titen HD Anchor Product Data — Mechanically Galvanized

| Size (in.) | Model No. | Drill Bit Dia. (in.) | Wrench Size (in.) | Quantity | |
|---|---|---|---|---|---|
| | | | | Box | Carton |
| ⅜ x 3 | THD37300HMG | ⅜ | 9⁄16 | 50 | 200 |
| ⅜ x 4 | THD37400HMG | | | 50 | 200 |
| ⅜ x 5 | THD37500HMG | | | 50 | 100 |
| ⅜ x 6 | THD37600HMG | | | 50 | 100 |
| ½ x 4 | THD50400HMG | ½ | ¾ | 20 | 80 |
| ½ x 5 | THD50500HMG | | | 20 | 80 |
| ½ x 6 | THD50600HMG | | | 20 | 80 |
| ½ x 6½ | THD50612HMG | | | 20 | 40 |
| ½ x 8 | THD50800HMG | | | 20 | 40 |
| ⅝ x 5 | THDB62500HMG | ⅝ | 15⁄16 | 10 | 40 |
| ⅝ x 6 | THDB62600HMG | | | 10 | 40 |
| ⅝ x 6½ | THDB62612HMG | | | 10 | 40 |
| ⅝ x 8 | THDB62800HMG | | | 10 | 20 |
| ¾ x 6 | THDT75600HMG | ¾ | 1⅛ | 5 | 20 |
| ¾ x 8½ | THD75812HMG | | | 5 | 10 |
| ¾ x 10 | THD75100HMG | | | 5 | 10 |

Mechanical galvanizing meets ASTM B695, Class 65, Type 1. Intended for some pressure-treated wood sill plate applications. Not for use in other corrosive or outdoor environments. Visit **strongtie.com/info** for more corrosion information.



C-CF-2020 ©2020 SIMPSON STRONG-TIE COMPANY INC.

# Titen HD® Heavy-Duty Screw Anchor

SIMPSON Strong-Tie®

## Table 1: Titen HD — Tension Loads Attaching Cold-Formed Steel To Normal-Weight Concrete (lb.)[6]

| Anchor Size (in.) | Drill Bit (in.) | Edge Distance (in.) | End Distance (in.) | Min. Emb. Depth (in.) | Concrete Thickness (in.) | Spacing (in.) | Concrete ≥ 2,500 psi[3,4] | | | | Cold-Formed Steel (ASD)[5] | | | |
|---|---|---|---|---|---|---|---|---|---|---|---|---|---|---|
| | | | | | | | LRFD[1,9,10] (Seismic) | LRFD[1,8,10] (Wind) | ASD[2,9,10] (Seismic) | ASD[2,8,10] (Wind) | 33 mil (20 ga.) | 43 mil (18 ga.) | 54 mil (16 ga.) | 68 mil (14 ga.) |
| ¼ x 1⅞ | ¼ | 1½ | 3 | 1⅝ | 3¼ | 6 | 470 | 630 | 330 | 375 | 390 | 505 | 920 | 1,160 |
| | | 1¾ | 3 | 1⅝ | 3¼ | 6 | 530 | 705 | 370 | 425 | | | | |
| | | 3 | 3 | 1⅝ | 3¼ | 6 | 540 | 715 | 375 | 430 | | | | |
| ¼ x 2¾ | | 1½ | 3 | 2½ | 3½ | 6 | 725 | 965 | 510 | 580 | | | | |
| | | 1¾ | 3 | 2½ | 3½ | 6 | 790 | 1,050 | 555 | 630 | | | | |
| | | 3 | 3 | 2½ | 3½ | 6 | 930 | 1,240 | 650 | 745 | | | | |
| ⅜ x 3 | ⅜ | 1¾ | 3 | 2½ | 4 | 6 | 600 | 800 | 420 | 480 | 585 | 760 | 1,380 | 1,740 |
| ½ x 4 | ½ | 1¾ | 4 | 3¼ | 5 | 8 | 940 | 1,255 | 660 | 755 | 585 | 760 | 1,380 | 1,740 |
| | | 3 | 4 | 3¼ | 5 | 8 | 1,320 | 1,760 | 925 | 1,055 | | | | |
| | | 4 | 4 | 3¼ | 5 | 8 | 1,490 | 1,985 | 1,045 | 1,190 | | | | |

See footnotes on p. 159.

## Table 2: Titen HD — Shear Loads Perpendicular to Edge in Normal-Weight Concrete (lb.)[6]

| Anchor Size (in.) | Drill Bit (in.) | Edge Distance (in.) | End Distance (in.) | Min. Emb. Depth (in.) | Concrete Thickness (in.) | Spacing (in.) | Concrete ≥ 2,500 psi[3,4] | | | | Cold-Formed Steel (ASD)[5] | | | |
|---|---|---|---|---|---|---|---|---|---|---|---|---|---|---|
| | | | | | | | LRFD[1,9,10] (Seismic) | LRFD[1,8,10] (Wind) | ASD[2,9,10] (Seismic) | ASD[2,8,10] (Wind) | 33 mil (20 ga.) | 43 mil (18 ga.) | 54 mil (16 ga.) | 68 mil (14 ga.) |
| ¼ x 1⅞ | ¼ | 1½ | 3 | 1⅝ | 3¼ | 6 | 305 | 305 | 215 | 185 | 350 | 455 | 830 | 1,045 |
| | | 1¾ | 3 | 1⅝ | 3¼ | 6 | 385 | 385 | 270 | 230 | | | | |
| | | 3 | 3 | 1⅝ | 3¼ | 9 | 555 | 555 | 390 | 335 | | | | |
| ¼ x 2¾ | | 1½ | 3 | 2½ | 3½ | 6 | 340 | 340 | 235 | 205 | | | | |
| | | 1¾ | 3 | 2½ | 3½ | 6 | 425 | 425 | 300 | 255 | | | | |
| | | 3 | 3 | 2½ | 3½ | 9 | 635 | 635 | 445 | 380 | | | | |
| ⅜ x 3 | ⅜ | 1¾ | 7 | 2½ | 4 | 5¼ | 475 | 475 | 335 | 285 | 510 | 685 | 1,240 | 1,565 |
| | | 3 | 7 | 2½ | 4 | 9 | 1,000 | 1,000 | 700 | 600 | | | | |
| ½ x 4 | ½ | 1¾ | 8 | 3¼ | 5 | 5¼ | 545 | 545 | 380 | 325 | 595 | 880 | 1,655 | 2,085 |
| | | 3 | 8 | 3¼ | 5 | 9 | 1,225 | 1,225 | 860 | 735 | | | | |

See footnotes on p. 159.

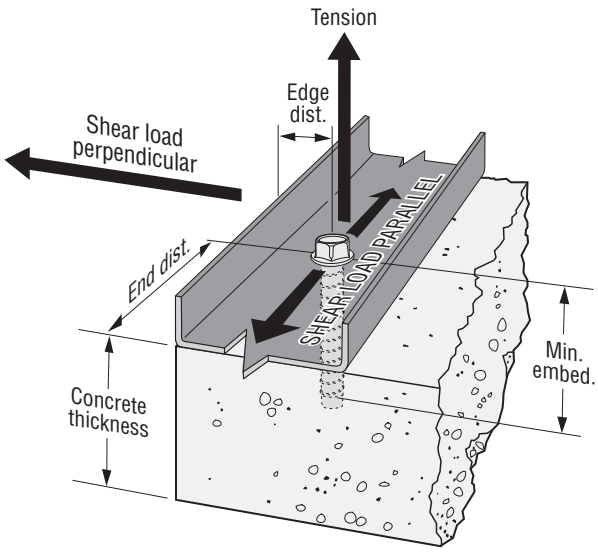


**Edge and end distances for Titen HD in concrete slab corner condition.**



C-CF-2020 ©2020 SIMPSON STRONG-TIE COMPANY INC.

# Titen HD® Heavy-Duty Screw Anchor

SIMPSON Strong-Tie®

## Table 3: Titen HD — Shear Loads Parallel to Edge in Normal-Weight Concrete (lb./ft.)[6]

| Anchor Size (in.) | Drill Bit (in.) | Edge Distance (in.) | End Distance (in.) | Min. Emb. Depth (in.) | Concrete Thickness (in.) | Spacing | Concrete ≥ 2,500 psi[3,4] | | | | Cold-Formed Steel (ASD)[5] | | | |
|---|---|---|---|---|---|---|---|---|---|---|---|---|---|---|
| | | | | | | | LRFD[1,9,10] (Seismic) | LRFD[1,8,10] (Wind) | ASD[2,9,10] (Seismic) | ASD[2,8,10] (Wind) | 33 mil (20 ga.) | 43 mil (18 ga.) | 54 mil (16 ga.) | 68 mil (14 ga.) |
| ¼ x 1⅞ | ¼ | 1½ | 3 | 1⅝ | 3¼ | 0' – 6" | 790 | 790 | 550 | 470 | 700 | 910 | 1,660 | 2,090 |
| | | | | | | 0' – 8" | 595 | 595 | 415 | 355 | 525 | 685 | 1,245 | 1,570 |
| | | | | | | 1'– 0" | 395 | 395 | 275 | 235 | 350 | 455 | 830 | 1,045 |
| | | | | | | 1'– 4" | 295 | 295 | 205 | 175 | 265 | 340 | 625 | 785 |
| | | | | | | 2' – 0" | 200 | 200 | 140 | 120 | 175 | 230 | 415 | 525 |
| | | | | | | 2' – 8" | 150 | 150 | 105 | 90 | 130 | 170 | 310 | 390 |
| | | | | | | 4' – 0" | 100 | 100 | 70 | 60 | 90 | 115 | 210 | 260 |
| | | | | | | 6' – 0" | 65 | 65 | 45 | 40 | 60 | 75 | 140 | 175 |
| ¼ x 1⅞ | ¼ | 3 | 3 | 1⅝ | 3¼ | 0' – 9" | 740 | 740 | 520 | 445 | 465 | 605 | 1,105 | 1,395 |
| | | | | | | 1'– 0" | 555 | 555 | 390 | 335 | 350 | 455 | 830 | 1,045 |
| | | | | | | 1'– 4" | 415 | 415 | 295 | 250 | 265 | 340 | 625 | 785 |
| | | | | | | 2' – 0" | 280 | 280 | 195 | 170 | 175 | 230 | 415 | 525 |
| | | | | | | 2' – 8" | 210 | 210 | 145 | 125 | 130 | 170 | 310 | 390 |
| | | | | | | 4' – 0" | 140 | 140 | 100 | 85 | 90 | 115 | 210 | 260 |
| | | | | | | 6' – 0" | 95 | 95 | 65 | 55 | 60 | 75 | 140 | 175 |
| ¼ x 2¾ | ¼ | 3 | 3 | 2½ | 3½ | 0' – 9" | 845 | 845 | 595 | 505 | 465 | 605 | 1,105 | 1,395 |
| | | | | | | 1'– 0" | 635 | 635 | 445 | 380 | 350 | 455 | 830 | 1,045 |
| | | | | | | 1'– 4" | 475 | 475 | 335 | 285 | 265 | 340 | 625 | 785 |
| | | | | | | 2' – 0" | 320 | 320 | 225 | 190 | 175 | 230 | 415 | 525 |
| | | | | | | 2' – 8" | 240 | 240 | 165 | 145 | 130 | 170 | 310 | 390 |
| | | | | | | 4' – 0" | 160 | 160 | 110 | 95 | 90 | 115 | 210 | 260 |
| | | | | | | 6' – 0" | 105 | 105 | 75 | 65 | 60 | 75 | 140 | 175 |
| ⅜ x 3 | ⅜ | 3 | 7 | 2½ | 4 | 0' – 8" | 1,770 | 1,770 | 1,240 | 1,060 | 765 | 1,030 | 1,860 | 2,350 |
| | | | | | | 1'– 0" | 1,180 | 1,180 | 825 | 710 | 510 | 685 | 1,240 | 1,565 |
| | | | | | | 1'– 4" | 885 | 885 | 620 | 530 | 385 | 515 | 930 | 1,175 |
| | | | | | | 2' – 0" | 590 | 590 | 415 | 355 | 255 | 340 | 620 | 780 |
| | | | | | | 2' – 8" | 445 | 445 | 310 | 265 | 190 | 255 | 465 | 585 |
| | | | | | | 4' – 0" | 295 | 295 | 205 | 175 | 130 | 170 | 310 | 390 |
| | | | | | | 6' – 0" | 195 | 195 | 135 | 115 | 85 | 115 | 205 | 260 |
| ½ x 4 | ½ | 3 | 8 | 3¼ | 5 | 0' – 8" | 2,505 | 2,505 | 1,755 | 1,505 | 895 | 1,320 | 2,485 | 3,130 |
| | | | | | | 1'– 0" | 1,670 | 1,670 | 1,170 | 1,000 | 595 | 880 | 1,655 | 2,085 |
| | | | | | | 1'– 4" | 1,255 | 1,255 | 880 | 755 | 445 | 660 | 1,240 | 1,565 |
| | | | | | | 2' – 0" | 835 | 835 | 585 | 500 | 300 | 440 | 830 | 1,045 |
| | | | | | | 2' – 8" | 625 | 625 | 440 | 375 | 220 | 330 | 620 | 780 |
| | | | | | | 4' – 0" | 420 | 420 | 295 | 250 | 150 | 220 | 415 | 520 |
| | | | | | | 6' – 0" | 280 | 280 | 195 | 170 | 100 | 145 | 275 | 350 |

See footnotes on p. 159.



C-CF-2020 ©2020 SIMPSON STRONG-TIE COMPANY INC.

# Titen HD® Heavy-Duty Screw Anchor

SIMPSON Strong-Tie®

## Table 4: Titen HD — Tension Loads Attaching Cold-Formed Steel to Top of Normal-Weight Concrete over Metal Deck (lb.)[6,11]

| Anchor Size (in.) | Drill Bit (in.) | Min. Edge Distance (in.) | Min. End Distance (in.) | Emb. Depth (in.) | Min. Concrete Thickness (in.) | Spacing (in.) | Concrete ≥ 3,000 psi[3,4] | | | | Cold-Formed Steel (ASD)[5] | | | |
|---|---|---|---|---|---|---|---|---|---|---|---|---|---|---|
| | | | | | | | LRFD[1,9,10] (Seismic) | LRFD[1,8,10] (Wind) | ASD[2,9,10] (Seismic) | ASD[2,8,10] (Wind) | 33 mil (20 ga.) | 43 mil (18 ga.) | 54 mil (16 ga.) | 68 mil (14 ga.) |
| ¼ x 1⅞ | ¼ | 3½ | 3¾ | 1⅝ | 2½ | 3½ | 580 | 775 | 405 | 545 | 390 | 505 | 920 | 1,160 |
| ⅜ x 3 | ⅜ | 3 | 7¼ | 2½ | 3¼ | 3 | 660 | 880 | 460 | 615 | 585 | 760 | 1,380 | 1,740 |

See footnotes below.

## Table 5: Titen HD — Shear Loads Perpendicular to Edge in Top of Normal-Weight Concrete over Metal Deck (lb.)[6,11]

| Anchor Size (in.) | Drill Bit (in.) | Min. Edge Distance (in.) | Min. End Distance (in.) | Emb. Depth (in.) | Min. Concrete Thickness (in.) | Spacing (in.) | Concrete ≥ 3,000 psi[3,4] | | | | Cold-Formed Steel (ASD)[5] | | | |
|---|---|---|---|---|---|---|---|---|---|---|---|---|---|---|
| | | | | | | | LRFD[1,9,10] (Seismic) | LRFD[1,8,10] (Wind) | ASD[2,9,10] (Seismic) | ASD[2,8,10] (Wind) | 33 mil (20 ga.) | 43 mil (18 ga.) | 54 mil (16 ga.) | 68 mil (14 ga.) |
| ¼ x 1⅞ | ¼ | 3½ | 3¾ | 1⅝ | 2½ | 3½ | 450 | 450 | 315 | 315 | 350 | 455 | 830 | 1,045 |
| ⅜ x 3 | ⅜ | 3 | 7¼ | 2½ | 3¼ | 3 | 660 | 660 | 460 | 460 | 510 | 685 | 1,240 | 1,565 |

See footnotes below.

## Table 6: Titen HD — Shear Loads Parallel to Edge in Top of Normal-Weight Concrete over Metal Deck (lb./ft.)[6,11]

| Anchor Size (in.) | Drill Bit (in.) | Min. Edge Distance (in.) | Min. End Distance (in.) | Emb. Depth (in.) | Min. Concrete Thickness (in.) | Spacing | Concrete ≥ 3,000 psi[3,4] | | | | Cold-Formed Steel (ASD)[5] | | | |
|---|---|---|---|---|---|---|---|---|---|---|---|---|---|---|
| | | | | | | | LRFD[1,9,10] (Seismic) | LRFD[1,8,10] (Wind) | ASD[2,9,10] (Seismic) | ASD[2,8,10] (Wind) | 33 mil (20 ga.) | 43 mil (18 ga.) | 54 mil (16 ga.) | 68 mil (14 ga.) |
| ¼ x 1⅞ | ¼ | 3½ | 3¾ | 1⅝ | 2½ | 1'–0" | 635 | 635 | 445 | 445 | 350 | 455 | 830 | 1,045 |
| | | | | | | 1'–4" | 475 | 475 | 335 | 335 | 265 | 340 | 625 | 785 |
| ⅜ x 3 | ⅜ | 3 | 7¼ | 2½ | 3¼ | 0'–9" | 1,590 | 1,590 | 1,115 | 1,115 | 680 | 915 | 1,655 | 2,085 |
| | | | | | | 1'–0" | 1,195 | 1,195 | 835 | 835 | 510 | 685 | 1,240 | 1,565 |
| | | | | | | 1'–4" | 895 | 895 | 625 | 625 | 385 | 515 | 930 | 1,175 |

See footnotes below.

### Footnotes

1. Anchorage designs conform to ACI 318-14 Chapter 17 and assume cracked concrete with no supplementary reinforcement.
2. Allowable Stress Design (ASD) values are obtained by multiplying Load Resistance Factor Design (LRFD) capacities by 0.7 for seismic and 0.6 for wind.
3. Anchor is considered as an individual anchor without influence from other anchors. For tables 2 and 3, shear load is applied perpendicular and parallel to the edge of concrete respectively.
4. Concrete shall have a minimum $f'_c$ of 2,500 psi, 3,000 psi for metal deck. Reference ICC-ES ESR-2713 for further information.
5. Cold-Formed Steel (CFS) tension pullover values are based on AISI S-100, Eq. E4.4.2-1, $d_w$ = 0.50" (¼" THD), $d_w$ = 0.75" (⅜" and ½" THD) and Ω = 3.0. Reference General Notes for CFS properties. To convert from ASD to LRFD multiply value by 1.5. Tension values where applicable do not account for weak axis bending in the sill member.
6. Governing load is the lesser of concrete and CFS.
7. For conditions not covered by this table, use the Simpson Strong-Tie® Anchor Designer™ software available at **strongtie.com**.
8. Wind design includes SDC A&B.
9. The listed load values are governed by a brittle failure mode, the Designer shall consider ductility requirements of ACI 318-14 Section 17.2.3.4.3 for designing anchorage in Seismic Design Category C–F.
10. For installation in sand-lightweight concrete, concrete values shall be be multiplied by 0.68.
11. For tables 4, 5 and 6, metal deck configuration to comply with Figure 5 of ICC-ES ESR-2713.



C-CF-2020 ©2020 SIMPSON STRONG-TIE COMPANY INC.

# Powder-Actuated Fasteners

## 0.300" Headed Fasteners with 0.157" Shank Diameter

| Length (in.) | Model No. | Description | Pack Qty. | Carton Qty. | Compatible Tools | |
|---|---|---|---|---|---|---|
| | | | | | Simpson Strong-Tie | Others |
| ½ | PDPA-50 | 0.157 x ½" | 100 | 1,000 | PTP-27L<br>PT-27<br>PT-22A<br>PT-22HA | 721, D-60, U-2000 and most other low-velocity tools. |
| ½ knurled | PDPA-50K | 0.157 x ½" knurl | 100 | 1,000 | | |
| ⅝ knurled | PDPA-62K | 0.157 x ⅝" knurl | 100 | 1,000 | | |
| ¾ | PDPA-75 | 0.157 x ¾" | 100 | 1,000 | | |
| 1 | PDPA-100 | 0.157 x 1" | 100 | 1,000 | | |
| 1 1⁄16 | PDPA-106 | 0.157 x 1 1⁄16" | 100 | 1,000 | | |
| 1 ¼ | PDPA-125 | 0.157 x 1 ¼" | 100 | 1,000 | | |
| 1 5⁄16 | PDPA-131 | 0.157 x 1 5⁄16" | 100 | 1,000 | | |
| 1 ½ | PDPA-150 | 0.157 x 1 ½" | 100 | 1,000 | | |
| 1 ⅞ | PDPA-187 | 0.157 x 1 ⅞" | 100 | 1,000 | | |
| 2 | PDPA-200 | 0.157 x 2" | 100 | 1,000 | | |
| 2 ½ | PDPA-250 | 0.157 x 2 ½" | 100 | 1,000 | | |
| 2 ⅞ | PDPA-287 | 0.157 x 2 ⅞" | 100 | 1,000 | | |

*These models available in mechanically galvanized finish: PDPA-250MG and PDPA-287MG.*

**PDPA**

## 0.300" Headed Tophat Fasteners with 0.157" Shank Diameter

| Length (in.) | Model No. | Description | Pack Qty. | Carton Qty. | Compatible Tools | |
|---|---|---|---|---|---|---|
| | | | | | Simpson Strong-Tie | Others |
| ½ knurled | PDPAT-50K | 0.157 x ½" knurl | 100 | 1,000 | PTP-27L<br>PT-27<br>PT-22A<br>PT-22HA | DX-460, 721, D-60, U-2000 and most other low-velocity tools. |
| ⅝ knurled | PDPAT-62K | 0.157 x ⅝" knurl | 100 | 1,000 | | |
| ⅝ knurled | PDPAT-62KP | 0.157 x ⅝" knurl | 100 | 1,000 | | |
| ¾ | PDPAT-75 | 0.157 x ¾" | 100 | 1,000 | | |
| 1 | PDPAT-100 | 0.157 x 1" | 100 | 1,000 | | |

**PDPAT-62KP**
*(point protrusion for hole spotting)*



C-CF-2020 ©2020 SIMPSON STRONG-TIE COMPANY INC.

# Powder-Actuated Fasteners

SIMPSON Strong-Tie®

## PDPA and PDPAT Pins — Shear and Tension Loads

| Model Type | Dia. (in.) | Pin Spacing | Base Material: Normal Weight Concrete[1] Emb. Depth (in.) | Normal Weight Concrete[1] 2,500 psi | Normal Weight Concrete[1] 4,000 psi | Sand-Lightweight Concrete Filled Steel Deck[6,7] Emb. Depth (in.) | Sand-Lightweight Concrete Filled Steel Deck[6,7] Concrete[1] (Top) | Sand-Lightweight Concrete Filled Steel Deck[6,7] Lower Flute[8] (Bottom) | A36 Steel[2] 3/16" | A36 Steel[2] 1/4" | A36 Steel[2] 3/8" | A36 Steel[2] 1/2" | A36 Steel[2] 3/4" | Attached Material: Cold-Formed Steel[3] 33 mil (20 ga.) | Cold-Formed Steel[3] 43 mil (18 ga.) | Cold-Formed Steel[3] 54 mil (16 ga.) |
|---|---|---|---|---|---|---|---|---|---|---|---|---|---|---|---|---|
| PDPA PDPAT | Allowable Shear Load[4,5,13] (lb./ft.) | | | | | | | | | | | | | | | |
| | 0.157 | 0'-6" | 1 | 570 | 620 | 1 | 450 | 560 | 820 | 730 | 770[10] | 770[10] | 650[9] | 760[12] | 990[12] | 1,800[12] |
| | | | 1¼ | 720 | 840 | 1¼ | 840 | 640 | | | | | | | | |
| | | 0'-8" | 1 | 430 | 465 | 1 | 340 | 420 | 615 | 550 | 580[10] | 580[10] | 490[9] | 570[12] | 745[12] | 1,350[12] |
| | | | 1¼ | 540 | 630 | 1¼ | 630 | 480 | | | | | | | | |
| | | 1'-0" or - | 1 | 285 | 310 | 1 | 225 | 280 | 410 | 365 | 385[10] | 385[10] | 325[9] | 380[12] | 495[12] | 900[12] |
| | | | 1¼ | 360 | 420 | 1¼ | 420 | 320 | | | | | | | | |
| | | 2'-0" | 1 | 145 | 155 | 1 | 115 | 140 | 205 | 185 | 195[10] | 195[10] | 165[9] | 190[12] | 250[12] | 450[12] |
| | | | 1¼ | 180 | 210 | 1¼ | 210 | 160 | | | | | | | | |
| | | 3'-0" | 1 | 95 | 105 | 1 | 75 | 95 | 135 | 120 | 130[10] | 130[10] | 110[9] | 125[12] | 165[12] | 300[12] |
| | | | 1¼ | 120 | 140 | 1¼ | 140 | 105 | | | | | | | | |
| | Allowable Tension Load[4,5] (lb.) | | | | | | | | | | | | | | | |
| | 0.157 | — | 1 | 210 | 310 | 1 | 150 | 145 | 260 | 370 | 380[10] | 530[10] | 195[9] | 225[11] | 295[11] | 535[11] |
| | | | 1¼ | 320 | 380 | 1¼ | 320 | 170 | | | | | | | | |

1. For concrete the minimum edge distance and spacing is 3½" and 5" respectively.
2. For A36 steel, the minimum edge distance and spacing is 0.5" and 1" respectively. Entire pointed portion of the fastener must fully penetrate steel base material unless noted otherwise.
3. Cold-formed steel (CFS) values are based on AISI-S100, Section E4. Reference General Notes for CFS properties.
4. Governing load is the lesser of the base material and CFS.
5. Allowable loads are based on ICC-ES ESR-2138.
6. Concrete shall have a minimum compressive strength of $f'_c$ = 3,000 psi.
7. For steel deck, the minimum depth and thickness is 3" and 33 mil (20 ga.) respectively. Steel deck must have a minimum yield strength of 38,000 psi.
8. For installation through steel deck, the minimum edge and end distance is 1½" and 4" respectively with 4" minimum spacing.
9. Based upon a minimum penetration depth of 0.46" (11.7 mm).
10. For applications to structural steel, the fastener must be driven to where at least some of the point of the fastener penetrates through the steel substrate.
11. The following CFS allowable tension loads may be used for PDPAT: 390 lb. (33 mil), 505 lb. (42 mil), 915 lb. (54 mil).
12. CFS allowable shear load may be multiplied by 1.15 for PDPAT fastener.
13. Shear loads listed do not account for indirect tension due to eccentricity of load at the deflection track. Designer to evaluate combined loading as needed.

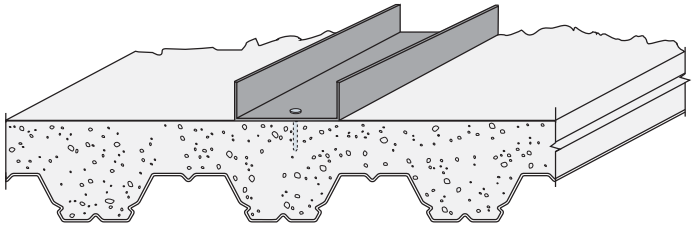

PDPAT In Lightweight Concrete Over Steel Deck

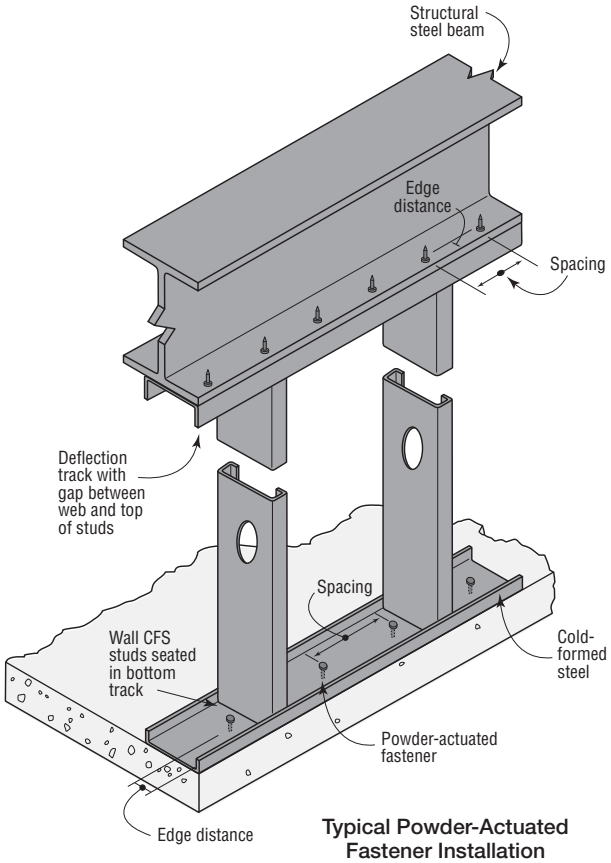


Typical Powder-Actuated Fastener Installation

Anchors

C-CF-2020 ©2020 SIMPSON STRONG-TIE COMPANY INC.

# Powder-Actuated Fasteners

## PDPA in 4,000 psi Normal-Weight Concrete

| Fastener | Shank Diameter (in.) | Fastener Length (in.) | Edge Distance (in.) | Spacing in Load Dir. (in.) | Track Width (in.) | Number of Fasteners | Allowable Shear Load (lb.) |
|---|---|---|---|---|---|---|---|
| PDPA-100 | 0.157 | 1 | 2¼ | — | 3⅝ | 1 | 240 |
| | | | | ¾ | | 2 | 310 |
| | | | | — | 6 | 1 | 240 |
| | | | | 2¼ | | 2 | 510 |
| PDPA-125 | | 1.25 | 2¼ | — | 3⅝ | 1 | 325 |
| | | | | ¾ | | 2 | 490 |
| | | | | — | 6 | 1 | 325 |
| | | | | 2¼ | | 2 | 590 |

1. Alllowable loads are based on fasteners installed through 16 ga. cold-formed steel ($F_y$ > 33 ksi).
2. Minimum concrete thickness must be three times the fastener length.
3. Edge distance and spcaing are shown in figures below.

## PDPA in 3,000 psi Sand-Lightweight Concrete

| Fastener | Shank Diameter (in.) | Fastener Length (in.) | Edge Distance (in.) | Spacing in Load Dir. (in.) | Track Width (in.) | Number of Fasteners | Allowable Shear Load (lb.) |
|---|---|---|---|---|---|---|---|
| PDPA-100 | 0.157 | 1 | 2¼ | — | 3⅝ | 1 | 235 |
| | | | | ¾ | | 2 | 310 |
| | | | | — | 6 | 1 | 235 |
| | | | | 2¼ | | 2 | 445 |
| PDPA-125 | | 1.25 | 2¼ | — | 3⅝ | 1 | 245 |
| | | | | ¾ | | 2 | 455 |
| | | | | — | 6 | 1 | 245 |
| | | | | 2¼ | | 2 | 530 |
| PDPA-150 | | 1.5 | 2¼ | — | 3⅝ | 1 | 245 |
| | | | | ¾ | | 2 | 470 |
| | | | | — | 6 | 1 | 245 |
| | | | | 2¼ | | 2 | 530 |

1. Alllowable loads are based on fasteners installed through 16 ga. cold-formed steel ($F_y$ > 33 ksi).
2. Minimum concrete thickness must be three times the fastener length.
3. Edge distance and spcaing are shown in figures below.

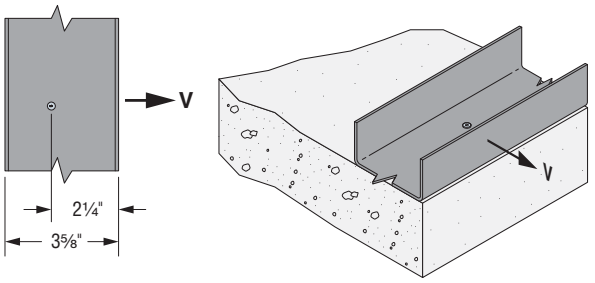


Figure 1: 3⅝" Track – One Fastener

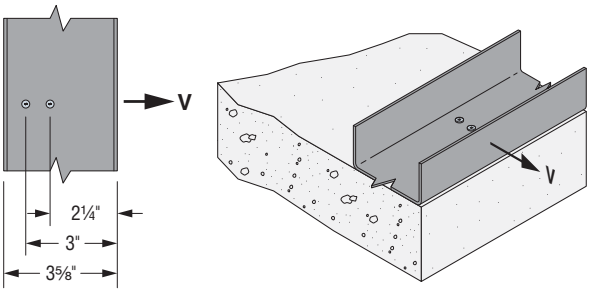


Figure 2: 3⅝" Track – Two Fasteners

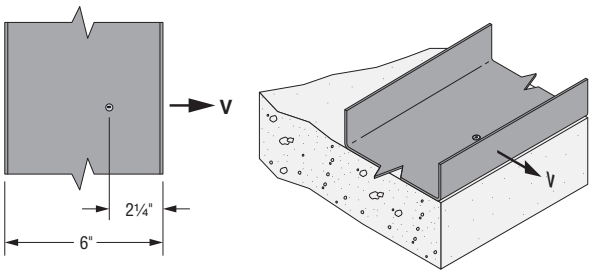


Figure 3: 6" Track – One Fastener

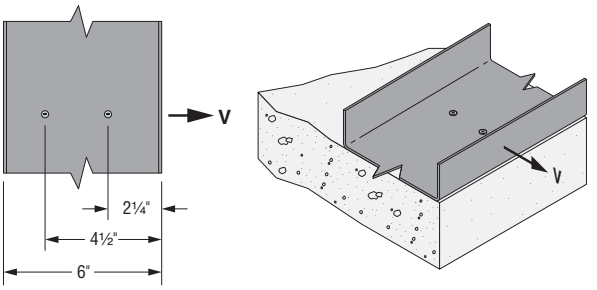


Figure 4: 6" Track – Two Fasteners



C-CF-2020 ©2020 SIMPSON STRONG-TIE COMPANY INC.

# **SB** Anchor Bolt

***This product is preferable to similar connectors because of (a) easier installation, (b) higher loads, (c) lower installed cost, or a combination of these features.***

The SB anchor bolt offers an anchorage solution for our holdowns that call for a ⅝"-diameter, a ⅞"-diameter and a 1"-diameter anchor.

SB anchor bolts are code listed by ICC-ES under the 2012/2015/2018 IBC and IRC.

**Features:**

- Identification on the bolt head showing embedment angle and model
- Sweep geometry to optimize position in form
- Rolled thread for higher tensile capacity
- Hex nuts and plate washer fixed in position
- Available in HDG for additional corrosion resistance

**Material:** ASTM F1554, Grade 36

**Finish:** None. May be ordered HDG; contact Simpson Strong-Tie.

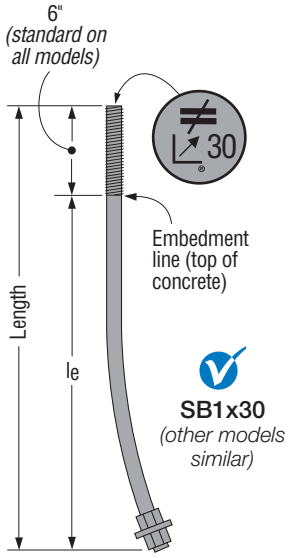


# **SSTB**® Anchor Bolt

***This product is preferable to similar connectors because of (a) easier installation, (b) higher loads, (c) lower installed cost, or a combination of these features.***

The SSTB anchor bolt is designed for maximum performance as an anchor bolt for holdowns and Simpson Strong-Tie Strong-Wall® shearwalls. Extensive testing has been done to determine the design load capacity of the SSTB when installed in many common applications.

The Simpson Strong-Tie SSTB anchor bolts are code listed by ICC-ES under the 2012, 2015 and 2018 IBC® and IRC®.

**Features:**

- Identification on the bolt head showing embedment angle and model
- Offset angle reduces side bursting, and provides more concrete cover
- Rolled thread for higher tensile capacity
- Stamped embedment line aids installation
- Available in HDG for additional corrosion resistance

**Material:** ASTM F-1554, Grade 36

**Finish:** None. May be ordered HDG; contact Simpson Strong-Tie.

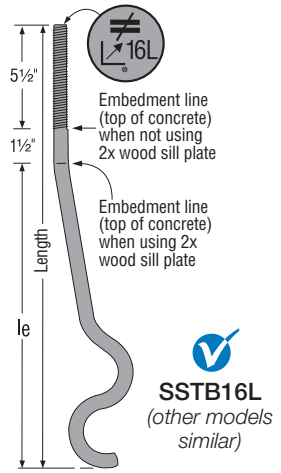


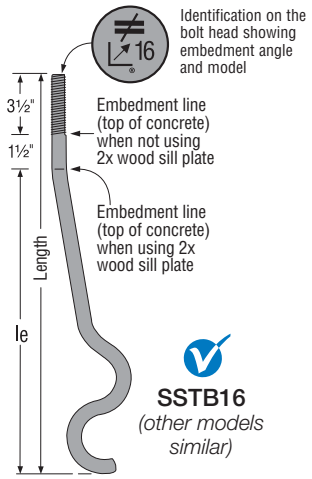


| Model No. | Dimensions (in.) | | | |
|---|---|---|---|---|
| | Stemwall Width | Diameter | Length | Min. Embed. ($l_e$) |
| SB5/8X24 | 6 | ⅝ | 24 | 18 |
| SB7/8X24 | 8 | ⅞ | 24 | 18 |
| SB1X30 | 8 | 1 | 30 | 24 |
| SSTB16 | 6 | ⅝ | 17⅝ (16L = 19⅝) | 12⅝ |
| SSTB20 | 6 | ⅝ | 21⅝ (20L = 24⅝) | 16⅝ |
| SSTB24 | 6 | ⅝ | 25⅝ (24L = 28⅛) | 20⅝ |
| SSTB28 | 8 | ⅞ | 29⅞ (28L = 32⅞) | 24⅞ |
| SSTB34 | 8 | ⅞ | 34⅞ | 28⅞ |
| SSTB36 | 8 | ⅞ | 36⅞ | 28⅞ |

These products are available with additional corrosion protection. Additional products on this page may also be available with this option. Check with Simpson Strong-Tie for details.

1. For SB and SSTB tension loads, details and installation procedure, please reference **strongtie.com**.



C-CF-2020 ©2020 SIMPSON STRONG-TIE COMPANY INC.

# **RFB** Retrofit Bolts

RFBs are clean, oil-free, pre-cut threaded rod, supplied with nut and washer. Offers a complete engineered anchoring system when used with Simpson Strong-Tie® adhesive. Inspection is easy; the head is stamped with rod length and No-Equal symbol for identification after installation.

**Material:** ASTM F1554 Grade 36

**Finish:** Zinc-Plated (unless otherwise noted), available in HDG (per ASTM A153); stainless steel (RFB#5x8SS only)

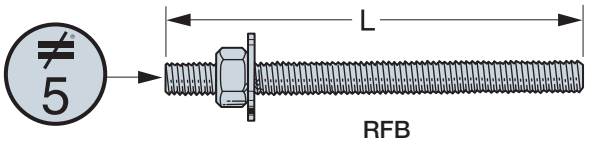


RFB

| Model No. | Length L (in.) | Bolt Diameter (in.) |
|---|---|---|
| RFB#4X4 | 4 | ½ |
| RFB#4X5 | 5 | ½ |
| RFB#4X6 | 6 | ½ |
| RFB#4X7 | 7 | ½ |
| RFB#4X10 | 10 | ½ |
| RFB#4x8HDG-R | 8 | ½ |
| RFB#5X5 | 5 | ⅝ |
| RFB#5X8 | 8 | ⅝ |
| RFB#5X10 | 10 | ⅝ |
| RFB#5X12HDG-R | 12 | ⅝ |
| RFB#5X16 | 16 | ⅝ |
| RFB#6X10.5 | 10½ | ¾ |

These products are available with additional corrosion protection. Additional products on this page may also be available with this option. Check with Simpson Strong-Tie for details.

1. RFB#4X8HDG-R and RFB#5X12HDG-R are only available with a hot-dip galvanized coating. They are retail packaged and are sold 10 per carton.
2. Washer provided on all RFB (except RFB#5x8SS).

# **PAB** Pre-Assembled Anchor Bolt

The PAB anchor bolt is a versatile cast-in-place anchor bolt ideal for high-tension-load applications, such as rod systems and shearwalls. It features a plate washer at the embedded end sandwiched between two fixed hex nuts and a head stamp for easy identification after the pour.

- Available in diameters from ½" to 1¼" in lengths from 12" to 36" (in 6" increments)
- Available in standard and high-strength steel
- Head stamp contains the No Equal sign, diameter designation and an "H" on high-strength rods

**Material:**
Standard Steel — ASTM F1554 Grade 36, A36 or A307 — $F_u$ = 58 ksi
High-Strength Steel (up to 1" dia.) — ASTM A449 — $F_u$ = 120 ksi
High-Strength Steel (1⅛" and 1¼" dia.) — ASTM A193 B7 or F1554 Grade 105 — $F_u$ = 125 ksi

**Finish:** None. May be ordered in HDG; contact Simpson Strong-Tie.

**Installation:**

- On HDG PABs, chase the threads to use standard nuts or couplers or use overtapped products in accordance with ASTM A563; for example, Simpson Strong-Tie® NUT ⅝-OST, NUT ⅞-OST, CNW ⅝-OST, CNW ⅞-OST. Some OST couplers are typically oversized on one end of the coupler nut only and will be marked with an "O" on oversized side. Couplers may be oversized on both ends. Contact Simpson Strong-Tie.

**Codes:** See p. 11 for Code Reference Key Chart

### Related Software

The Simpson Strong-Tie® Anchor Designer™ Software analyzes and suggests anchor solutions using the ACI 318-14 strength-design methodology (or CAN/CSA A23.3 Annex D Limit States Design methodology). It provides cracked- and uncracked-concrete anchorage solutions for numerous Simpson Strong-Tie mechanical and adhesive anchors as well as the PAB anchor bolt. With its easy-to-use graphical user interface, the software makes it easy for the designer to identify anchorage solutions without having to perform time-consuming calculations by hand. See **strongtie.com/software**.

### How to specify and order:

When calling out PAB anchor bolts, substitute the desired length for the "XX" in the Root Model Number.

For a ⅝"x18" anchor bolt, the model number would be PAB5-18 (or PAB5H-18 for high strength).

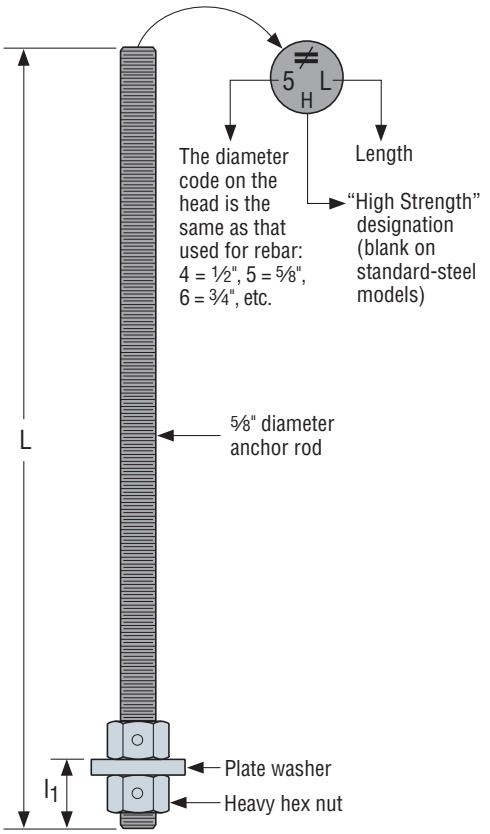


PAB

### Naming Legend

**PAB5H-12**

- PAB Anchor Bolt
- Diameter* and Grade
- Length (12", 18", 24", 30" or 36")

*Units in ⅛" Increments (Ex: 9 = ⅝" or 1⅛")

C-CF-2020 ©2020 SIMPSON STRONG-TIE COMPANY INC.

# Anchor Software

## Anchor Designer™ Software for ACI 318, ETAG and CSA

Simpson Strong-Tie® Anchor Designer Software is the latest anchorage design tool for structural engineers to satisfy the strength design provisions of ACI 318-14 Chapter 17 / ACI 318-11 Appendix D, CAN / CSA A23.3 Annex D, ETAG 001 Annex C or EOTA TR029 design methodologies. Anchor Designer will quickly and accurately analyze an existing design or suggest anchorage solutions based upon user-defined design elements in cracked and uncracked concrete conditions.

The real-time design is visually represented in a fully-interactive 3D graphic user interface, supports Imperial and Metric-sized Simpson Strong-Tie mechanical and adhesive anchors, and offers cast-in-place anchor solutions. Anchor Designer can calculate single anchor solutions or up to 16 anchors in a single plate.

Additional features include:

- Easy-to-use menus.
- Ability to calculate single anchor model or to calculate multiple anchor models at once.
- Multi-lingual options include English, German, French, Spanish, Polish and Danish languages.
- Rectangular and circular base plate geometries with the option to include slotted holes.
- And much more!

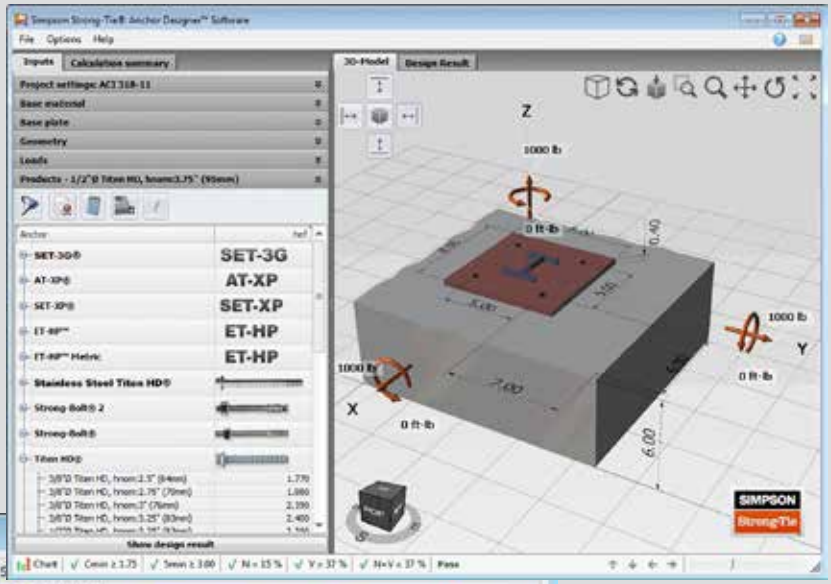


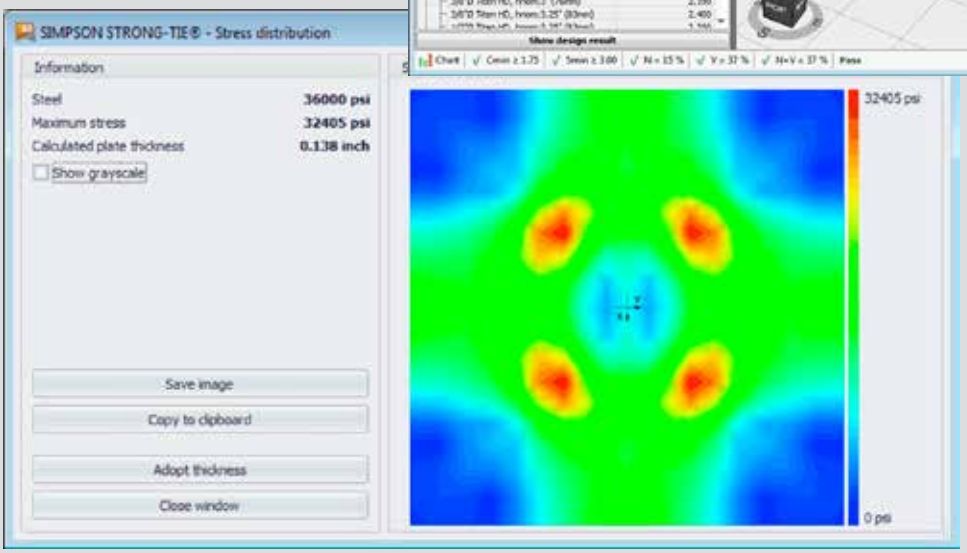


Visit: **strongtie.com/softwareandwebapplications/category.**



C-CF-2020 ©2020 SIMPSON STRONG-TIE COMPANY INC.

# Fasteners

# Simpson Strong-Tie® Fasteners for CFS Construction

Below is a general list of Simpson Strong-Tie anchors and suitable substrate. This is not all of Simpson Strong-Tie anchorages but a list of the most suitable anchors for cold-formed steel construction.

✓ = Code listed ✓ = Tested in base material — = Not tested in base material

| | Product | | | Single/ Collated | Tested Base Materials | | | | | |
|---|---|---|---|---|---|---|---|---|---|---|
| | | | | | CFS to CFS | CFS to Structural Steel | Sheathing to CFS | Dens Glass to CFS | Drywall to CFS | Wood to CFS |
| Screws | Strong-Drive® XL **LARGE-HEAD METAL** Screw | 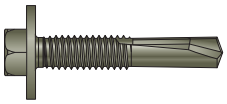 | #12 hex head L = 1¼" | Single/ collated | ✓ | ✓ | — | — | — | — |
| | Strong-Drive XM **MEDIUM-HEAD METAL** Screw | 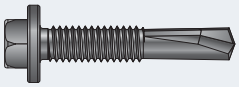 | #12 hex head L = 1¼" | Single/ collated | ✓ | ✓ | — | — | — | — |
| | Strong-Drive XE **EXTERIOR STRUCTURAL METAL** Screw | | #10 hex head L = ¾" | Single/ collated | ✓ | — | — | — | — | — |
| | Strong-Drive FPHSD **FRAMING-TO-CFS** Screw | | #10, #12 flat pan head L = ¾" | Single | ✓ | — | — | — | — | — |
| | Strong-Drive PPSD **SHEATHING-TO-CFS** Screw | | #8, #10, #12 flat head L = 1¾" to 3" | Single/ collated | — | — | ✓ | ✓ | — | — |
| | Strong-Drive **SELF-DRILLING X METAL** Screw | | #10, #12 hex head L = ¾" to 1½" | Single | ✓ | ✓ | — | — | — | — |
| | Strong-Drive TB **WOOD-TO-STEEL** Screw | | #12, #14 flat head L = 1¾" to 3" | Single/ collated | — | — | — | — | — | ✓ |
| | Self-Drilling E Metal Screw | 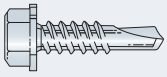 | #14 hex head L = 1" | Single | ✓ | ✓ | — | — | — | — |
| | DWFSD Drywall-to-CFS Screw | | #6, #8 bugle head L = 1¼" to 2" | Collated | — | — | — | ✓ | ✓ | — |
| | CBSDQ Sheathing-to-CFS Screw | | #8, #10 ribbed flat head L = 1⅝" to 2¼" | Collated | — | — | ✓ | — | — | — |
| | DWF Drywall-to-CFS Screw | | #6 bugle head L = 1¼" to 1⅝" | Collated | — | — | — | — | ✓ | — |
| | PHSD Framing-to-CFS Screw | | #8 pan head L = ¾" | Collated | ✓ | — | — | — | — | — |

Reference **strongtie.com** or *Fastening Systems* catalog (C-F-2019) for more information on Simpson Strong-Tie fasteners.



C-CF-2020 ©2020 SIMPSON STRONG-TIE COMPANY INC.

# Holdowns and Tension Ties

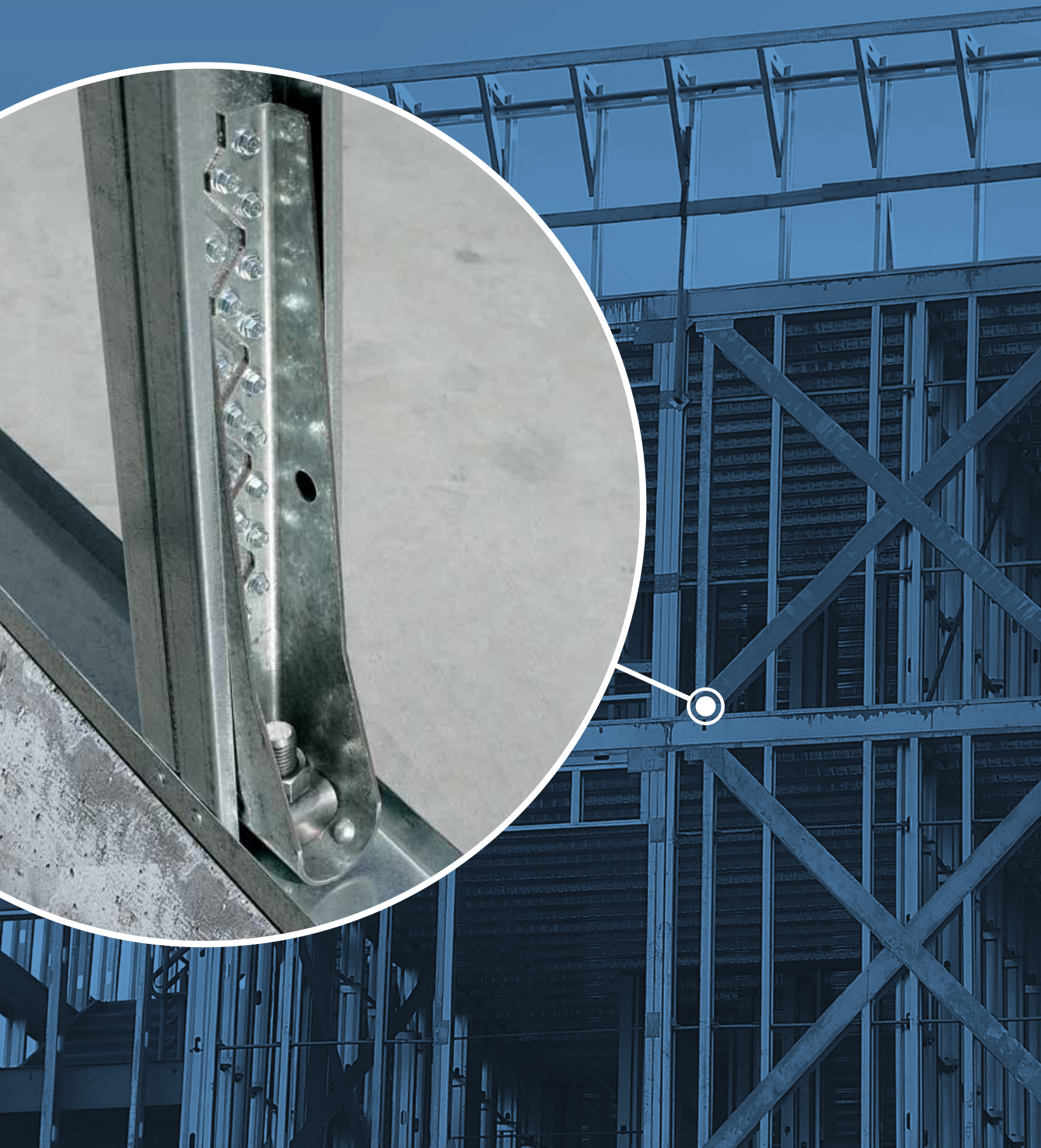

# S/HDU Holdowns

The S/HDU series of holdowns combines performance with ease of installation. The pre-deflected geometry virtually eliminates material stretch, resulting in low deflection under load. Installation using self-drilling screws into the studs reduces installation time and saves labor cost.

**Material:** 118 mil (10 ga.)

**Finish:** Galvanized (G90)

**Installation:**

- Use all specified fasteners; see General Notes
- Use standard #14 self-drilling screws to fasten to studs
- Anchor bolt washer is not required
- See SB, SSTB and PAB anchor bolts on pp. 163–164 for cast-in-place anchorage options
- See SET-XP® and AT-XP® adhesive products at **strongtie.com** for anchor bolt retrofit options

**Codes:** See p. 11 for Code Reference Key Chart

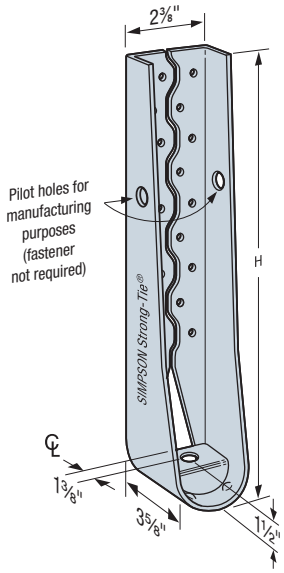


**S/HDU**
US Patents 5,979,130 and 6,112,495

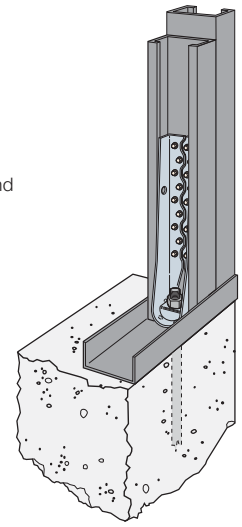

Typical S/HDU Installation

| Model | H (in.) | Fasteners: Anchor Bolt Diameter[1] (in.) | Fasteners: Stud Fasteners[7] | Stud Member Thickness[2] mil (ga.) | ASD (lb.): Tension Load | ASD (lb.): Deflection at ASD Load[5] | LRFD (lb.): Tension Load | LRFD (lb.): Deflection at LRFD Load[5] | Nominal Tension Load[6] (lb.) | Code Ref. |
|---|---|---|---|---|---|---|---|---|---|---|
| S/HDU4 | 7⅞ | ⅝ | (6) #14 | 2–33 (2–20) | 2,320 | 0.093 | 3,705 | 0.149 | 5,685 | IBC, FL, LA |
| | | | | 2–43 (2–18) | 3,825 | 0.115 | 6,105 | 0.190 | 9,365 | |
| | | | | 2–54 (2–16) | 3,970 | 0.093 | 6,345 | 0.156 | 9,730 | |
| | | | | Steel fixture | 4,470 | 0.063 | 7,165 | 0.103 | 12,120 | |
| S/HDU6 | 10⅜ | ⅝ | (12) #14 | 2–33 (2–20) | 4,895 | 0.125 | 8,495 | 0.250 | 10,470 | |
| | | | | 2–43 (2–18) | 6,125 | 0.119 | 9,690 | 0.250 | 15,460 | |
| | | | | 2–54 (2–16) | 6,125 | 0.108 | 9,785 | 0.234 | 15,005 | |
| | | | | Steel fixture | 5,995 | 0.060 | 9,580 | 0.136 | 14,695 | |
| S/HDU9 | 12⅞ | ⅞ | (18) #14 | 2–33 (2–20) | 6,965 | 0.103 | 11,125 | 0.189 | 13,165 | |
| | | | | 2–43 (2–18) | 9,255 | 0.125 | 15,485 | 0.250 | 21,810 | |
| | | | | 2–54 (2–16) | 9,990 | 0.106 | 15,960 | 0.225 | 24,480 | |
| | | | | Steel fixture | 12,715 | 0.125 | 20,510 | 0.177 | 31,455 | |
| S/HDU11 | 16⅝ | ⅞ | (27) #14 | 2–33 (2–20) | 6,965 | 0.103 | 11,125 | 0.189 | 13,165 | |
| | | | | 2–43 (2–18) | 9,595 | 0.096 | 15,330 | 0.162 | 23,515 | |
| | | | | 2–54 (2–16) | 9,675 | 0.110 | 15,460 | 0.158 | 23,710 | |
| | | ⅞ with heavy hex nut | (27) #14 | 2–43 (2–18)[6] | 11,100 | 0.125 | 17,500 | 0.250 | 24,955 | |
| | | | | 2–54 (2–16)[6] | 12,175 | 0.125 | 19,445 | 0.243 | 29,825 | |
| | | | | Steel fixture[6] | 12,945 | 0.111 | 20,680 | 0.163 | 31,715 | |

These products are available with additional corrosion protection. Additional products on this page may also be available with this option. Check with Simpson Strong-Tie for details.

1. The designer shall specify the foundation anchor material type, embedment and configuration. Some of the tabulated holdown tension loads exceed the tension strength of typical ASTM A36 or A307 anchor bolts.
2. Stud design by specifier. Tabulated loads are based on a minimum stud thickness for fastener connection.
3. ¼" self-drilling screws may be substituted for #14 self-tapping screws.
4. A heavy hex nut for the anchor bolt is required to achieve the table loads for S/HDU11.
5. Deflection at ASD or LRFD includes fastener slip, holdown deformation and anchor rod elongation for holdowns installed up to 4" above top of concrete. Holdowns may be installed raised, up to 18" above top of concrete, with no load reduction provided that additional elongation of the anchor rod is accounted for.
6. The Nominal Tension Load is based on the tested average ultimate (peak) load and is provided for design in accordance with section C5 of AISI S213 that requires a holdown to have a nominal strength to resist the lesser of the amplified seismic load or the maximum force the system can deliver.
7. See *Fastening Systems* catalog (C-F-2019) on **strongtie.com** for more information on Simpson Strong-Tie fasteners.

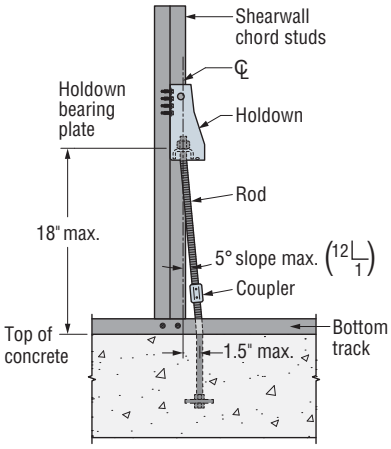


Holdown Raised Off CFS Bottom Track

Typical S/HDU Floor-to-Floor Installation

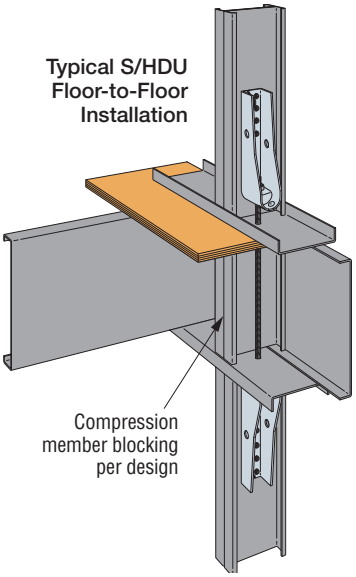




C-CF-2020 ©2020 SIMPSON STRONG-TIE COMPANY INC.

# **S/LTT, S/DTT and HTT** Tension Ties

The HTT is a single-piece formed tension tie — no rivets, and a 4-ply formed seat. No washers are required.

S/DTT2Z tension tie is suitable for lighter-duty hold-down applications on single or back-to-back studs, and installed easily with #14 self-drilling screws.

The HTT, S/DTT and S/LTT tension ties are ideal for retrofit or new construction projects. They provide high-strength, post-pour, concrete-to-steel connections.

**Material:** HTT — 111 mil (11 ga.)
DTT1Z, S/DTT2Z — 68 mil (14 ga.)
S/LTT20 — Strap: 97 mil (12 ga.);
Plate: 229 mil (3 ga.)

**Finish:** HTT, S/LTT — Galvanized (G90);
DTT1Z, S/DTT2Z — ZMAX® coating

**Installation:**

- Use all specified fasteners.
- Use the specified number of type of screws to attach the strap portion to the steel stud. Bolt the base to the wall or foundation with a suitable anchor; see table for the required bolt diameter.
- S/DTT2Z requires a standard cut washer (included) be installed between the nut and the seat.
- Do not install S/LTT20 raised off of the bottom track.
- See SB and SSTB Anchor Bolts on p. 163 for anchorage options.
- See SET-XP® and AT-XP® adhesive products at **strongtie.com** for anchor bolt retrofit options.

**Codes:** See p. 11 for Code Reference Key Chart

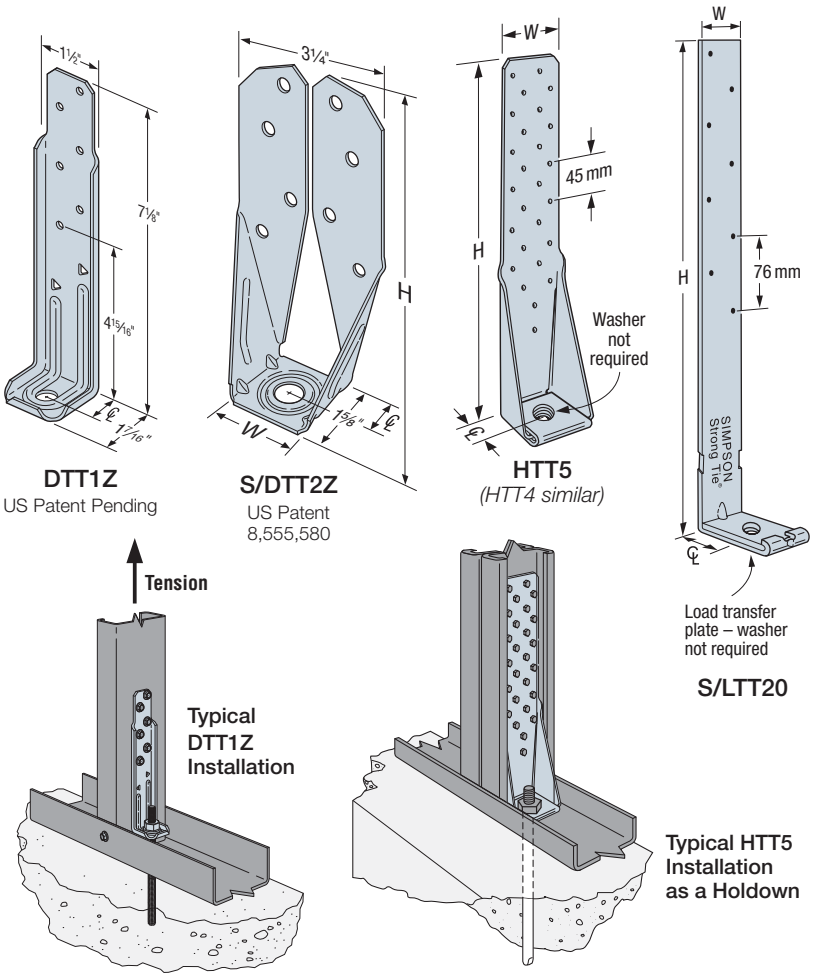


| Model | Dimensions (in.) | | | Fasteners | | Stud Member Thickness mil (ga.) | ASD (lb.) | | LRFD (lb.) | | Nominal Tension Load[4] (lb.) | Code Ref. |
|---|---|---|---|---|---|---|---|---|---|---|---|---|
| | W | H | ℄ | Anchor Bolt Diameter[1] (in.) | Stud Fasteners[5] | | Tension Load | Deflection at ASD Load[3] | Tension Load | Deflection at LRFD Load[3] | | |
| DTT1Z | 1½ | 7⅛ | ¾ | ⅜ | (6) #10 | 33 (20) | 905 | 0.156 | 1,270 | 0.250 | 3,485 | IBC, FL, LA |
| S/LTT20 | 2 | 20 | 1½ | ½ | (8) #10 | 33 (20) | 1,200 | 0.125 | 1,890 | 0.250 | 4,625 | |
| S/DTT2Z | 1⅝ | 6¹⁵⁄₁₆ | 1³⁄₁₆ | ½ | (8) #14 | 33 (20) | 1,570 | 0.138 | 2,200 | 0.250 | 4,265 | |
| | | | | | | 43 (18) | 1,685 | 0.151 | 2,355 | 0.250 | 5,570 | |
| | | | | | | 2–33 (2–20) | 1,735 | 0.153 | 2,430 | 0.250 | 5,735 | |
| HTT4 | 2½ | 12⅜ | 1⅜ | ⅝ | (18) #10 | 33 (20) | 3,180 | 0.104 | 4,770 | 0.187 | 8,215 | |
| | | | | | | 2–33 (2–20) | 4,395 | 0.125 | 6,675 | 0.250 | 11,835 | |
| HTT5 | 2½ | 16 | 1⅜ | ⅝ | (26) #10 | 43 (18) | 4,240 | 0.125 | 6,505 | 0.250 | 11,585 | |
| | | | | | | 2–43 (2–18) | 4,670 | 0.125 | 6,970 | 0.250 | 12,195 | |
| | | | | | | 1–54 (1–16) | 4,150 | 0.125 | 6,425 | 0.250 | 12,365 | |

These products are available with additional corrosion protection. Additional products on this page may also be available with this option. Check with Simpson Strong-Tie for details.

1. The designer shall specify the foundation anchor material type, embedment and configuration.
2. Stud design by specifier. Tabulated loads are based on a minimum stud thickness for fastener connection.
3. Deflection at ASD or LRFD includes fastener slip, holdown deformation and anchor rod elongation for holdowns installed up to 4" above top of concrete. Holdowns may be installed raised, up to 18" above top of concrete, with no load reduction provided that additional elongation of the anchor rod is accounted for. See bottom of p. 169 for installation detail.
4. The Nominal Tension Load is based on the tested average ultimate (peak) load and is provided for design in accordance with section C5 of AISI S213 that requires a tension tie to have a nominal strength to resist the lesser of the amplified seismic load or the maximum force the system can deliver.
5. See *Fastening Systems* catalog (C-F-2019) on **strongtie.com** for more information on Simpson Strong-Tie fasteners.



C-CF-2020 ©2020 SIMPSON STRONG-TIE COMPANY INC.

# S/HDS and S/HDB Holdowns

The S/HD series of holdowns is designed for installation with either screws or bolts into the studs or column. The S/HDS series installs with #14 screws and has been designed to utilize fewer fasteners to reduce installation time. The S/HDB series is ideal for bolt-on applications where the cold-formed stud manufacturer can prepunch the bolt holes.

**Material:** See table

**Finish:** Simpson Strong-Tie® gray paint. Hot-dip galvanized is available; see Corrosion-Information, pp. 17–19.

**Installation:**

- Use all specified fasteners; some models have extra fastener holes. See General Notes.
- Anchor bolt washer is not required.
- Standard washers are required on stud bolt nuts for model S/HDB.
- Thin wall socket (OD = 2" maximum) is required for S/HD15 to tighten the 1" anchor bolt.
- Stud bolts — use A307.
- Boundary members (back-to-back studs) design shall be by designer.
- S/HDS and S/HDB holdowns can be welded per designer's recommendation and specification. To tie back-to-back stud members together, the designer must determine the fasteners required to bind members to act as one unit. Welders and welding procedures shall be qualified as specified in AWS D1.3. Welded connections used for cold-formed steel structural members in which the thickness of the thinnest connected part is 0.18 inch or less shall comply to AISI S100 Specification Section E2.
- See SB, SSTB and PAB Anchor Bolts on pp. 163–164 for anchorage options.
- See SET-XP® and AT-XP® adhesive products at **strongtie.com** for anchor bolt retrofit options.

**Codes:** See p. 11 for Code Reference Key Chart

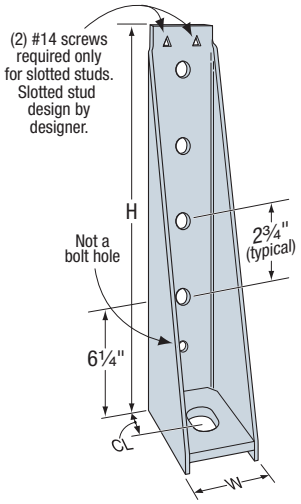


**S/HD15B**

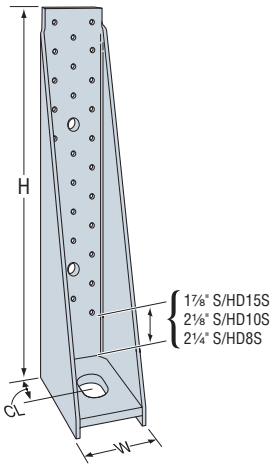


**S/HD15S**
*(S/HD8S and S/HD10S similar)*

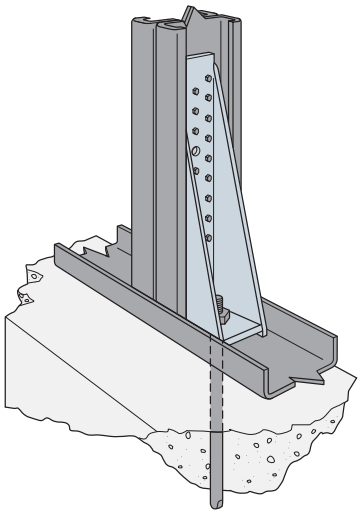

**Typical S/HD10S Back-to-Back Stud Installation**

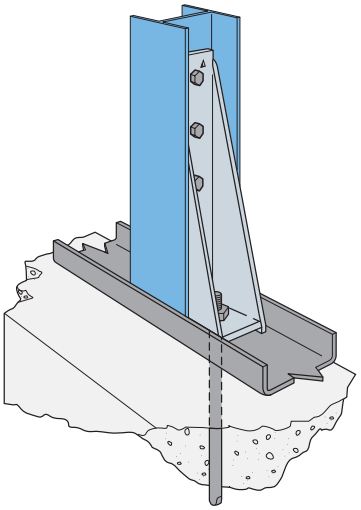

**Typical S/HD10B PACO Column Installation**
*See Code Report*

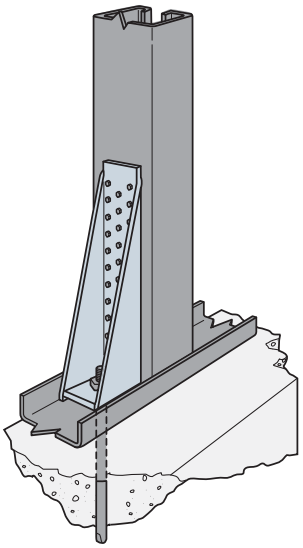

**Typical S/HD10S Heavy-Duty (Large Flange) Stud Application**
*See Code Report*



C-CF-2020 ©2020 SIMPSON STRONG-TIE COMPANY INC.

# **S/HDS and S/HDB** Holdowns

SIMPSON Strong-Tie®

| Model No. | Mil (ga.) | H (in.) | W (in.) | ℄ (in.) | Fasteners: Anchor Bolt Dia.[1] (in.) | Fasteners: Stud Fasteners[7] | Stud Member Thickness mil (ga.) | ASD (lb.): Tension Load | ASD (lb.): Deflection at ASD Load[4] | LRFD (lb.): Tension Load | LRFD (lb.): Deflection at LRFD Load[4] | Nominal Tension Load (lb.) | Code Ref. |
|---|---|---|---|---|---|---|---|---|---|---|---|---|---|
| S/HD8S | 118 (10) | 11 | 2 5/16 | 1 1/2 | 7/8 | (17) #14[7] | 2–33 (2–20) | 7,335 | 0.12 | 11,715 | 0.204 | 13,720 | IBC, FL, LA |
| | | | | | | | 2–43 (2–18) | 8,750 | 0.086 | 13,975 | 0.146 | 21,435 | |
| | | | | | | | 2–54 (2–16) | 8,855 | 0.106 | 14,145 | 0.162 | 21,700 | |
| | | | | | | | Steel fixture | 10,840 | 0.053 | 17,335 | 0.072 | 32,525 | |
| S/HD10S | 118 (10) | 13 1/2 | 2 5/16 | 1 1/2 | 7/8 | (22) #14[7] | 2–33 (2–20) | 7,400 | 0.122 | 11,815 | 0.192 | 13,835 | |
| | | | | | | | 2–43 (2–18) | 11,120 | 0.112 | 17,755 | 0.124 | 20,795 | |
| | | | | | | | 2–54 (2–16) | 12,220 | 0.096 | 19,520 | 0.145 | 29,940 | |
| | | | | | | | Steel fixture | 12,375 | 0.043 | 19,820 | 0.061 | 33,535 | |
| S/HD15S | 171 (7) | 17 | 2 5/16 | 1 9/16 | 1 | (30) #14[7] | 2–43 (2–18) | 12,110 | 0.096 | 19,340 | 0.164 | 22,645 | |
| | | | | | | | 2–54 (2–16) | 13,500 | 0.11 | 21,565 | 0.13 | 33,075 | |
| | | | | | | | Steel fixture | 15,810 | 0.043 | 25,320 | 0.065 | 42,845 | |
| S/HD8B | 171 (7) | 11 | 2 5/16 | 1 1/2 | 7/8 | (2) 3/4" dia. | 2–33 (2–20) | 3,895 | 0.081 | 5,620 | 0.144 | 8,645 | |
| | | | | | | | 2–43 (2–18) | 5,345 | 0.098 | 7,710 | 0.146 | 11,865 | |
| | | | | | | | 2–54 (2–16) | 8,950 | 0.082 | 14,280 | 0.141 | 20,310 | |
| | | | | | | | Steel fixture | 9,080 | 0.069 | 14,545 | 0.104 | 22,975 | |
| S/HD10B | 118 (10) | 13 1/2 | 2 5/16 | 1 1/2 | 7/8 | (3) 3/4" dia. | 2–33 (2–20) | 5,840 | 0.070 | 8,430 | 0.124 | 12,970 | |
| | | | | | | | 2–43 (2–18) | 8,015 | 0.087 | 11,565 | 0.12 | 17,795 | |
| | | | | | | | 2–54 (2–16) | 12,090 | 0.125 | 19,720 | 0.23 | 28,050 | |
| | | | | | | | Steel fixture | 15,635 | 0.102 | 24,955 | 0.123 | 35,495 | |
| S/HD15B | 171 (7) | 17 | 2 5/16 | 1 9/16 | 1 | (4) 3/4" dia. | 2–43 (2–18) | 16,020 | 0.118 | 15,425 | 0.179 | 22,165 | |
| | | | | | | | 2–54 (2–16) | 16,020 | 0.090 | 25,565 | 0.121 | 36,360 | |
| | | | | | | | Steel fixture | 18,690 | 0.104 | 29,825 | 0.139 | 42,425 | |

These products are available with additional corrosion protection. Additional products on this page may also be available with this option. Check with Simpson Strong-Tie for details.

1. The designer shall specify the foundation anchor material type, embedment and configuration. Some of the tabulated holdown tension loads exceed the tension strength of typical ASTM A36 or A307 anchor bolts.
2. Stud design by specifier. Tabulated loads are based on a minimum stud thickness for fastener connection.
3. 1/4" self-drilling screws may be substituted for #14 self-tapping screws.
4. Deflection at ASD or LRFD includes fastener slip, holdown deformation and anchor rod elongation for holdowns installed up to 4" above top of concrete. Holdowns may be installed raised, up to 18" above top of concrete, with no load reduction provided that additional elongation of the anchor rod is accounted for. See bottom of p. 169 for installation detail.
5. The Nominal Tension Load is based on the tested average ultimate (peak) load and is provided for design in accordance with section C5 of AISI S213 that requires a holdown to have a nominal strength to resist the lesser of the amplified seismic load or the maximum force the system can deliver.
6. Not all fastener holes for S/HDS holdowns need to be filled, as additional fastener holes provided. Install fasteners symmetrically.
7. See *Fastening Systems* catalog (C-F-2019) on **strongtie.com** for more information on Simpson Strong-Tie fasteners.



C-CF-2020 ©2020 SIMPSON STRONG-TIE COMPANY INC.

# **PA/HPA** Purlin Anchors

PA/HPA purlin anchors offer solutions for CFS to concrete and concrete block connections which satisfy code requirements. The HPA offers the highest capacity in concrete. The PAs dual embedment line allows installation in concrete or concrete block.

**Material:** PA — 12 gauge; HPA — 10 gauge

**Finish:** Galvanized. PAs available in HDG or ZMAX® coating.

**Installation:**

- Use all specified fasteners; some models have extra fastener holes. See General Notes.
- Purlin anchor must hook around rebar.
- Allowable loads are for a horizontal installation into the side of a concrete or masonry wall.
- Strap may be bent one full cycle. (Bent vertical 90° then bent horizontal.)

**Edge Distance** — Minimum concrete edge distance is 5". Minimum concrete block left-to-right edge distance is 20".

**Concrete Block Wall** — The minimum wall specifications are:

A One #4 vertical rebar, 32" long, 16" each side of anchor.

B Two courses of grout filled block above and below the anchor (no cold joints allowed).

C A horizontal bond beam with two #4 rebars, 40" long, a maximum of two courses above or below the anchor.

D Minimum masonry compressive strength, $f'_m$ = 1,500 psi.

**Options:** See S/LTT and HTT Tension Ties for alternate retrofit solutions

**Codes:** See p. 11 for Code Reference Key Chart

**ASCE 12.11.2.2.5 states:**

*... Diaphragm to structural wall anchorage using embedded straps shall have the straps attached to, or hooked around the reinforcing steel or otherwise terminated to effectively transfer forces to the reinforcing steel.*

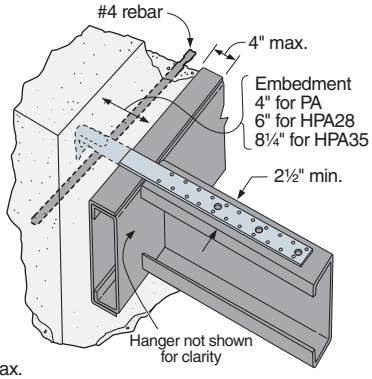


PA/HPA Purlin to Concrete Wall Single C-Shape Joist Installation

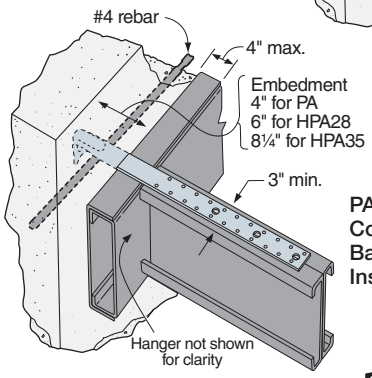


PA/HPA Purlin to Concrete Wall Back-to-Back Joist Installation

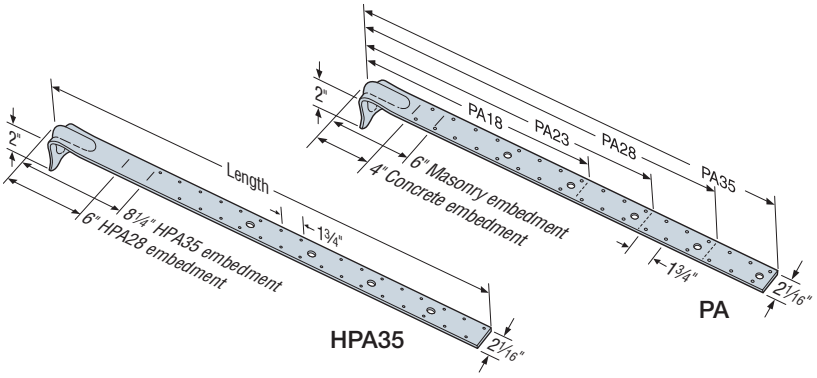


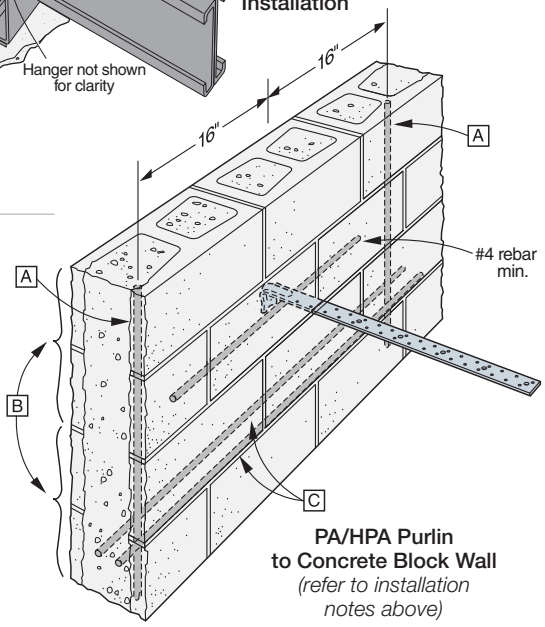


PA/HPA Purlin to Concrete Block Wall *(refer to installation notes above)*

| Model No. | Strap Length L (in.) | $l_e$[8] (in.) | Fasteners[8] Rafter/Stud /Joist Thickness 33 mil (20 ga.) | 43 mil (18 ga.) | 54 mil (16 ga.) | Non Cracked Tension Load | Cracked Tension Load | Max. Allowable Strap Tensile Capacity | Masonry Installation Tension Load | Code Ref. |
|---|---|---|---|---|---|---|---|---|---|---|
| **Wind and SDC A&B — Allowable Load (lb.)** | | | | | | | | | | |
| PA18 | 18½ | 4 | (16) #10 | (16) #10 | (8) #10 | 2,430 | 2,260 | NA | 1,895 | IBC |
| PA23 | 23¾ | 4 | (22) #10 | (16) #10 | (8) #10 | 3,220 | 2,260 | NA | 2,815 | |
| PA28 | 29 | 4 | (22) #10 | (16) #10 | (8) #10 | 3,230 | 2,260 | NA | 2,815 | |
| PA35 | 35 | 4 | (22) #10 | (16) #10 | (8) #10 | 3,230 | 2,260 | NA | 2,815 | |
| HPA28 | 32½ | 6 | (28) #10 | (20) #10 | (10) #10 | 5,145 | 4,675 | NA | — | |
| HPA35 | 38½ | 8¼ | (32) #10 | (22) #10 | (12) #10 | 5,145 | 5,145 | NA | — | |
| **SDC C–F — Allowable Load (lb.)** | | | | | | | | | | |
| PA18 | 18½ | 4 | (16) #10 | (16) #10 | (8) #10 | 2,340 | 1,980 | 3,220 | 1,895 | |
| PA23 | 23¾ | 4 | (22) #10 | (16) #10 | (8) #10 | 2,830 | 1,980 | 3,220 | 2,815 | |
| PA28 | 29 | 4 | (22) #10 | (16) #10 | (8) #10 | 2,830 | 1,980 | 3,935 | 2,815 | |
| PA35 | 35 | 4 | (22) #10 | (16) #10 | (8) #10 | 2,830 | 1,980 | 3,935 | 2,815 | |
| HPA28 | 32½ | 6 | (28) #10 | (20) #10 | (10) #10 | 5,145 | 4,090 | 5,145 | — | |
| HPA35 | 38½ | 8¼ | (32) #10 | (22) #10 | (12) #10 | 5,145 | 5,145 | 5,145 | — | |

These products are available with additional corrosion protection. Additional products on this page may also be available with this option. Check with Simpson Strong-Tie for details.

1. Loads may not be increased for short-term loading.
2. For concrete installs, the minimum compressive strength, $f'_c$ = 3,000 psi.
3. Multiply Seismic and Wind ASD load values by 1.4 or 1.67, respectively, to obtain LRFD capacities.
4. In accordance with 2012, 2015 and 2018 IBC Section 1613.1, detached one- and two-family dwellings in Seismic Design Category (SDC) C may use "Wind and SDC A&B" allowable loads.
5. Minimum center-to-center spacing is 3 times the required embedment ($S_{min} = 3 \times l_e$) for PA/HPAs acting in tension simultaneously, where $l_e$ = embedment depth. Standard installation is based on minimum 5" end distance.
6. Install fasteners symmetrically and with a minimum of 4 of the required fasteners between the embedment line and the first tooling hole. In some cases, not all of the fastener holes will need to be filled.
7. Per ASCE7-10, 12.11.2.2.2, for diaphragms in structures assigned to SDC C–F, maximum allowable strap tensile capacity shall be no less than 1.4 times the design load. Not applicable (NA) for Wind and SDC A&B designs.
8. For PA straps, concrete embedment shown; embedment in masonry shall be 6".
9. See *Fastening Systems* catalog (C-F-2019) on **strongtie.com** for more information on Simpson Strong-Tie fasteners.



C-CF-2020 ©2020 SIMPSON STRONG-TIE COMPANY INC.

# **STHD/LSTHD** Strap Tie Holdowns

SIMPSON Strong-Tie®

***This product is preferable to similar connectors because of a) easier installation, b) higher loads, c) lower installed cost, or a combination of these features.***

The STHD is an embedded strap-tie holdown offering high-load capacity. The STHD incorporates many features that aid correct installation and improve performance. When installed on the forms with the StrapMate® strap holder, the unique design of the STHD delivers enhanced stability before and during the pour to help prevent both parallel and perpendicular movement (relative to the form). This results in accurate positioning of the strap and reduced possibility of spalling.

**Features**

- The fastener pattern allows for fastening to the edges of back-to-back studs
- Strap nail slots are countersunk to provide a lower nail head profile
- The slots below the embedment line enable increased front-to-back concrete bond and help to reduce spalling
- Rim joist models accommodate up to a 17" clear span without any loss of strap fastening

**Material:** LSTHD8, LSTHD8RJ — 14 gauge, all others — 12 gauge

**Finish:** Galvanized

**Installation:** • Use all specified fasteners; see General Notes.

- Use table below for both standard concrete and post-tension slab installations.
- Install before concrete pour with a StrapMate® or other holding device.
- Fasten strap from the bottom up.
- Strap may be bent one full cycle (bent horizontal 90° then bent vertical) to aid wall placement, but may cause spalling behind the strap. If the spall is 1" or less, measured from the embedment line to the bottom of the spall, full loads apply. 1" to 4" spalls for LSTHD8 achieve 0.9 times table loads. STHD10 and STHD14 achieve full load for spalls less than 4". Any portion of the strap left exposed should be protected against corrosion.
- Other than where noted in the two-pour detail, do not install where: (a) a horizontal cold joint exists within the embedment depth between the slab and foundation wall or footing beneath, unless provisions are made to transfer the load, or the slab is designed to resist the load imposed by the anchor; or (b) slabs are poured over concrete block foundation walls.
- Additional studs attached to the shearwall studs or post may be required by the designer for wall sheathing fastening.
- For installation in severe corrosion environments, refer to **strongtie.com/cipcorrosion** for additional considerations.

**Codes:** See p. 11 for Code Reference Key Chart

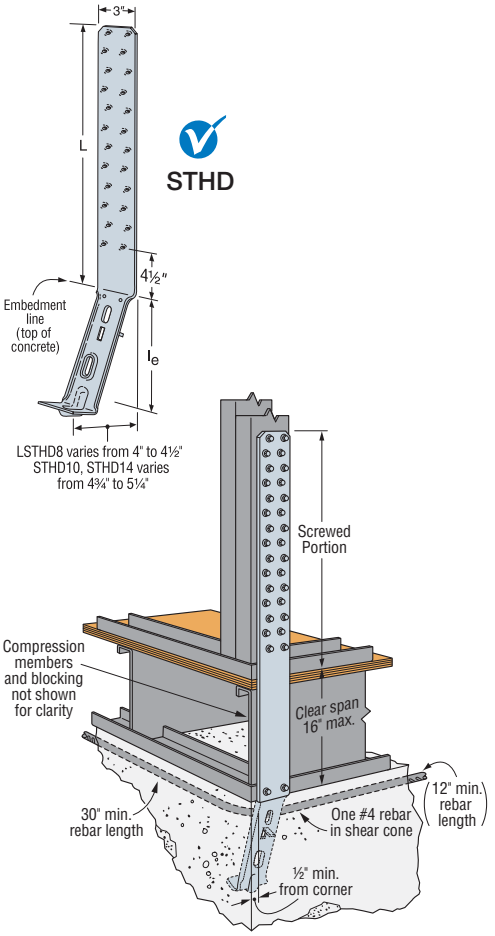


**Typical STHD14RJ Rim Joist Application**

## Allowable Stress Design (ASD) Loads for STHD Strap Style Hold-Downs on CFS — 2,500 psi Concrete

| Wind and SDC A & B — Allowable Tension Loads (lb.) — 33 mil (20 ga.) Studs | | | | | | | | | | | | | | | Code Ref. |
|---|---|---|---|---|---|---|---|---|---|---|---|---|---|---|---|
| Min. Stem Wall (in.) | Model No. | | Strap Length (L) | | le (in.) | Non-Cracked | | | | Cracked | | | | | |
| | Standard | Rim Joist | Standard (in.) | Rim Joist (in.) | | Req'd Screws | Midwall | Corner | Endwall | Req'd Screws | Midwall | Corner | Endwall | | |
| 6 | LSTHD8 | LSTHD8RJ | 18⅝ | 32⅛ | 8 | (20) #10 | 2,985 | 2,590 | 1,620 | (16) #10 | 2,565 | 2,225 | 1,395 | | IBC, LA, FL |
| | STHD10 | STHD10RJ | 24⅝ | 38⅛ | 10 | (24) #10 | 3,535 | 3,535 | 1,960 | (22) #10 | 2,910 | 2,910 | 1,635 | | |
| | STHD14 | STHD14RJ | 26⅛ | 39⅝ | 14 | (30) #10 | 4,935 | 4,935 | 3,065 | (30) #10 | 4,935 | 4,935 | 3,065 | | |
| 8 | LSTHD8 | LSTHD8RJ | 18⅝ | 32⅛ | 8 | (20) #10 | 2,985 | 2,590 | 2,135 | (16) #10 | 2,565 | 2,225 | 1,835 | | |
| | STHD10 | STHD10RJ | 24⅝ | 38⅛ | 10 | (28) #10 | 4,755 | 4,075 | 3,015 | (22) #10 | 4,020 | 3,350 | 2,480 | | |
| | STHD14 | STHD14RJ | 26⅛ | 39⅝ | 14 | (30) #10 | 5,285 | 5,285 | 4,410 | (30) #10 | 5,285 | 5,285 | 4,410 | | |
| SDC C–F — Allowable Tension Loads (lb.) — 33 mil (20 ga.) Studs | | | | | | | | | | | | | | | |
| Min. Stem Wall (in.) | Model No. | | Strap Length (L) | | le (in.) | Non-Cracked | | | | Cracked | | | | | |
| | Standard | Rim Joist | Standard (in.) | Rim Joist (in.) | | Req'd Screws | Midwall | Corner | Endwall | Req'd Screws | Midwall | Corner | Endwall | | |
| 6 | LSTHD8 | LSTHD8RJ | 18⅝ | 32⅛ | 8 | (16) #10 | 2,270 | 2,090 | 1,220 | (14) #10 | 2,250 | 1,950 | 1,220 | | |
| | STHD10 | STHD10RJ | 24⅝ | 38⅛ | 10 | (18) #10 | 2,750 | 2,750 | 1,615 | (18) #10 | 2,550 | 2,550 | 1,435 | | |
| | STHD14 | STHD14RJ | 26⅛ | 39⅝ | 14 | (22) #10 | 3,695 | 3,695 | 2,685 | (22) #10 | 3,695 | 3,695 | 2,685 | | |
| 8 | LSTHD8 | LSTHD8RJ | 18⅝ | 32⅛ | 8 | (16) #10 | 2,615 | 2,125 | 1,635 | (14) #10 | 2,250 | 1,950 | 1,610 | | |
| | STHD10 | STHD10RJ | 24⅝ | 38⅛ | 10 | (20) #10 | 3,400 | 2,940 | 2,295 | (20) #10 | 3,400 | 2,940 | 2,175 | | |
| | STHD14 | STHD14RJ | 26⅛ | 39⅝ | 14 | (24) #10 | 3,815 | 3,815 | 3,500 | (24) #10 | 3,815 | 3,815 | 3,500 | | |

1. Deflection at highest allowable loads for install over CFS double studs are as follows: LSTHD8 = 0.065", STHD10 = 0.096" and STHD14 = 0.115".
2. Multiply Seismic and Wind ASD load values by 1.4 or 1.67, respectively, to obtain LRFD capacities.
3. Per 2012, 2015 and 2018 IBC Section 1613, detached one- and two- family dwellings assigned to Seismic Design Category (SDC) A, B or C are exempt from the seismic design provisions of IBC Section 1613. For this case, the allowable wind loads apply.
4. Minimum center-to-center spacing is 3 times the required embedment ($S_{min} = 3 \times l_e$) for STHD's acting in tension simultaneously. Midwall install is based on 1.5 x $l_e$ end distance.
5. See *Fastening Systems* catalog (C-F-2019) on **strongtie.com** for more information on Simpson Strong-Tie fasteners.



C-CF-2020 ©2020 SIMPSON STRONG-TIE COMPANY INC.

# **STHD/LSTHD** Strap Tie Holdowns

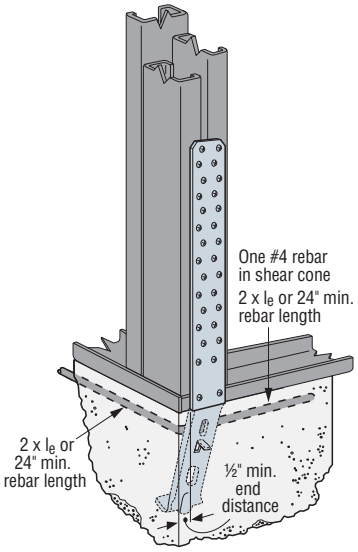


**Typical STHD14 Corner Installation on Three Studs**
*(end of wall similar)*

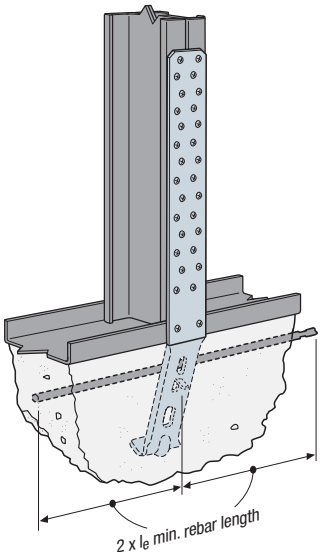


**Typical STHD14 Mid-Wall Installation**

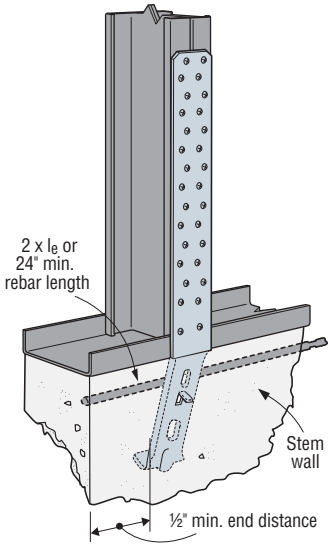


**Typical STHD End Installation**

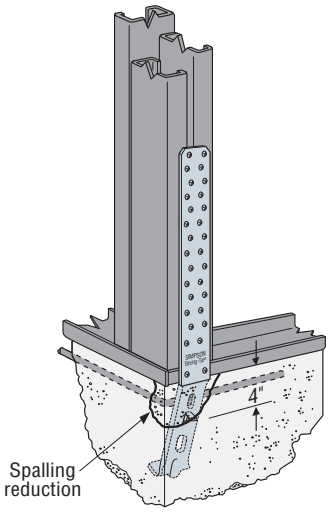


**Spalling Load Reduction**
If strap is bent horizontal 90° during installation, and then bent vertical for fastening to the stud, concrete spalling could result. Load reductions may apply, see installation note.

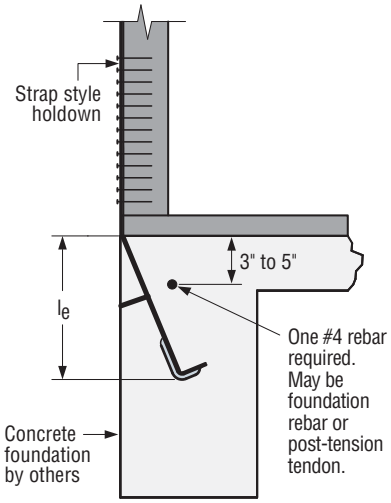


**Single-Pour Rebar Installation**
*Maintain minimum rebar cover, per ACI-318 concrete code requirements.*

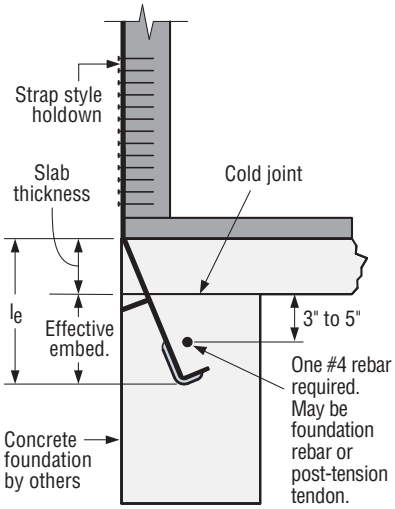


**Two-Pour Installation for Downturn Footings**

## Spall Reduction System for STHD Holdown

**Features**
- Built-in tab
- StrapMate® locator line
- Additional diamond hole in RJ versions

**Benefits**

**Built-in Tab:**
- Reduces spalling and costly retrofits.
- No additional labor to install.
- Holds STHD away from form board.

**StrapMate Locator Line:**
- Easy inspection to ensure proper location.
- Allows adjustment without removing STHD.

**Additional Diamond Hole:**
- One more fastener to help prevent the STHD RJ models from bowing out at the rim joist section.

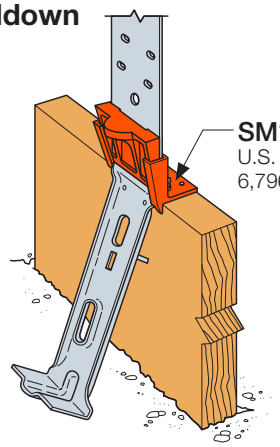




C-CF-2020 ©2020 SIMPSON STRONG-TIE COMPANY INC.

# Joist Framing Connectors

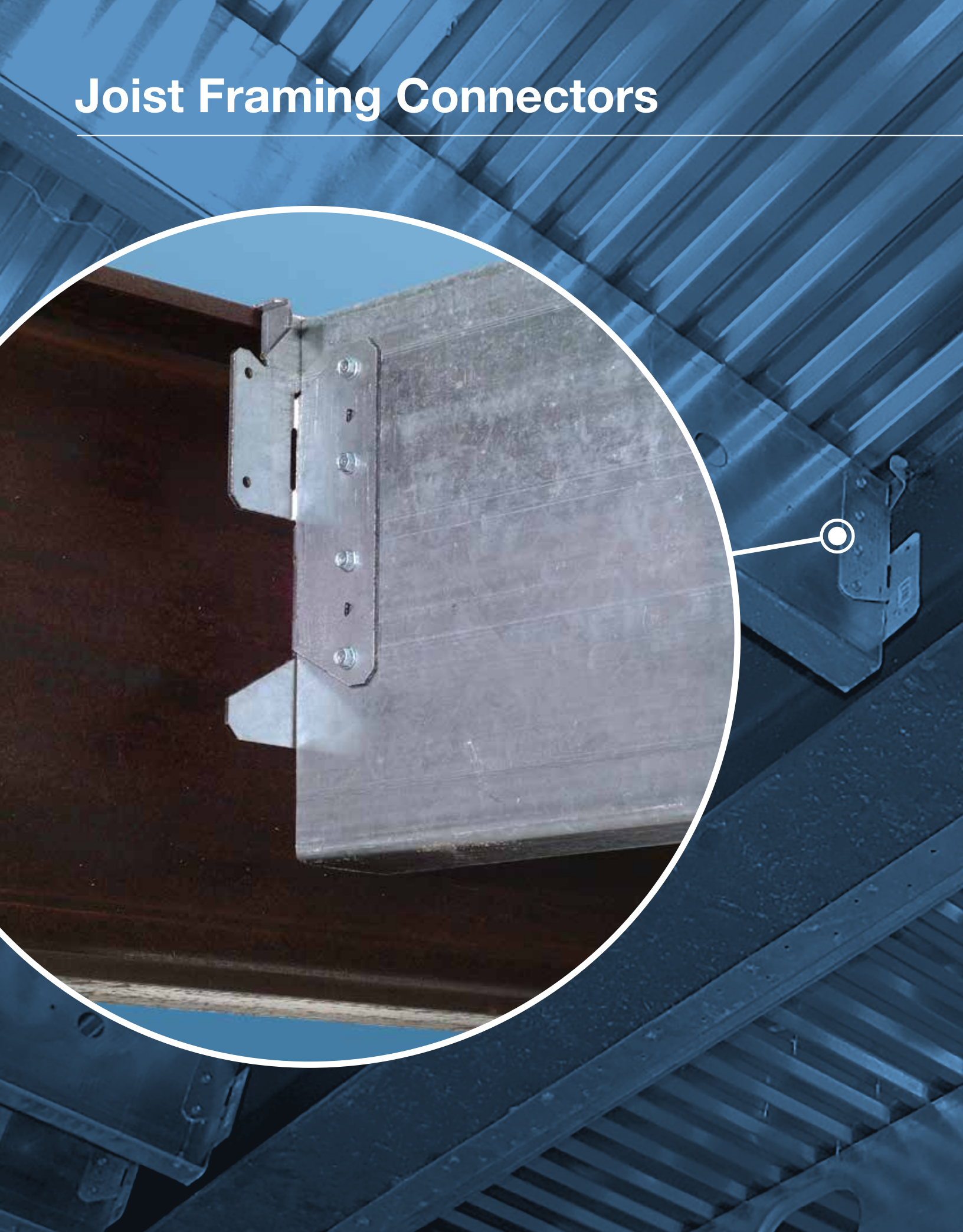

# **SJC** Steel-Joist Connectors

## SJC Connectors: Steel-to-Steel

| Model No. | Connector Material Thickness mil (ga.) | L (in.) | Framing Member Depth[5] (in.) | Fasteners[6] | | | Allowable $F_4$ Load (lb.)[3] | | | Code Ref. |
|---|---|---|---|---|---|---|---|---|---|---|
| | | | | Pattern[2] | Carried Member | Carrying Member | Minimum Member Thickness | | Maximum Connector Load[4] | |
| | | | | | | | 54 mil (16 ga.) | 68 mil (14 ga.) | | |
| SJC8.25 | 68 (14) | 8¼ | 10 | Min. | (4) #10 | (4) #10 | 980 | 980 | 2,930 | IBC |
| | | | | Max. | (9) #10 | (7) #10 | 1,005 | 1,490 | | |
| | | | | Inner | (5) #10 | (4) #10 | 1,345 | 2,005 | | |
| MSJC8.25 | 97 (12) | 8¼ | 10 | Min. | (4) #10 | (4) #10 | 1,005 | 1,710 | 2,930 | |
| | | | | Max. | (9) #10 | (7) #10 | 1,135 | 1,765 | | |
| | | | | Inner | (5) #10 | (4) #10 | 1,535 | 2,220 | | |
| SJC10.25 | 68 (14) | 10¼ | 12 | Min. | (6) #10 | (4) #10 | 1,170 | 1,625 | 3,935 | |
| | | | | Max. | (11) #10 | (7) #10 | 1,265 | 1,625 | | |
| | | | | Inner | (7) #10 | (5) #10 | 1,620 | 2,170 | | |
| MSJC10.25 | 97 (12) | 10¼ | 12 | Min. | (6) #10 | (4) #10 | 1,200 | 2,045 | 3,935 | |
| | | | | Max. | (11) #10 | (7) #10 | 1,265 | 2,045 | | |
| | | | | Inner | (7) #10 | (5) #10 | 1,730 | 2,635 | | |

1. See p. 85 for product information.
2. Min. fastener quantity and load values — fill all round holes; Max. fastener quantity and load values — fill all round and triangular holes; Inner fastener quantity and load values — see illustrations for fastener placement.
3. Allowable loads are based on bracing of the members located within 12" of the connection.
4. Maximum allowable load for connector that may not be exceeded when designing custom installations. Designer is responsible for member and fastener design.
5. For 6" and 8" joists, SSC connectors are recommended.
6. See *Fastening Systems* catalog (C-F-2019) on **strongtie.com** for more information on Simpson Strong-Tie fasteners.

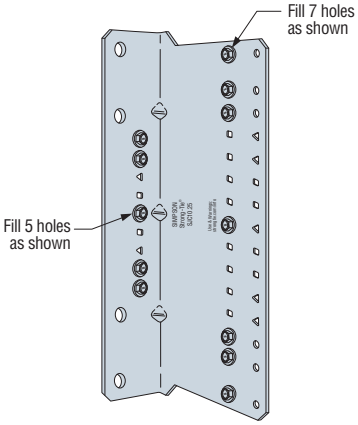


**SJC10.25 — Inner Fastener Pattern**
*(MSJC10.25 similar)*

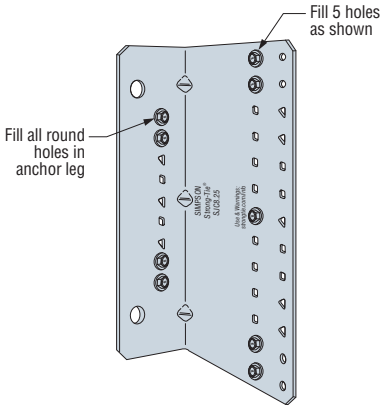


**SJC8.25 — Inner Fastener Pattern**
*(MSJC8.25 similar)*

For full dimensioned SJC clips, see p. 89.

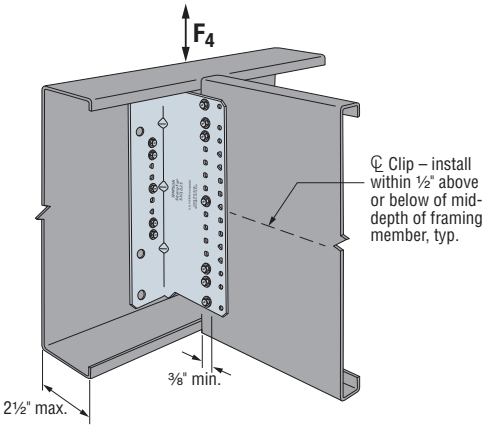


**SJC Installation with Carried Member Fasteners in Inner Row**

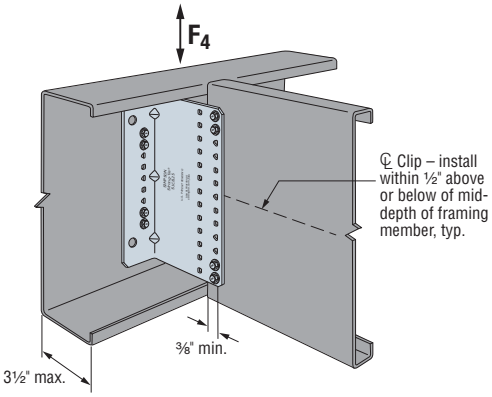


**SJC8.25 Installation with Min. Screw Pattern** *(screw in round holes)*
**For max. screw pattern, fill all round and triangle holes.**
**Min./Max. patterns have screws only in outer row.**



C-CF-2020 ©2020 SIMPSON STRONG-TIE COMPANY INC.

# S/JCT and S/HJCT Steel-Joist Connectors

SIMPSON Strong-Tie®

***This product is preferable to similar connectors because of a) easier installation, b) higher loads, c) lower installed cost, or a combination of these features.***

The S/JCT and S/HJCT are unique, skewable steel-joist framing connectors that combine strength, versatility and low installed cost. The connectors can be used with CFS headers, wood headers, steel I-beams (with welds or PAF fasteners) and masonry walls. Installed cost is minimized since these products are shear rather than bearing connectors, eliminating the need for web stiffeners. The connectors also feature horizontal tabs that facilitate top flange alignment and joist support during screw installation.

**Material:** S/JCT — 68 mil (14 ga.); S/HJCT — 97 mil (12 ga.)

**Finish:** Galvanized

**Features:**

- Uni-directional: Joist can be attached from left or right
- One size fits joists 8" through 14" deep
- Optional holes for additional load capacity
- Simplicity of design
- Quick and easy installation
- Field skewable up to 45° left or right

**Installation:**

- Attach hanger with specified fasteners. Use round holes for minimum load, use round and triangle holes for maximum load.
- May be used for weld-on applications. The minimum required weld to the top flange is ⅛" x 2½" fillet weld to each side of top flange. Consult the code for special considerations when welding galvanized steel.
- May be installed using PDPAT-62KP (0.157" x ⅝") powder-actuated fasteners. Steel headers with thicknesses between ¼" and ¾" having a minimum $F_y$ = 36 ksi. A Red (level 5) or Purple (level 6) powder load may be required to achieve specified penetration (p). See illustration on p. 179.

**Codes:** See p. 11 for Code Reference Key Chart

**Ordering Information:** The S/JCT is sold in cartons of 50. The S/HJCT is sold in kits as the S/HJCT-KT and contains five (5) connectors and (95) #14 screws.

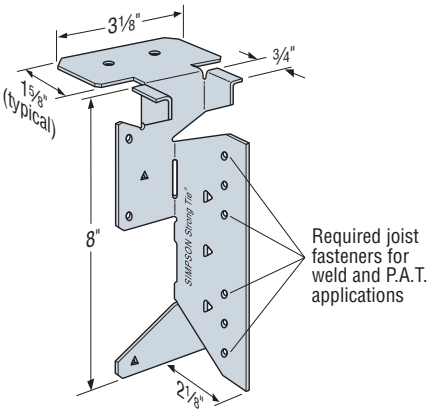


S/HJCT

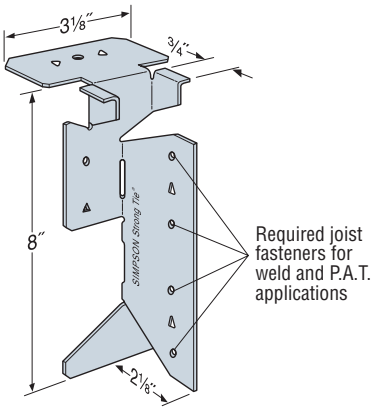


S/JCT

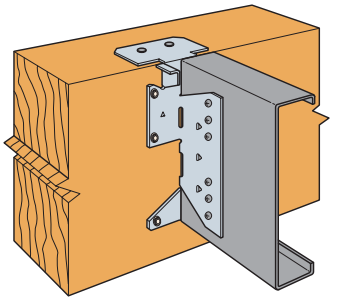

**S/HJCT Installation with a 4x10 Wood Header**

| Model No. | Fasteners[7] | | | Allowable Load[1] | | Code Ref. |
|---|---|---|---|---|---|---|
| | Top | Face | Joist | Uplift | Down | |
| **Attached to CFS Header: 54 mil (16 ga.)[3] — Straight Hanger** | | | | | | IBC, FL, LA |
| S/JCT (min.) | (1) #10 | (2) #10 | (4) #10 | 940 | 1,195 | |
| S/JCT (max.) | (1) #10 | (4) #10 | (6) #10 | 1,435 | 2,105 | |
| S/HJCT (min.) | (2) #10 | (4) #14 | (6) #14 | 1,510 | 2,920 | |
| S/HJCT (max.) | (2) #10 | (8) #14 | (9) #14 | 1,670 | 3,855 | |
| **Attached to CFS Header: 54 mil (16 ga.)[3] — Skewed Hanger** | | | | | | |
| S/JCT (min.) | (1) #10 | (2) #10 | (4) #10 | 940 | 1,135 | |
| S/JCT (max.) | (1) #10 | (4) #10 | (6) #10 | 940 | 1,185 | |
| S/HJCT (min.) | (2) #10 | (4) #14 | (6) #14 | 1,510 | 2,305 | |
| **Attached to Steel Header[4] — Straight and Skewed Hanger** | | | | | | |
| S/JCT (min.) | ⅛" x 2½" fillet weld to each side of top flange | | (4) #10 | 145 | 940 | |
| S/HJCT (min.) | | | (4) #14 | 195 | 1,450 | |
| S/HJCT (min.) Skew | | | (4) #14 | 195 | 1,235 | |
| S/JCT (min.) | (2) 0.157" x ⅝" powder-actuated fastener[8] | | (4) #10 | 145 | 750 | — |
| S/HJCT (min.) | | | (4) #14 | 195 | 1,185 | |
| **Attached to Masonry — Straight and Skewed Hanger** | | | | | | |
| S/HJCT (min.) | (2) ¼" x 2¼" Titen® 2 | (4) ¼" x 2¼" Titen 2 | (6) #14 | 710 | 1,785 | |
| S/HJCT (min.) Skew | | | | 710 | 1,410 | |

| Model No. | Fasteners[7] | | | Allowable Load[1,2] | | Code Ref. |
|---|---|---|---|---|---|---|
| | Top | Face | Joist | Uplift (160) | Down (100) | |
| **Attached to 4x DF/SP Wood Header — Straight Hanger** | | | | | | IBC, FL, LA |
| S/JCT (min.) | (1) 10d | (2) 10d | (4) #10 | 555 | 945 | |
| S/JCT (max.) | (1) 10d | (4) 10d | (6) #10 | 945 | 1,465 | |
| S/HJCT (min.) | (2) 10d | (4) ¼"x3" SDS | (6) #14 | 1,210 | 2,625 | |
| S/HJCT (max.) | (2) 10d | (8) ¼"x3" SDS | (9) #14 | 1,475 | 2,980 | |
| **Attached to 4x DF/SP Wood Header — Skewed Hanger** | | | | | | |
| S/JCT (min.) | (1) 10d | (2) 10d | (4) #10 | 390 | 845 | |
| S/JCT (max.) | (1) 10d | (4) 10d | (6) #10 | 775 | 1,300 | |
| S/HJCT (min.) | (2) 10d | (4) ¼" x 3" SDS | (6) #14 | 1,210 | 1,935 | |

1. Allowable loads are based on on a minimum of single 54 mil (16 ga.) CFS joist member. CFS joist shall be laterally braced per designer specification.
2. Allowable loads for wood header are based on 4x DF/SP minimum, for SPF/HF wood species use an adjustment factor of 0.72.
3. CFS header must be braced to prevent web buckling per designer specification and header must have full bearing of 1⅝" flange-depth.
4. Backing in the steel beam cavity is not required behind the hanger for load listed.
5. Screws shall be installed using joist hanger holes screwing through the hanger into the joist.
6. CFS joists with up to a 0.50" gap (short cut), use an adjustment factor of 0.87 and joists with a 0.50" to 0.90" gap (short cut), use an adjustment factor of 0.75.
7. See *Fastening Systems* catalog (C-F-2019) on **strongtie.com** for more information on Simpson Strong-Tie fasteners.
8. See p. 179 for more information.



C-CF-2020 ©2020 SIMPSON STRONG-TIE COMPANY INC.

# S/JCT and S/HJCT Steel-Joist Connectors

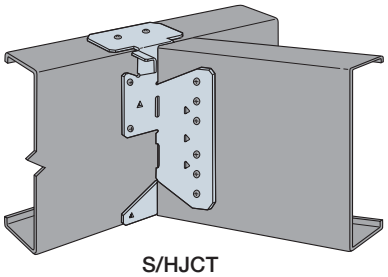

S/HJCT
Skewed 45° Installation

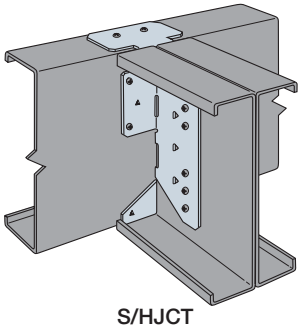

S/HJCT
Double-Joist Installation

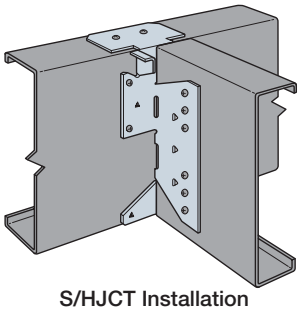

S/HJCT Installation
with a CFS Steel Header

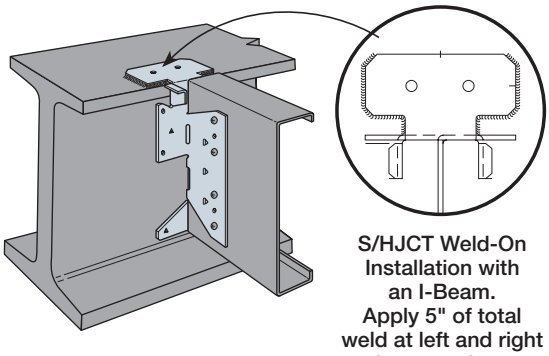

S/HJCT Weld-On
Installation with
an I-Beam.
Apply 5" of total
weld at left and right
edges, as shown.

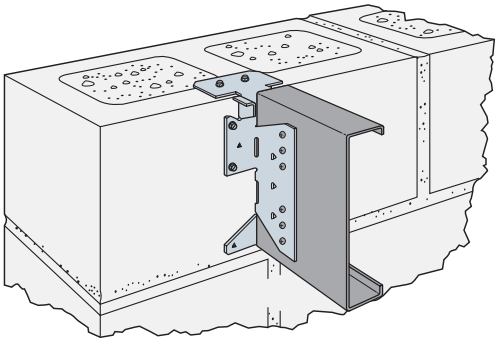

S/HJCT Installation
on Masonry Header

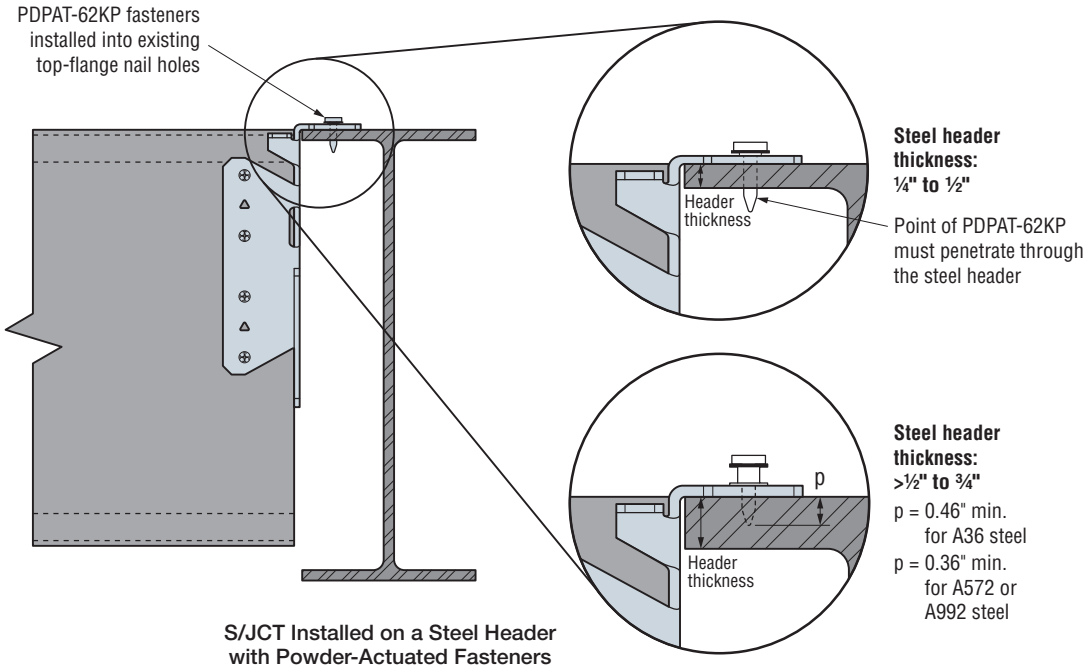


S/JCT Installed on a Steel Header
with Powder-Actuated Fasteners



C-CF-2020 ©2020 SIMPSON STRONG-TIE COMPANY INC.

# S/LBV and S/B Hangers

S/LBV and S/B top-flange hangers are manufactured with precision forming and quality control, providing dimensional accuracy and helping to ensure proper bearing area and connection. These hangers are designed for attaching to cold-formed steel members with screws or to structural steel with powder-actuated fasteners or welds.

**Material:** S/LBV — 68 mil (14 ga.); S/B — 97 mil (12 ga.)

**Finish:** Galvanized (G90)

**Installation:**

**Cold-Formed Steel:**

- S/LBV and S/B may be attached to cold-formed steel supporting members with screws to the face and top flanges and provide capacities for downward and uplift.

**Structural Steel:**

- S/LBV and S/B may be attached to structural steel support members with powder-actuated fasteners or welds. For powder-actuated fasteners use PDPAT-62KP (0.157" x ⅝") and provide full penetration as required. For welds use a minimum of ⅛" x 2" fillet weld on each top flange as required. Distribute the weld equally on both flanges. Capacities are provided for downward loads.

**Skew Options:**

- S/LBV and S/B may be skewed up to a maximum of 45°. Widths for skewable sections are limited to a maximum of 5.25" (specify right or left skew).

**Codes:** See p. 11 for Code Reference Key Chart

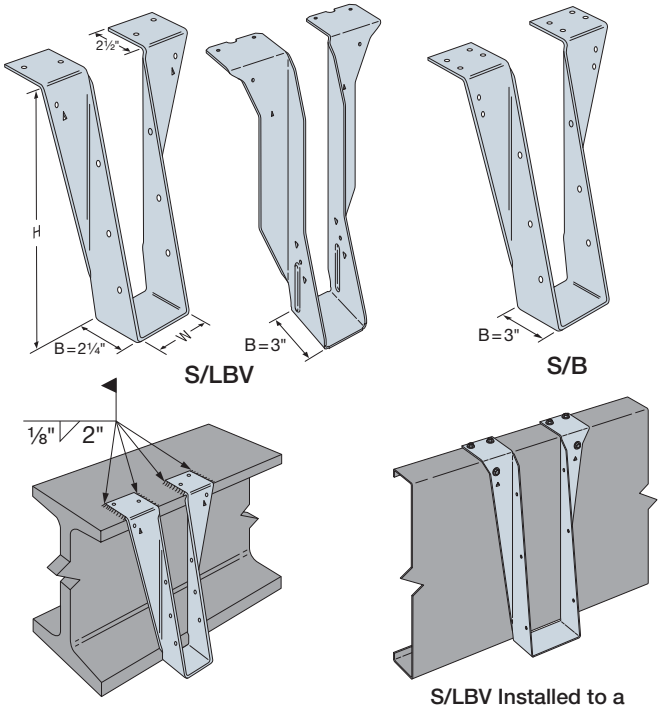


S/LBV

S/B

S/LBV Weld-On Applications
*(S/B similar)*

S/LBV Installed to a CFS Header with Screws
*(S/B similar)*

## Load Capacity S/ Hangers

| Model | Min. Base Header Material | Hanger Type | Fasteners | | | Allowable ASD Loads (lb.) | | Code Ref. |
|---|---|---|---|---|---|---|---|---|
| | | | Top | Face | Joist | Uplift | Down | |
| S/LBV | CFS | Straight | (4) #10 | (2) #10 | (3) #10 | 1,010 | 3,150 | IBC, LA, FL |
| | | Skewed | (4) #10 | (2) #10 | (3) #10 | 1,010 | 2,220 | |
| | A36 3⁄16" thk | Straight | (4) ⅛" x 2" weld | — | (3) #10 | — | 2,920 | |
| | | | (4) 0.157" x ⅝" PAF | — | (3) #10 | — | 2,685 | |
| S/B | CFS | Straight | (8) #10 | (4) #14 | (3) #14 | 1,855 | 5,970 | |
| | | Skewed | (8) #10 | (4) #14 | (3) #14 | 1,855 | 4,195 | |
| | A36 3⁄16" thk | Straight | (4) ⅛" x 2" weld | — | (3) #14 | — | 5,755 | |
| | | | (8) 0.157" x ⅝" PAF | — | (3) #14 | — | 3,695 | |

1. Designer shall ensure that the joist member adequately transfers load to hanger. Header must be braced to prevent buckling per designer specification.
2. Load is based on the Simpson Strong-Tie® PDPAT-62KP (0.157" x ⅝") powder-actuated fasteners. Steel headers with thicknesses between ¼" and ¾" having minimum $F_y$ = 36 ksi. A Red (level 5) or Purple (level 6) powder load may be required to achieve specified penetration.
3. Tabulated loads are based on testing with full bearing of 2½" flange-depth minimum with 68 mil (14 ga.) CFS for S/LBV and 97 mil (12 ga.) CFS for S/B hanger.
4. S/LBV2.12 and S/LBV4.18 bearing depth dimension, B, are 3", others S/LBV hanger sizes are 2¼".
5. See *Fastening Systems* catalog (C-F-2019) on **strongtie.com** for more information on Simpson Strong-Tie fasteners.

## Standard Hanger Sizes

| S/LBV Model | S/B Model | W (in.) | H (in.) |
|---|---|---|---|
| S/LBV1.68/8 | S/B1.68/8 | 1 11⁄16 | 8 |
| S/LBV1.68/10 | S/B1.68/10 | | 10 |
| S/LBV1.68/12 | S/B1.68/12 | | 12 |
| S/LBV1.68/14 | S/B1.68/14 | | 14 |
| S/LBV2.12/8 | S/B2.12/8 | 2⅛ | 8 |
| S/LBV2.12/10 | S/B2.12/10 | | 10 |
| S/LBV2.12/12 | S/B2.12/12 | | 12 |
| S/LBV2.12/14 | S/B2.12/14 | | 14 |
| S/LBV2.56/8 | S/B2.56/8 | 2 9⁄16 | 8 |
| S/LBV2.56/10 | S/B2.56/10 | | 10 |
| S/LBV2.56/12 | S/B2.56/12 | | 12 |
| S/LBV3.12/8 | S/B3.12/8 | 3⅛ | 8 |
| S/LBV3.12/10 | S/B3.12/10 | | 10 |
| S/LBV3.12/12 | S/B3.12/12 | | 12 |
| S/LBV4.18/8 | S/B4.18/8 | 4 3⁄16 | 8 |
| S/LBV4.18/10 | S/B4.18/10 | | 10 |
| S/LBV4.18/12 | S/B4.18/12 | | 12 |
| S/LBV4.18/14 | S/B4.18/14 | | 14 |

**Standard size ordering:**
Joist 800S162-54 using an S/LBV hanger.

**S/LBV1.68/8**

Product Name — Width (in.) — Height (in.)

## Hanger Modification Options: Custom Height and Skewable

| S/LBV Model | S/B Model | W (in.) | H (in.) |
|---|---|---|---|
| S/LBV1.56X | — | — | S/LBV 6 to 20<br>S/B 6 to 30 |
| S/LBV1.68X | S/B1.68X | 1 11⁄16 | |
| S/LBV1.81X | S/B1.81X | 1 13⁄16 | |
| S/LBV2.12X | S/B2.12X | 2⅛ | |
| S/LBV2.56X | S/B2.56X | 2 9⁄16 | |
| S/LBV2.68X | S/B2.68X | 2 11⁄16 | |
| S/LBV3.12X | S/B3.12X | 3⅛ | |
| S/LBV3.56X | S/B3.56X | 3 9⁄16 | |
| S/LBV3.62X | S/B3.62X | 3⅝ | |
| S/LBV4.18X | S/B4.18X | 4 3⁄16 | |
| — | S/B5.25X | 5¼ | |
| — | S/B6.25X | 6¼ | |
| — | S/B7.25X | 7¼ | |

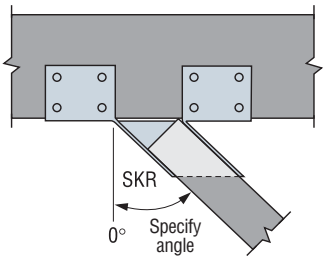


Top View S/B Hanger Skewed Right
*(S/LBV similar)*

**Custom ordering example:**
Joist 800S162-54 using S/LBV hanger skewed right 20°.

**S/LBV1.68X H1=8 SKR20**

Product Name — Width (in.) — X = Modification — Height (in.) — Skewed Right 20° (SKL = Skewed Left)



C-CF-2020 ©2020 SIMPSON STRONG-TIE COMPANY INC.

# **S/DHUTF** Drywall Hangers

The S/DHUTF top-mount hanger is designed to carry joist loads to a CFS stud wall through two layers of ⅝" gypsum board (drywall). This hanger installs after the drywall is in place and comes in sizes that accommodate most typical joists used in multi-family and commercial construction.

**Material:** 97 mil (12 ga.)

**Finish:** Galvanized (G90)

**Installation:**

- Use all specified fasteners; see General Notes
- Hanger to be framed in-line with vertical wall stud
- Drywall is installed first
- Wall top track must be restrained to counteract load eccentricity from hanger

**Codes:** See p. 11 for Code Reference Key Chart

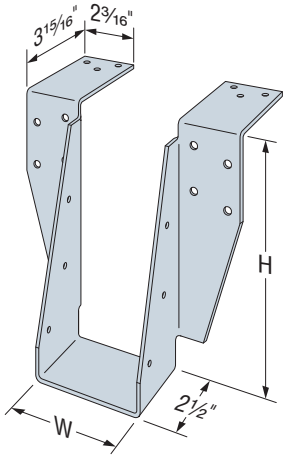


**S/DHUTF**
US Patent 9,394,680

| Model No. | Dimensions (in.) | |
|---|---|---|
| | W | H |
| S/DHU1.68/8TF | 1 11/16 | 8 |
| S/DHU1.68/10TF | | 10 |
| S/DHU1.68/12TF | | 12 |
| S/DHU2.1/8TF | 2⅛ | 8 |
| S/DHU2.1/10TF | | 10 |
| S/DHU2.1/12TF | | 12 |
| S/DHU2.56/8TF | 2 9/16 | 8 |
| S/DHU2.56/10TF | | 10 |
| S/DHU2.56/12TF | | 12 |

| Model | Fasteners[6] | | | Allowable Load (lb.) | | Code Ref. |
|---|---|---|---|---|---|---|
| | Top | Face | Joist | Uplift | Down | |
| S/DHUTF | (6) #10 | (8) #14 x 2" | (3) #10 | 1,230 | 1,700 | — |

1. Designer shall ensure that the joist member adequately transfers load to the hanger.
2. Tabulated loads assume (2x) ⅝" Type X drywall attached per IBC.
3. Wall studs designed per designer specifications. At a minimum, the assembly must consist of 600T350-68, Gr. 50 ksi top track and 600S162-43, Gr. 33 ksi wall studs spaced at a maximum of 24" o.c.
4. Tabulated loads are based on testing with full bearing of 3 15/16" hanger top flange. The minimum joist gauge is 54 mil (16 ga.).
5. S/DHUTF hanger can be installed ¾" max. from the center of the vertical stud per the in-line framing specifications of the AISI General Provisions without load adjustment.
6. See *Fastening Systems* catalog (C-F-2019) on **strongtie.com** for more information on Simpson Strong-Tie fasteners.

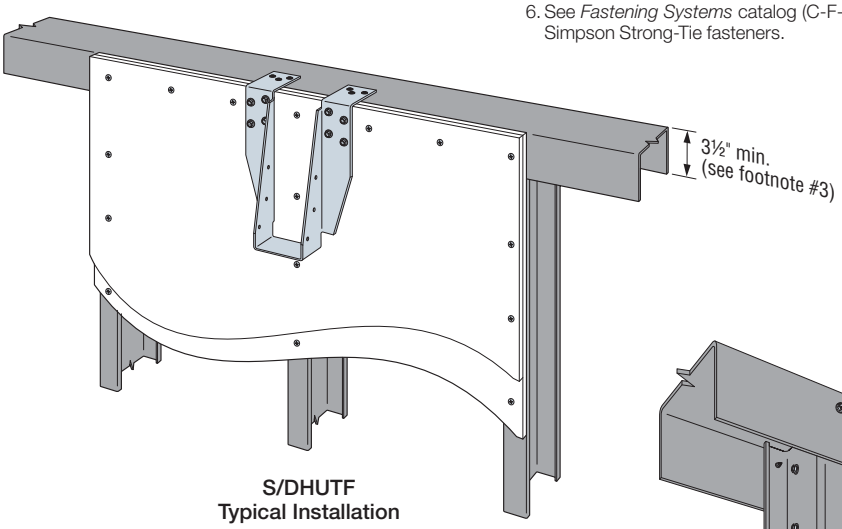


**S/DHUTF**
**Typical Installation**

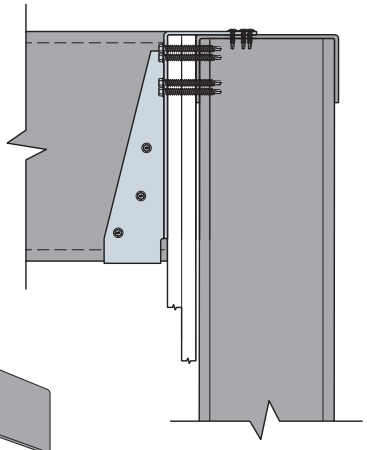

**Typical Installation Over (2) Layers of ⅝" Drywall**

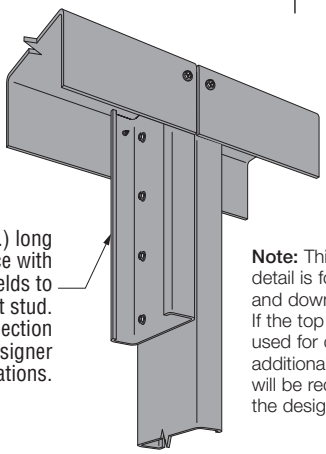

12" (min.) long stud piece with screws or welds to full height stud. Stud and connection per designer specifications.

**Note:** This splice detail is for uplift and download only. If the top track is used for drag, additional detailing will be required by the designer.

**Typical Top Track Splice**

C-CF-2020 ©2020 SIMPSON STRONG-TIE COMPANY INC.

# **WP** Hanger

This series of purlin hangers offer the greatest design flexibility and versatility.

**Material:** Stirrup — 97 mil (12 ga.)

**Finish:** Simpson Strong-Tie® gray paint. Some models available hot-dip galvanized; specify HDG; see Corrosion Information on pp. 17–19.

**Installation:** WP hanger may be welded to steel header with 3⁄16" x 1½"-fillet welds located at each end of top flange

**Options:** W and H dimensions are modifiable

**Sloped and/or Skewed Seat:**

- WP series may be skewed to a maximum of 84° and/or sloped to a maximum of 45°.
- For slope only, skew only, or slope and skew combinations, the allowable load is 100% of the table load.
- Specify the slope up or down in degrees from the horizontal plane and/or the skew right or left in degrees from the perpendicular vertical plane. Specify whether low side, high side or center of joist will be flush with the top of the header.

**Codes:** See p. 11 for Code Reference Key Chart

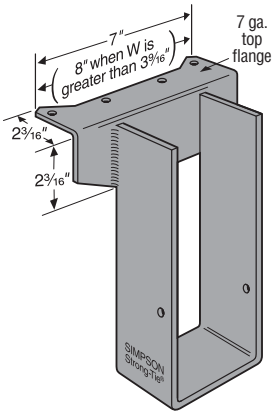


WP

*Some model configurations may differ from those shown. Call Simpson Strong-Tie for details.*

| Model No. | Dimensions (in.) | | | Fasteners[4] | | Allowable Down Load (lb.) | Code Ref. |
|---|---|---|---|---|---|---|---|
| | W | H | B | Header | Joist | | |
| WP | 1 9⁄16 – 7½ | 4 – 30 | 2½ – 5 | Weld | (1) #10 | 3,650 | — |

1. For hanger heights exceeding the joist height, the allowable load is 0.50 of the table value.
2. The designer shall ensure that the joist member adequately transfers load to the hanger.
3. Not all combinations of W, H, and B dimensions are available. Contact Simpson Strong-Tie.
4. See *Fastening Systems* catalog (C-F-2019) on **strongtie.com** for more information on Simpson Strong-Tie fasteners.

# **HUC** Hangers

**Material:** 68 mil (14 ga.)

**Finish:** Galvanized

**Installation:**

- HUC series hangers may be welded to supporting structural steel members
- Use 1" weld segments equally spaced top and bottom, with half the segments on each side of hanger
- Welds may be either lap joint (on outside edge of flanges) or flare-bevel groove (on flange bend line)

**Codes:** See p. 11 for Code Reference Key Chart

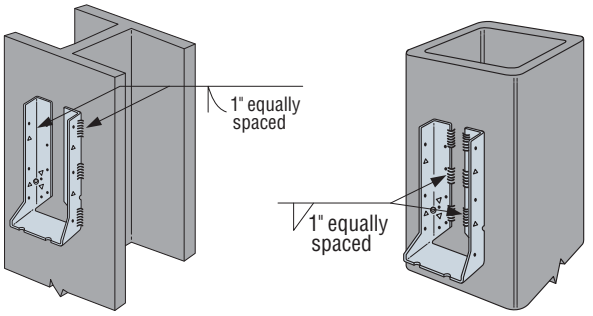


**Flare-Bevel Groove Weld** *(see detail)*

**Lap-Joint Fillet Weld**

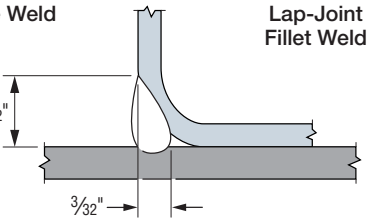


**Flare-Bevel Groove Weld Detail**

| Model Series | Connection Type | | Maximum Allowable Down Load (lb.) | Code Ref. |
|---|---|---|---|---|
| | Joist | Structural Steel | | |
| | Fastener[5,6] | Weld | | |
| HUC | #10 | (4) 1" segments | 3,280 | — |
| | #10 | (6) 1" segments | 4,855 | |

1. Loads assume E-70S-6 (60 ksi) filler rod.
2. Welds must conform to the current A.W.S. D1.3 structural welding code for sheet steel and must be performed by a certified welder.
3. Designer shall ensure that the joist member adequately transfers load to hanger.
4. Hanger-to-joist connection shall be made using screws on the side of the hanger where it meets the web of the joist.
5. See *Fastening Systems* catalog (C-F-2019) on **strongtie.com** for more information on Simpson Strong-Tie fasteners.
6. The number of screws is per designer specifications.

**Installation for CFS Built-Up Beam**

The designer is responsible for design of beam member.

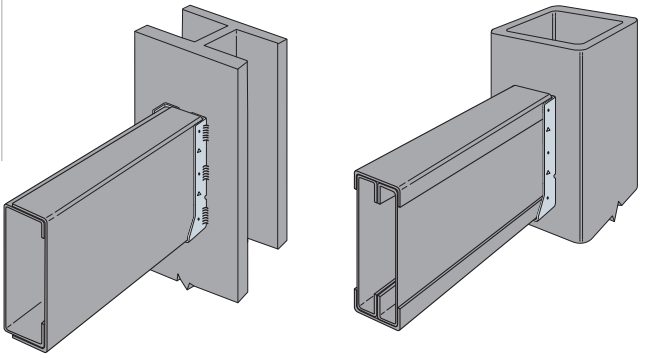



C-CF-2020 ©2020 SIMPSON STRONG-TIE COMPANY INC.

# **L, LS and S/LS** Utility Clips and Skewable Angles

L, LS, and S/LS angles are load rated, providing the correct thickness and number of fasteners for the specifier compared with field fabricated clip angles. These angles also have well-defined fastener locations, and testing ensures that the tabulated load values account for connection eccentricities. The connectors are general utility reinforcing angles with multiple uses. S/LS and LS connectors are skewable and can be used to attach members intersecting at angles.

**Material:** L — 54 mil (16 ga.); S/LS and LS — 43 mil (18 ga.)

**Finish:** Galvanized (G90)

**Installation:**

- Use all specified fasteners
- S/LS and LS — Field-skewable; bend one time only
- CFS framing must be constrained against rotation when using a single S/LS or LS per connection

**Codes:** See p. 11 for Code Reference Key Chart

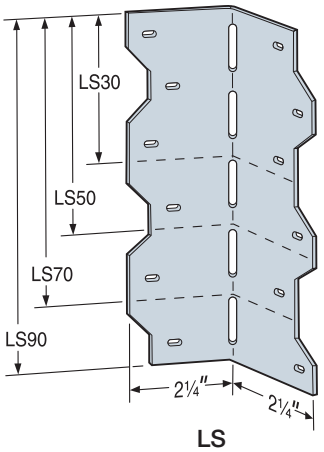


**LS**

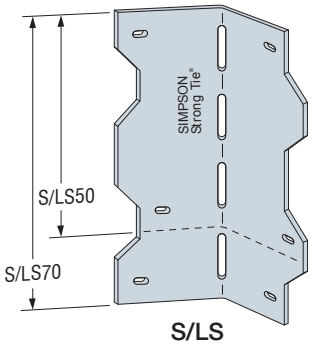


**S/LS**
US Patent 4,230,416

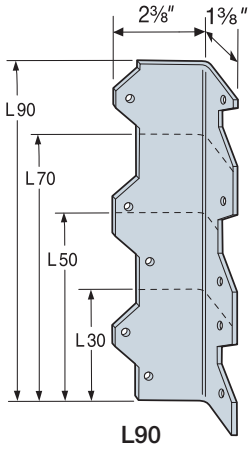


**L90**

| Model No. | Length (in.) | Fasteners[2] | Allowable Load (lb.) | | | | | | Code Ref. |
|---|---|---|---|---|---|---|---|---|---|
| | | | 33 mil (20 ga.) | | 43 mil (18 ga.) | | 54 mil (16 ga.) | | |
| | | | $F_1$ | $F_2$ | $F_1$ | $F_2$ | $F_1$ | $F_2$ | |
| L30 | 3 | (4) #10 | 200 | 60 | 315 | 85 | 610 | — | — |
| L50 | 5 | (6) #10 | 475 | — | 675 | 90 | 750 | 110 | |
| L70 | 7 | (8) #10 | 705 | — | 760 | 110 | 1,100 | 110 | |
| L90 | 9 | (10) #10 | 795 | — | 945 | 110 | 1,740 | 110 | |
| LS30 | 3⅜ | (6) #10 | 200 | — | 370 | — | 500 | — | |
| S/LS50 | 4⅞ | (4) #10 | 200 | — | 370 | — | 500 | — | |
| S/LS70 | 6⅜ | (6) #10 | 465 | — | 575 | — | 715 | — | |
| LS90 | 7⅞ | (12) #10 | 465 | — | 895 | — | 915 | — | |

These products are available with additional corrosion protection. Additional products on this page may also be available with this option. Check with Simpson Strong-Tie for details.

1. Loads are for one part only.
2. See *Fastening Systems* catalog (C-F-2019) on **strongtie.com** for more information on Simpson Strong-Tie fasteners.

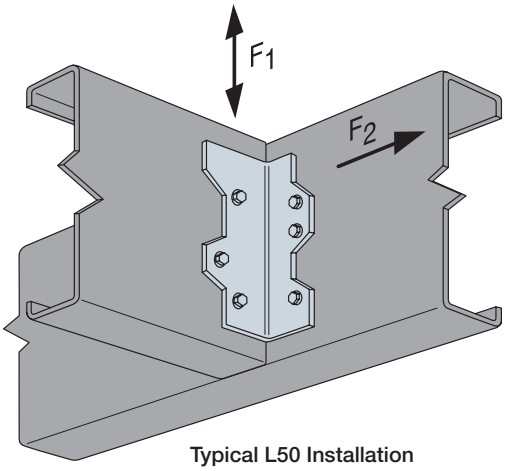


**Typical L50 Installation**

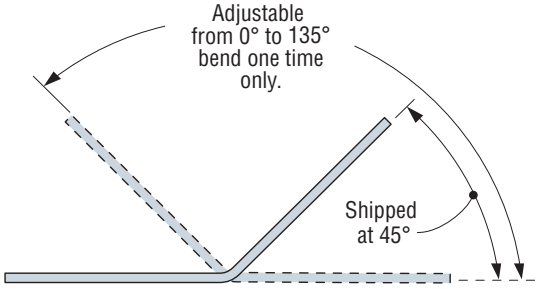


**S/LS Top View**

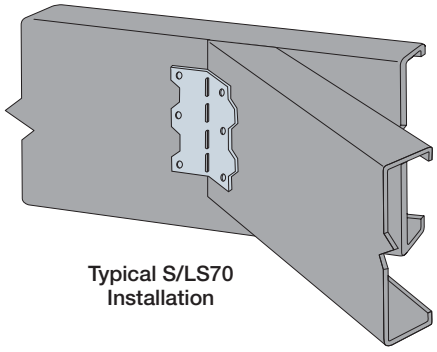

**Typical S/LS70 Installation**

C-CF-2020 ©2020 SIMPSON STRONG-TIE COMPANY INC.

# **ICFVL** Ledger Connector System

The ICFVL ledger connector system is engineered to solve the challenges of mounting CFS ledgers to insulated concrete form (ICF) walls. The ICFVL is designed to provide both vertical and lateral, in-plane performance. There are many benefits over traditional anchor bolting, including better on-center spacing in most cases, faster installation and no protrusions. The embedded legs of the ICFVL are embossed for additional stiffness and the hole allows for concrete to flow through and around the connector. The exposed flange on the face of the ICF provides a structural surface for mounting a CFS ledger.

**Material:** ICFVL — 68 mil (14 ga.)

**Finish:** Galvanized (G90)

**Installation:**

**ICFVL in ICF**

- Snap a chalk line for the bottom of the ledger
- Mark required on-center spacing
- Use ICFVL to mark kerfs locations
- Cut kerfs as marked
- Insert ICFVL flush to the face of the ICF
- Pour concrete

**CFS Ledger Attachment**

- Position the ledger level to the chalk line and against the ICFVL
- Attach with four #14 x ¾", #3 drill point screws (not provided)
- All screws should be located at least ½" from the edge of the ICFVL
- Space screws evenly

**Codes:** See p. 11 for Code Reference Key Chart

**Warning:**
Industry studies show that hardened fasteners can experience performance problems in wet environments. Accordingly, use this product in dry environments only.

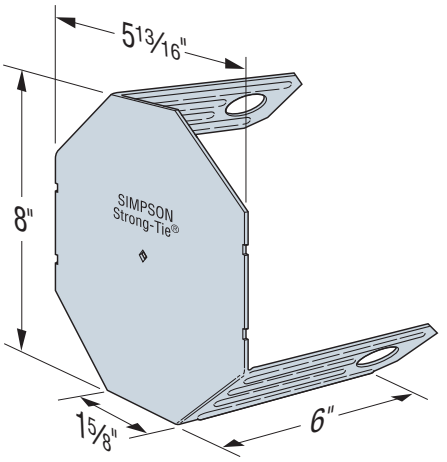


**ICFVL**
Patent pending

Reduce the chance of misinstallations using the wrong size screws; specify Simpson Strong-Tie® #14 Self-Drilling E Metal screw (Model No. E1B1414) with the ICFVL Ledger Connector System. Visit **strongtie.com** for details.

Available in 100 ct. and 2,500 ct. cartons.

| Model No. | Fasteners | Allowable ASD Load (lb.) 54 mil (16 ga.) 68 mil (14 ga.) | | Code Ref. |
|---|---|---|---|---|
| | | Download | Lateral $F_1$ | |
| ICFVL | (4) #14 x ¾"[3] | 1,660 | 1,525 | — |

1. Fasteners for CFS ledger are not provided.
2. Loads apply to ICF foam thicknesses of 2¾" or less. Contact Simpson Strong-Tie for allowable loads on thicker walls.
3. Alternately, ¼" x ¾" fasteners may be used.
4. Concrete $f'_c$ = 2,500 psi minimum.
5. When combining download and lateral loads, the designer shall use the following interaction equation: Design Download/Allowable Download + Design Lateral Load/ Allowable Lateral Load ≤ 1.

## These tables address vertical load applications only

| Ledger Material Thickness mil (ga.) | Connector Type | ICFVL Spacing to Replace Anchor Bolts on a CFS Ledger (in.)[1,2] | | | | | | | |
|---|---|---|---|---|---|---|---|---|---|
| | | ½"-Diameter Anchors at | | | | ⅝"-Diameter Anchors at | | | |
| | | 12" o.c. | 24" o.c. | 36" o.c. | 48" o.c. | 12" o.c. | 24" o.c. | 36" o.c. | 48" o.c. |
| 68 (14) | ICFVL | 11 | 22 | 33 | 44 | 9 | 18 | 27 | 36 |
| 54 (16) | ICFVL | 15 | 30 | 45 | 48 | 12 | 24 | 36 | 48 |

1. The designer may specify different spacing based on the load requirements.
2. See flier F-ICFVL on **strongtie.com** for additional connection details.

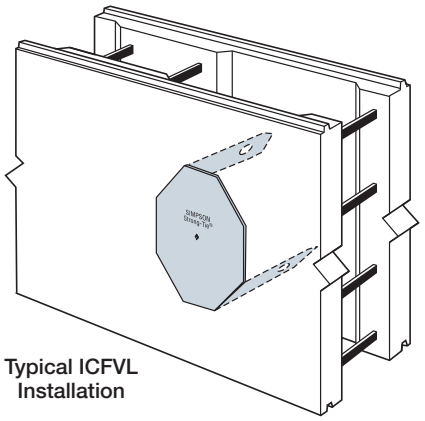

**Typical ICFVL Installation**

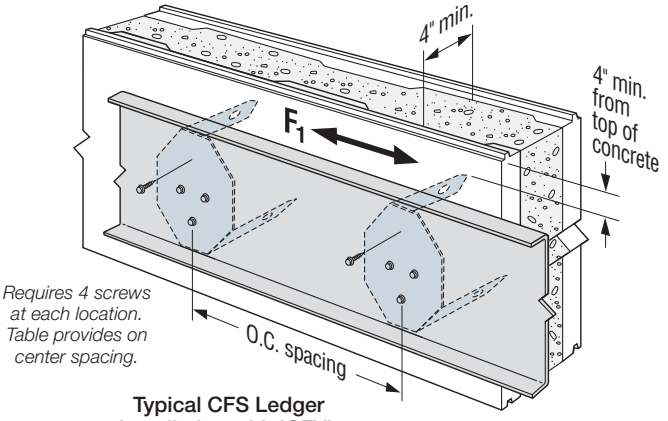


**Typical CFS Ledger Installation with ICFVL**
*(minimum 54 mil)*



C-CF-2020 ©2020 SIMPSON STRONG-TIE COMPANY INC.

# **TB and LTB** Bridging

TB and LTB bridging connectors are a cost-effective solution for bracing between floor joists when compared with field fabricated blocking and clip angles.

**Material:** LTB — 27 mil (22 ga.); TB — 33 mil (20 ga.)

**Finish:** Galvanized (G90)

**Installation:**

- Use (2) #10 screws at each end

**Codes:** See p. 11 for Code Reference Key Chart

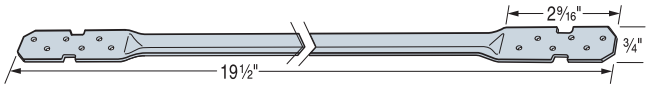


LTB20

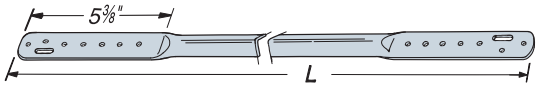


TB

| Web Height (in.) | Spacing (in.) | TB | | LTB Model No. | Code Ref. |
|---|---|---|---|---|---|
| | | Model No. | L (in.) | | |
| 6 | 12 | TB20 | 20 | LTB20 | — |
| 8 | | TB20 | 20 | LTB20 | |
| 10 | | TB20 | 20 | — | |
| 12 | | TB27 | 27 | — | |
| 14 | | TB27 | 27 | — | |
| 6 | 16 | TB27 | 27 | — | |
| 8 | | TB27 | 27 | — | |
| 10 | | TB27 | 27 | — | |
| 12 | | TB27 | 27 | — | |
| 14 | | TB27 | 27 | — | |
| 10 | 24 | TB36 | 36 | — | |
| 12 | | TB36 | 36 | — | |
| 14 | | TB36 | 36 | — | |

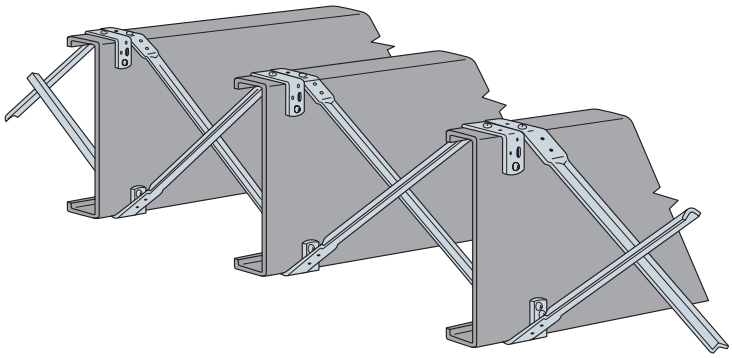

Typical TB Installation

# **CS** Coiled Strap

CS coiled utility straps are an ideal solution when it is desired to brace floor joist flanges with flat strap. These products are packaged in lightweight cartons (about 40 lb.) and can be cut to length on the jobsite.

**Material:** See table

**Finish:** Galvanized (G90)

**Installation:**

- Use all specified fasteners
- Refer to the applicable code for minimum edge and end distance

**Codes:** See p. 11 for Code Reference Key Chart

| Model No. | Total Length (ft.) | Connector Material Thickness mil (ga.) | Width (in.) | Fasteners[4] (At Blocking) | | | Allowable Tension Load (lb.) | Code Ref. |
|---|---|---|---|---|---|---|---|---|
| | | | | Framing Thickness mil (ga.) | | | | |
| | | | | 33 (20 ga.) | 43 (18 ga.) | 54 (16 ga.) | | |
| CS16 | 150 | 54 (16) | 1¼ | (9) #10 | (6) #10 | (4) #10 | 1,550 | IBC, FL, LA |
| CS20 | 250 | 33 (20) | 1¼ | (6) #10 | (4) #10 | (3) #10 | 945 | |

1. In order to achieve the tabulated loads in the strap, attach each strap to the blocking with the tabulated number of screws.
2. Strap length at blocking to achieve tabulated load = number of tabulated screws + 1".
3. Calculate the strap value for a reduced number of screws to the blocking as follows:

$$\text{Allowable Load} = \frac{\text{No. of Screws Used}}{\text{No. of Screws in Table}} \times \text{Table Load}$$

4. See *Fastening Systems* catalog (C-F-2019) on **strongtie.com** for more information on Simpson Strong-Tie fasteners.

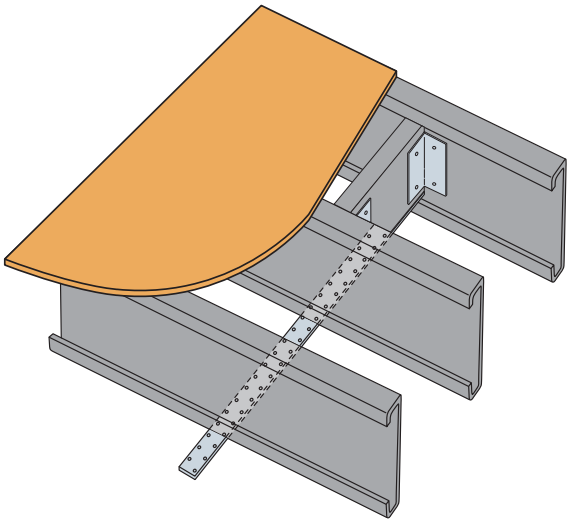

Typical CS Installation for Block and Strap Joist Bridging



C-CF-2020 ©2020 SIMPSON STRONG-TIE COMPANY INC.

# Roof, Truss and Rafter Connectors, Ties and Straps

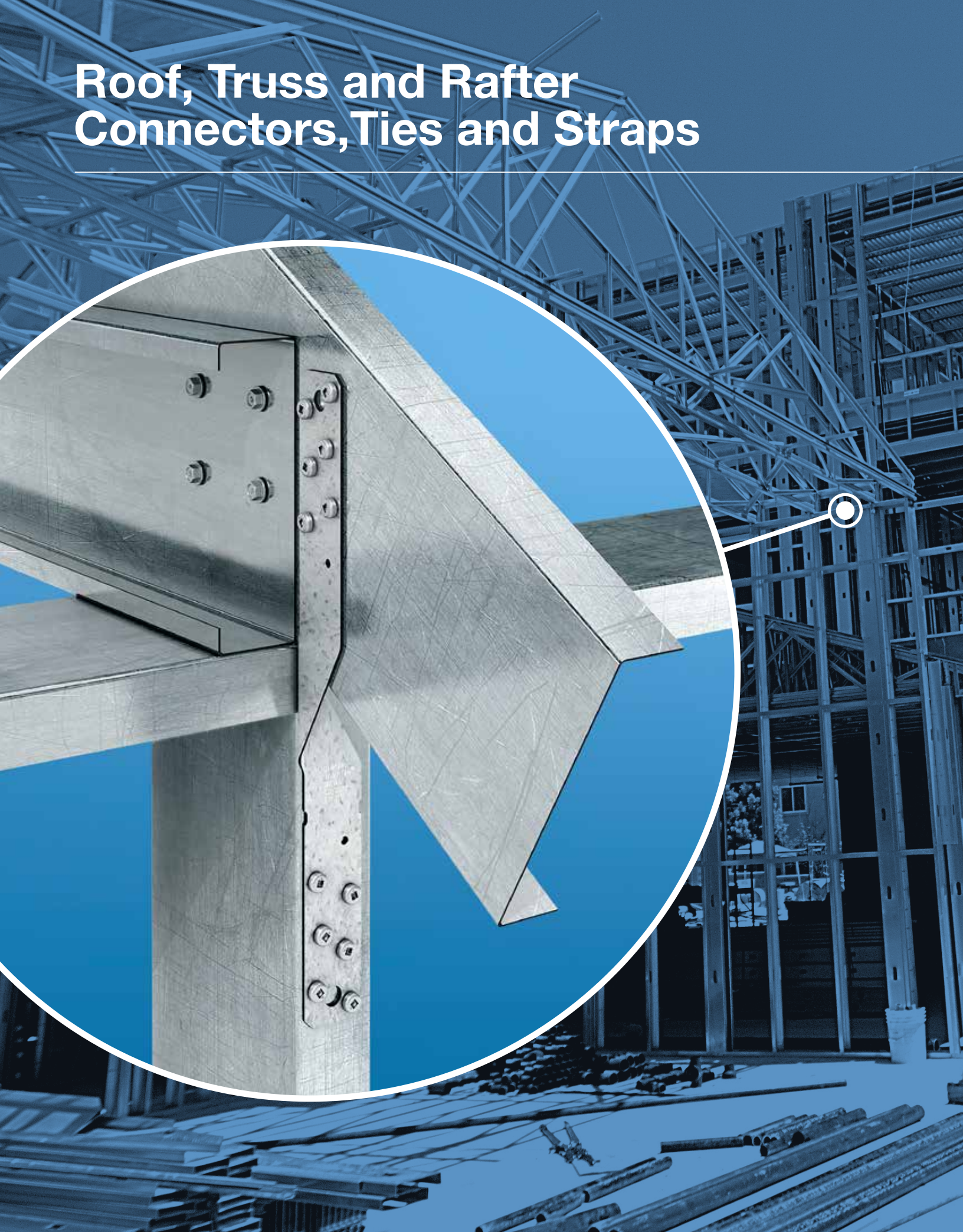

# **SSP/DSP/TSP** Stud Plate Ties

The SSP and DSP single- and double-stud plate ties connect single and double studs to top and bottom track. Each can be used for either top- or bottom-track applications.

**Material:** SSP/DSP — 43 mil (18 ga.); TSP — 54 mil (16 ga.)

**Finish:** Galvanized (G90). Some products available in ZMAX®; see Corrosion Information, pp. 17–19.

**Installation:** • Use all specified fasteners; see General Notes

• DSP/SSP — top track installation-fill all round and triangle holes

**Codes:** See p. 11 for Code Reference Key Chart

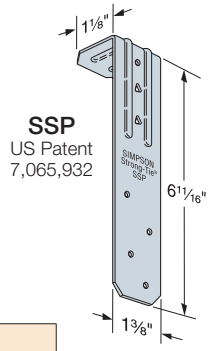


**SSP**
US Patent
7,065,932

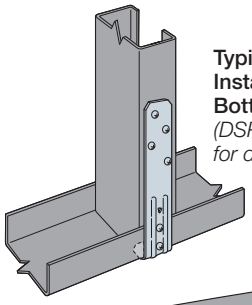

**Typical SSP Installed to Bottom Track**
*(DSP similar for double stud)*

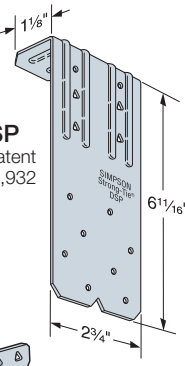


**DSP**
US Patent
7,065,932

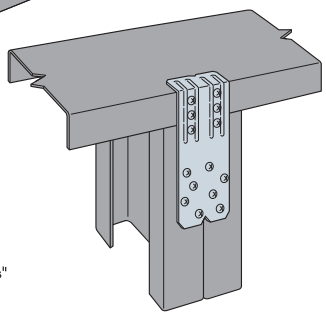

**Typical DSP Installed to Top Track**
*(SSP similar for single stud)*

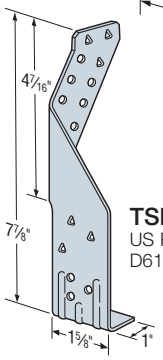


**TSP**
US Patent
D618,085

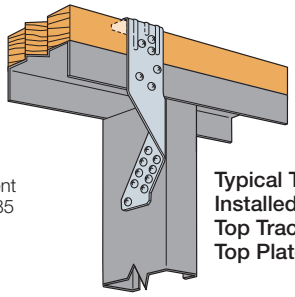

**Typical TSP Installed to Top Track with Top Plate**

| Model No. | Fasteners[4] | | | | Allowable Uplift Load (lb.) | | Code Ref. |
|---|---|---|---|---|---|---|---|
| | Studs | Top Track | | Bottom Track | 33 mil (20 ga.) | 43 mil (18 ga.) | |
| | CFS | Wood | CFS | CFS | | | |
| SSP | (4) #10 | — | — | (2) #10 | 355 | 625 | IBC, FL, LA |
| | | — | (2) #10 | — | 340 | 600 | |
| | | (2) #10[3] | (1) #10 | — | 405[1] | 715[1] | |
| | | (2) 10d | (1) #10 | — | 480[1] | 840[1] | |
| DSP | (8) #10 | — | — | (4) #10 | 430 | 695 | |
| | | — | (4) #10 | — | 475 | 775 | |
| | | (4) #10[3] | (2) #10 | — | 585[1] | 955[1] | |
| | | (4) 10d | (2) #10 | — | 730[1] | 1,200[1] | |
| TSP | (6) #10 | — | — | (3) #10 | 345 | 645 | |
| | | — | (3) #10 | — | 370 | 700 | |
| | (9) #10 | (3) #10[3] | (3) #10 | — | 360[1] | 685[1] | |
| | | (3) 10d | (3) #10 | — | 480[1] | 905[1] | |

These products are available with additional corrosion protection. Additional products on this page may also be available with this option. Check with Simpson Strong-Tie for details.

1. For wood plates, noted values only apply to DF/SP members where wood top plates are used. For SPF values, multiply by 0.86.
2. For wood plates, when cross-grain tension cannot be avoided, mechanical reinforcement to resist such forces should be considered.
3. Screws installed into wood plates with a minimum #10 x ¾" self-drilling screw.
4. See *Fastening Systems* catalog (C-F-2019) on **strongtie.com** for more information on Simpson Strong-Tie fasteners.

# **SP** Stud Plate Ties

The SP stud plate tie is a plate-to-stud connection providing uplift resistance.

**Material:** See table.

**Finish:** Galvanized. Available with ZMAX® coating; see Corrosion Information, pp. 17–19.

**Installation:** • Use all specified fasteners

**Codes:** See p. 11 for Code Reference Key Chart

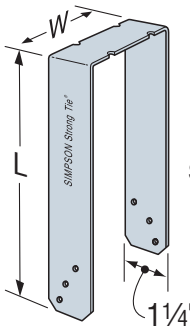


**SP4**

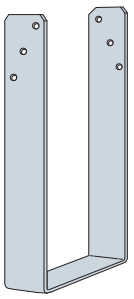

**SPH6**

| Model No. | Connector Material Thickness mil (ga.) | Dimensions (in.) | | Stud Fasteners[1] | Allowable Uplift Load 33 mil (20 ga.) (lb.) | Code Ref. |
|---|---|---|---|---|---|---|
| | | W | L | | | |
| SP4 | 33 (20) | 3⁹⁄₁₆ | 7¼ | (6) #10 | 825 | IBC, FL, LA |
| SP6 | 33 (20) | 5⁹⁄₁₆ | 7¾ | (6) #10 | 825 | |
| SP8 | 43 (18) | 7⁵⁄₁₆ | 8⁵⁄₁₆ | (6) #10 | 930 | — |
| SPH4 | 43 (18) | 3⁹⁄₁₆ | 8¾ | (12) #10 | 1,490 | |
| SPH4R | 43 (18) | 4¹⁄₁₆ | 8¼ | (12) #10 | 1,490 | |
| SPH6 | 43 (18) | 5⁹⁄₁₆ | 9¼ | (12) #10 | 1,490 | |
| SPH6R | 43 (18) | 6¹⁄₁₆ | 8¾ | (12) #10 | 1,490 | |
| SPH8 | 43 (18) | 7⁵⁄₁₆ | 8⅜ | (12) #10 | 1,490 | |

These products are available with additional corrosion protection. Additional products on this page may also be available with this option. Check with Simpson Strong-Tie for details.

1. See *Fastening Systems* catalog (C-F-2019) on **strongtie.com** for more information on Simpson Strong-Tie fasteners.

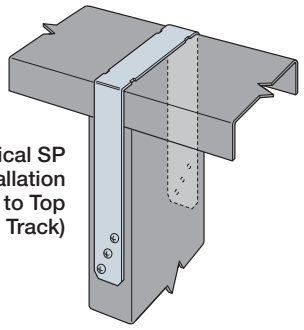

**Typical SP Installation (Wall to Top Track)**

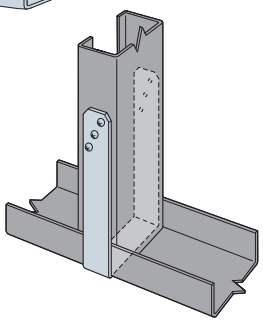

**Typical SP Installation (Wall to Bottom Track)**
*(SPH similar)*



C-CF-2020 ©2020 SIMPSON STRONG-TIE COMPANY INC.

# **S/H and H** Seismic and Hurricane Ties

SIMPSON Strong-Tie®

Designed to provide seismic and wind ties for trusses or joists, this versatile line may be used for general tie purposes, strongback attachments, and as all-purpose ties where one member crosses another.

**Material:** See table

**Finish:** Galvanized (G90). Available with ZMAX® coating; see Corrosion Information, pp. 17–19.

**Installation:** • Use all specified fasteners

- The S/H1 can be installed with flanges facing outwards (reverse of illustration 1) when installed inside a wall for truss applications
- Hurricane ties do not replace solid blocking
- S/H2.5, S/H3 and H6 ties are only shipped in equal quantities of rights and lefts

**Codes:** See p. 11 for Code Reference Key Chart

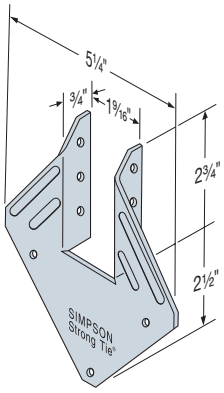


S/H1

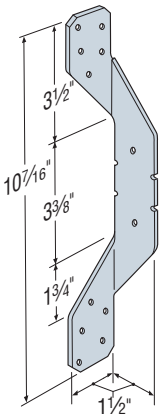


H2A

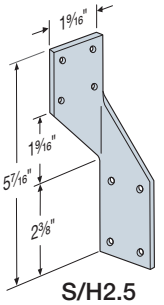


S/H2.5

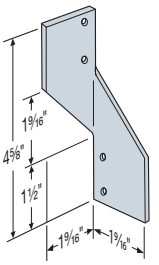


S/H3

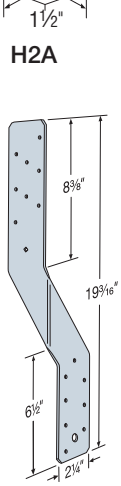


H6

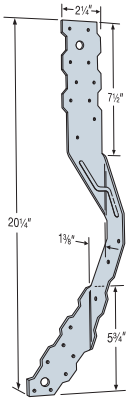


H7Z

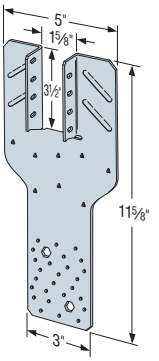


H10S

| Model No. | Connector Material Thickness mil (ga.) | Fasteners[5] | | | Allowable Load (lb.) 33 mil (20 ga.) | | | Code Ref. |
|---|---|---|---|---|---|---|---|---|
| | | To Rafters /Truss | To Top Track | To Stud | Uplift | Lateral $F_1$ | Lateral $F_2$ | |
| S/H1 | 43 (18) | (3) #10 | (2) #10 | (1) #10 | 305 | 100 | 115 | IBC, FL, LA |
| H2A | 43 (18) | (5) #10 | (1) #10 | (5) #10 | 450 | 90 | 100 | — |
| S/H2.5 | 43 (18) | (4) #10 | — | (4) #10 | 390 | 90 | 125 | |
| S/H3 | 43 (18) | (2) #10 | (2) #10 | — | 375 | 90 | 125 | |
| H6 | 54 (16) | — | (8) #10 | (8) #10 | 950 | — | — | |
| H7Z | 54 (16) | (4) #10 | (2) #10 | (8) #10 | 985 | — | — | |
| H10S[4] | 43 (18) | (8) #10 | — | (8) #10 | 930[3] | — | — | |

These products are available with additional corrosion protection. Additional products on this page may also be available with this option. Check with Simpson Strong-Tie for details.

1. Loads are based on attachment of cold-formed steel members having a minimum thickness of 33 mil (20 ga.).
2. Hurricane ties are shown installed on the outside of wall for clarity. Installation inside of wall is acceptable. For Continuous Load Path, connections in the same area must be on same side of wall.
3. For H10S connectors with CFS members having a minimum thickness of 43 mil (18 ga.), the allowable load is 1,260 lb.
4. H10S connectors can be installed ¾" (max.) from the center of the vertical stud per the in-line framing specifications of the AISI General Provisions for reduced uplift of 890 lb., provided that the screw edges are met.
5. See *Fastening Systems* catalog (C-F-2019) on **strongtie.com** for more information on Simpson Strong-Tie fasteners.

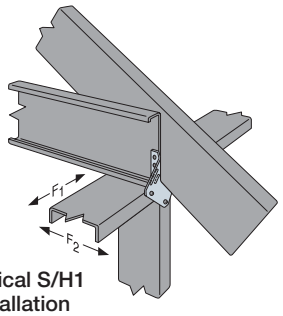


1 Typical S/H1 Installation

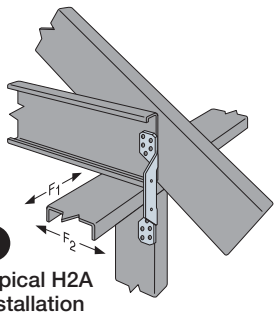


2 Typical H2A Installation

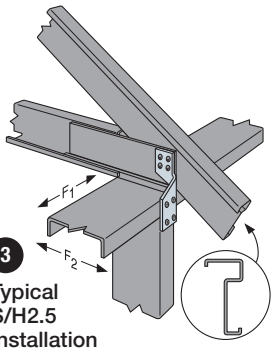


3 Typical S/H2.5 Installation

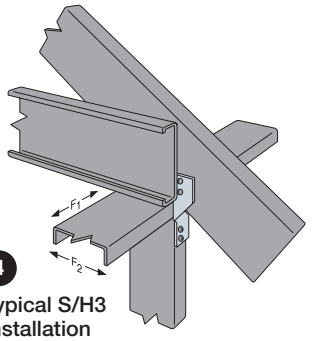


4 Typical S/H3 Installation

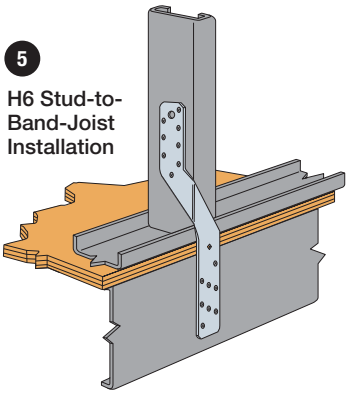

5 H6 Stud-to-Band-Joist Installation

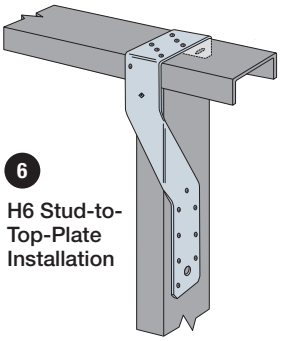

6 H6 Stud-to-Top-Plate Installation

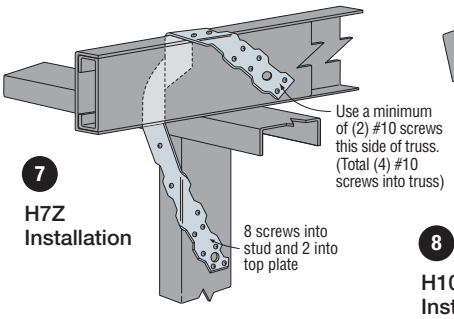


7 H7Z Installation

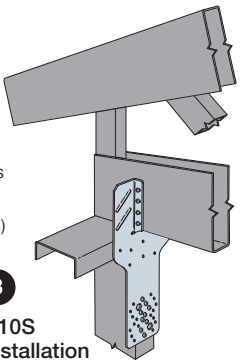

8 H10S Installation



C-CF-2020 ©2020 SIMPSON STRONG-TIE COMPANY INC.

# H Hybrid Connectors Seismic and Hurricane Ties for Wood Truss or Joist-to-CFS Wall

SIMPSON Strong-Tie®

Designed to provide seismic and wind ties for wood trusses or joists-to-CFS walls, this versatile line may be used for general purposes, strongback attachments, and as all-purpose ties where one member crosses another.

HS24 attaches the bottom chord of a truss or rafter at pitches from 0:12 to 4:12 to steel top plates.

**Material:** See table

**Finish:** Galvanized (G90). Selected products available in stainless steel or ZMAX® coating. See Corrosion Information, pp. 17–19.

**Installation:** • Use all specified fasteners; see General Notes

- H1 can be installed with flanges facing inward (reverse of illustration 1)
- Hurricane ties do not replace solid blocking
- H3 and H6 ties are only shipped in equal quantities of rights and lefts

**Codes:** See p. 11 for Code Reference Key Chart

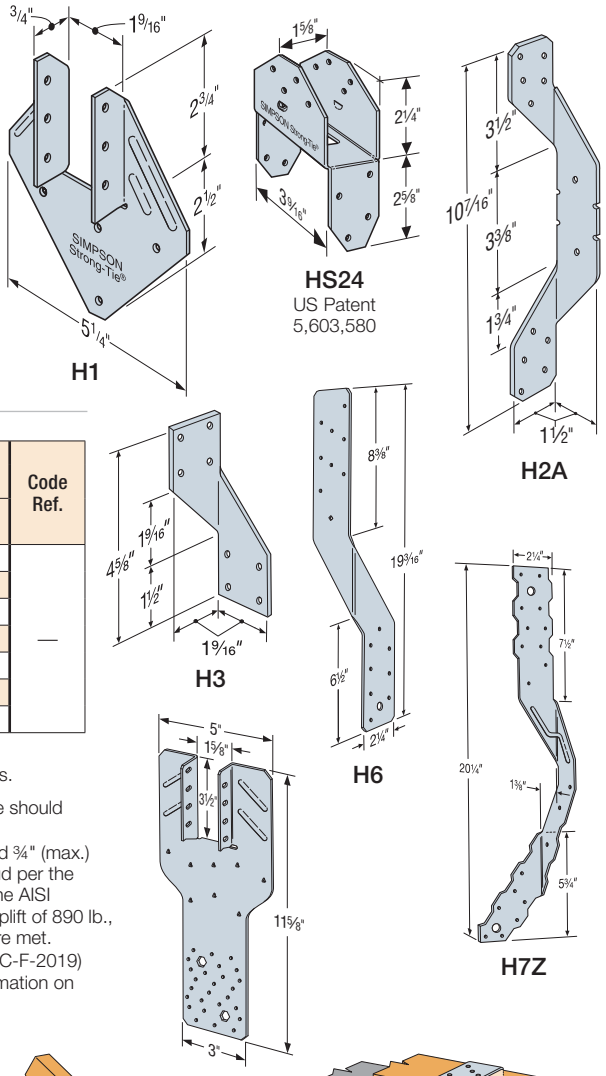


| Model No. | Connector Material Thickness mil (ga.) | Fasteners[5] To Rafters/ Truss | To Top Track | To Stud | Allowable Uplift Load 33 mil (20 ga.) (160) (lb.) DF/SP | SPF/HF | Code Ref. |
|---|---|---|---|---|---|---|---|
| H1 | 43 (18) | (6) 8d x 1½" | (3) #10 | (1) #10 | 600 | 500 | — |
| H2A | 43 (18) | (5) 8d x 1½" | (1) #10 | (5) #10 | 550 | 460 | |
| H3 | 43 (18) | (4) 8d x 1½" | (4) #10 | — | 365 | 305 | |
| H6 | 54 (16) | — | (8) 8d | (8) #10 | 950 | 820 | |
| H7Z | 54 (16) | (4) 8d x 1½" | (2) #10 | (8) #10 | 985 | 845 | |
| HS24 | 43 (18) | (8) 8d x 1½" | (4) #10 | (4) #10 | 625 | 520 | |
| H10S[5] | 43 (18) | (8) 8d x 1½" | — | (8) #10 | 930 | 780 | |

These products are available with additional corrosion protection. Additional products on this page may also be available with this option. Check with Simpson Strong-Tie for details.

1. Allowable loads on wood have been increased 60% for wind or earthquake loading with no further increase allowed; reduce where other load duration factors govern.
2. Hurricane Ties are shown installed on the outside of wall for clarity. Installation inside of wall is acceptable. For Continuous Load Path, connections must be on same side of wall.
3. When cross-grain bending or cross-grain tension cannot be avoided, mechanical reinforcement to resist such force should be considered.
4. H10S connectors can be installed ¾" (max.) from the center of the vertical stud per the in-line framing specifications of the AISI General Provisions for reduced uplift of 890 lb., provided that the screw edges are met.
5. See *Fastening Systems* catalog (C-F-2019) on **strongtie.com** for more information on Simpson Strong-Tie fasteners.

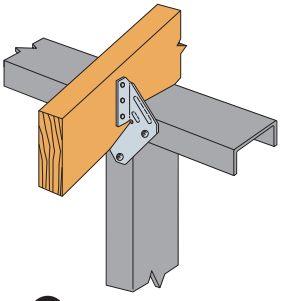

1 H1 Installation

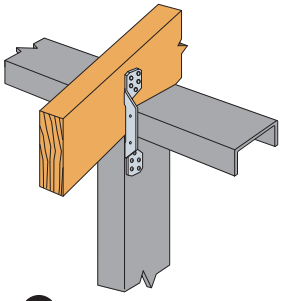

2 H2A Installation

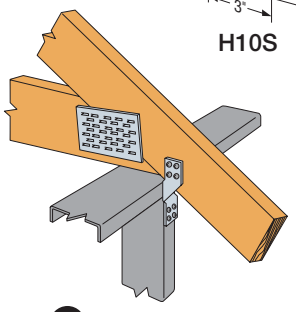

3 H3 Installation

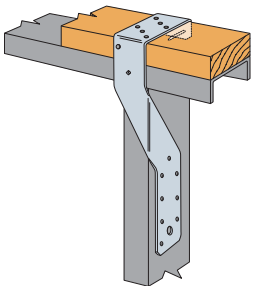

4 H6 Stud-to-Top-Plate Installation

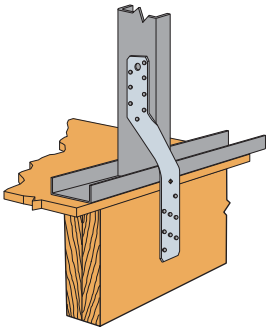

5 H6 Stud-to-Band-Joist Installation

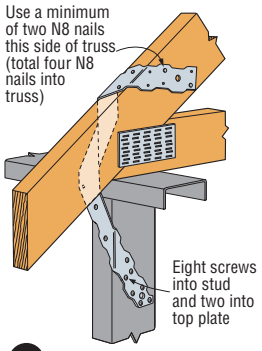


6 H7Z Installation

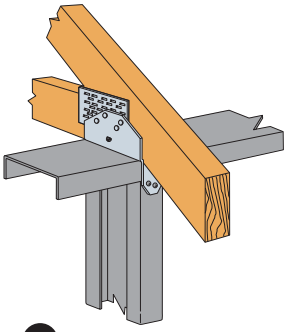

7 HS24 Installation

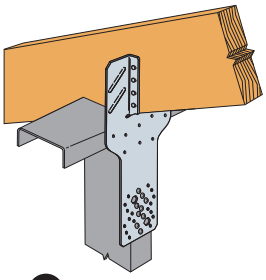

8 H10S Installation



C-CF-2020 ©2020 SIMPSON STRONG-TIE COMPANY INC.

# **S/H1A** Seismic and Hurricane Ties

S/H1A is designed to fit within several proprietary truss chords to provide uplift resistance.

**Material:** 43 mil (18 ga.)

**Finish:** Galvanized (G90)

**Installation:**

- Use all specified fasteners.
- S/H1A can be installed with flanges facing outwards, reverse of illustration, when installed inside a wall for truss applications.
- S/H1A does not replace solid blocking.
- S/H1A may be used with proprietary truss sections. Contact material supplier for specific installation details.

**Codes:** See p. 11 for Code Reference Key Chart

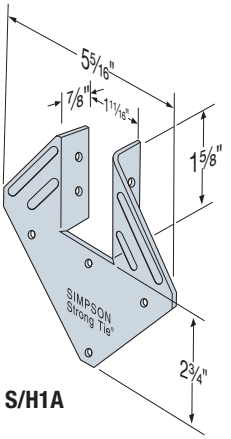


**S/H1A**

| Model No. | Fasteners[2] | | | Truss Thickness mil (ga.) | Allowable Uplift Load (lb.) | | | Code Ref. |
|---|---|---|---|---|---|---|---|---|
| | | | | | Plate/Wall Stud Thickness mil (ga.) | | | |
| | Truss | Top Track | Stud | | 33 mil (20 ga.) | 43 mil (18 ga.) | 54 mil (16 ga.) | |
| S/H1A | (4) #10 | (3) #10 | (1) #10 | 27 (22) | 470 | 470 | 470 | IBC, FL, LA |
| | (4) #10 | (3) #10 | (1) #10 | 33 (20) | 510 | 550 | 690 | |
| | (4) #10 | (3) #10 | (1) #10 | 43 (18) | 510 | 550 | 690 | |
| | (4) #10 | (3) #10 | (1) #10 | 54 (16) | 520 | 675 | 850 | |

1. Tabulated loads based on truss members with yield strength, $F_y$, of 50 ksi and tensile strength, $F_u$, of 65 ksi. Reduce tabulated load proportionally for lower truss member steel strength. For example: 43 mil (18 ga.) truss member with a yield strength, $F_y$, of 33 ksi and a tensile strength, $F_u$, of 45 ksi is connected to 43 mil top track and wall stud. The adjusted allowable load is then 550 lb. x minimum [33/ 50 or 45/ 60] = 363 lb.
2. See *Fastening Systems* catalog (C-F-2019) on **strongtie.com** for more information on Simpson Strong-Tie fasteners.

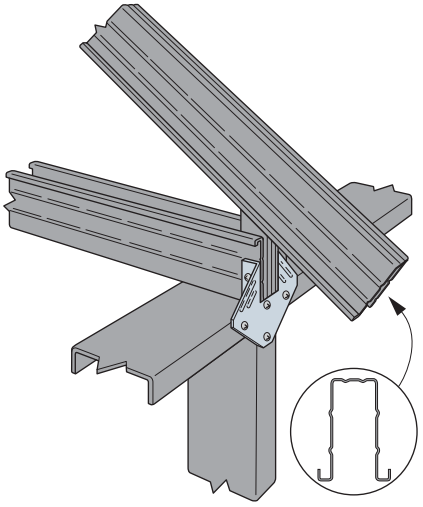

Typical S/H1A Installation

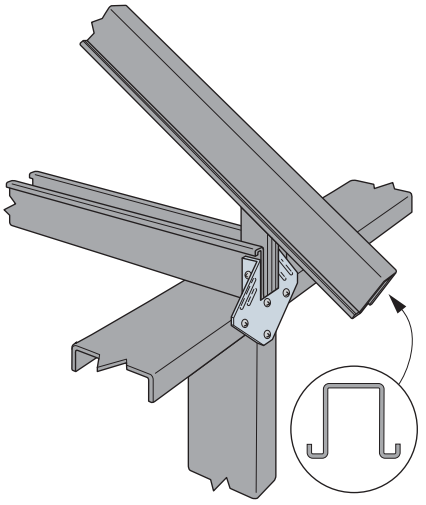

Typical S/H1A Installation



C-CF-2020 ©2020 SIMPSON STRONG-TIE COMPANY INC.

# **MTSM/HTSM** Twist Straps

The MTSM and HTSM offer high-strength truss-to-masonry connections.

**Material:** See table.

**Finish:** Galvanized (G90). Some products available in stainless steel and ZMAX®; see Corrosion Information, pp. 17–19.

**Installation:**

- Use all specified fasteners; see General Notes.
- May be attached to either side of a grouted block wall. A minimum of one #5 horizontal rebar shall be installed in the top course of this wall.

**Codes:** See p. 11 for Code Reference Key Chart

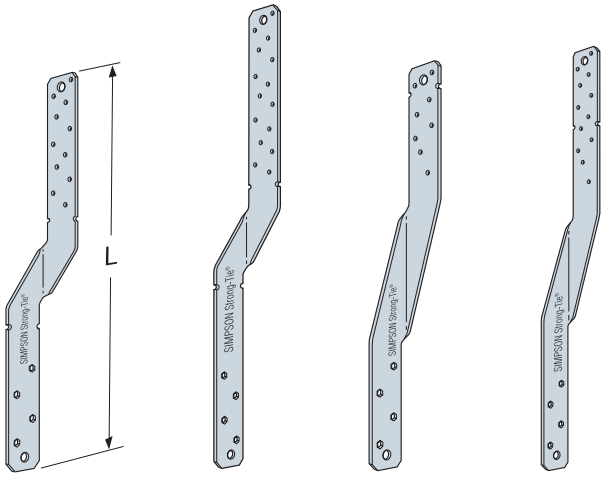


MTSM16 MTSM20 HTSM16 HTSM20

| Model No. | Connector Material Thickness mil (ga.) | L (in.) | Fasteners[6] | | | | | Allowable Load 33 mil (20 ga.) (lb.) | Code Ref. |
|---|---|---|---|---|---|---|---|---|---|
| | | | Rafter/Stud/Joist Thickness | | | CMU[5] | Concrete[3,5] | | |
| | | | 33 mil (20 ga.) | 43 mil (18 ga.) | 54 mil (16 ga.) | | | | |
| MTSM16 | 54 (16) | 16 | (5) #10 | (4) #10 | (3) #10 | (4) ¼" x 2¼" Titen 2 | (4) ¼" x 1¼" Titen 2 | 860 | — |
| MTSM20 | | 20 | (5) #10 | (4) #10 | (3) #10 | (4) ¼" x 2¼" Titen 2 | (4) ¼" x 1¼" Titen 2 | 860 | |
| HTSM16 | 68 (14) | 16 | (7) #10 | (5) #10 | (3) #10 | (4) ¼" x 2¼" Titen 2 | (4) ¼" x 1¼" Titen 2 | 1,175 | |
| HTSM20 | | 20 | (7) #10 | (5) #10 | (3) #10 | (4) ¼" x 2¼" Titen 2 | (4) ¼" x 1¼" Titen 2 | 1,175 | |

1. All straps have additional fastener holes.
2. Twist straps do not have to be wrapped over the truss to achieve the load.
3. Minimum edge distance in concrete block for Titen® 2 screws is 1½".
4. Straps can be installed on the inside face of the wall.
5. Min. $f'_m$ = 1,500 psi and $f'_c$ = 2,500 psi.
6. See *Fastening Systems* catalog (C-F-2019) on **strongtie.com** for more information on Simpson Strong-Tie fasteners.

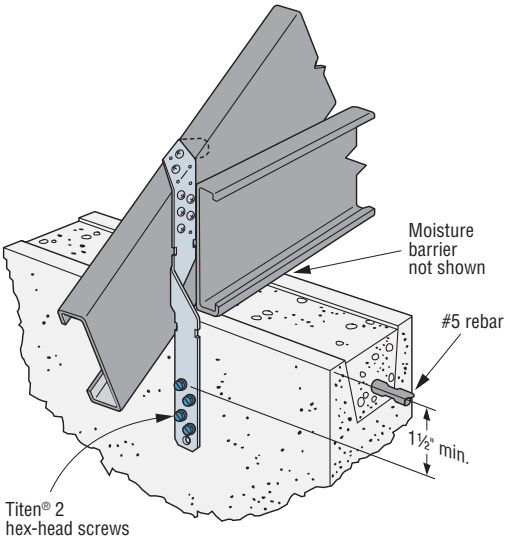


**Typical MTSM20 Installation**

C-CF-2020 ©2020 SIMPSON STRONG-TIE COMPANY INC.

# **META/HETA/HHETA** Embedded Truss Anchors

The embedded truss anchor series provides an engineered method to properly attach roof trusses to concrete and masonry walls. Information regarding the use of two anchors on single- and multi-ply trusses is included below.

**Material:** HHETA — 14 gauge; HETA — 16 gauge; META — 18 gauge

**Finish:** Galvanized (G90). Some products available in ZMAX® coating; see Corrosion Information on pp. 17–19.

**Installation:**

- Use all specified fasteners; see General Notes.
- The META, HETA and HHETA are embedded 4" into a 6" minimum concrete beam or 8" nominal grouted block wall.
- For mislocated truss anchors which are greater than ⅛" but less than 1½" from the face of the truss, a shim must be provided. Shim design by Truss Engineer. When gap is greater than 1½", install retrofit anchors.
- In double embedded anchor installations, do not install fasteners where the straps overlap when wrapped over the truss heel.

**Codes:** See p. 11 for Code Reference Key Chart

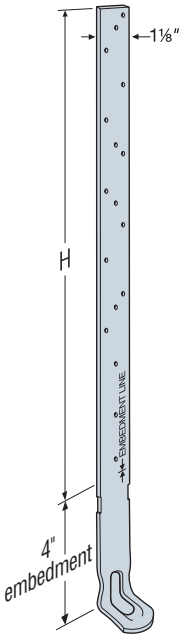


**HETA20**
*(META/HHETA similar)*

## Single Embedded Anchor Installation

| Model No. | H (in.) | Fastener[9] | Allowable Uplift Load (lb.) | | | Lateral Load[8] | | Code Ref. |
|---|---|---|---|---|---|---|---|---|
| | | Rafter/Stud/Truss Thickness | Rafter/Stud/Truss Thickness | | | $F_1$ | $F_2$ | |
| | | 33 mil, 43 mil and 54 mil (20 ga., 18 ga. and 16 ga.) | 33 mil (20 ga.) | 43 mil (18 ga.) | 54 mil (16 ga.) | 54 mil (16 ga.) | | |
| META12 | 8 | (7) #10 | 1,240 | 1,450 | 1,450 | 340 | 725 | — |
| META16 | 12 | (9) #10 | 1,450 | 1,450 | 1,450 | | | |
| META18 | 14 | (9) #10 | 1,450 | 1,450 | 1,450 | | | |
| META20 | 16 | (9) #10 | 1,450 | 1,450 | 1,450 | | | |
| META22 | 18 | (9) #10 | 1,450 | 1,450 | 1,450 | | | |
| META24 | 20 | (9) #10 | 1,450 | 1,450 | 1,450 | | | |
| META40 | 36 | (9) #10 | 1,450 | 1,450 | 1,450 | | | |
| HETA12 | 8 | (7) #10 | 1,240 | 1,780 | 1,780 | 340 | 725 | |
| HETA16 | 12 | (9) #10 | 1,595 | 1,810 | 1,810 | | | |
| HETA20 | 16 | (9) #10 | 1,595 | 1,810 | 1,810 | | | |
| HETA24 | 20 | (9) #10 | 1,595 | 1,810 | 1,810 | | | |
| HETA40 | 36 | (9) #10 | 1,595 | 1,810 | 1,810 | | | |
| HHETA12 | 8 | (7) #10 | 1,240 | 1,820 | 1,820 | 340[5] | 815 | |
| HHETA16 | 12 | (10) #10 | 1,770 | 2,235 | 2,235 | | | |
| HHETA20 | 16 | (10) #10 | 1,770 | 2,235 | 2,235 | | | |
| HHETA24 | 20 | (10) #10 | 1,770 | 2,235 | 2,235 | | | |
| HHETA40 | 36 | (10) #10 | 1,770 | 2,235 | 2,235 | | | |

These products are available with additional corrosion protection. Additional products on this page may also be available with this option. Check with Simpson Strong-Tie for details.

1. Allowable loads may not be increased for wind or seismic load.
2. Minimum $f'_c$ = 2,500 psi. Minimum $f'_m$ = 1,500 psi.
3. For simultaneous loads in more than one direction, the connector must be evaluated as described in Note d, p. 14 under Instructions to the designer.
4. It is acceptable to use a reduced number of fasteners provided that there is a reduction in uplift load capacity. Lateral loads do not apply when fewer fasteners are used.
5. The HHETA allowable $F_1$ load can be increased to 435 lb. if the strap is wrapped over the truss and a minimum of 12 fasteners are installed.
6. Minimum spacing for multiple anchor installation is two times the embedment depth for full load. See Double Embedded Anchor Installation table on p. 193 for loads on closer spaced anchors.
7. Minimum edge distance is 1½" for concrete and 2" masonry.
8. Lateral loads are limited to 54 mil (16 ga.) CFS members.
9. See *Fastening Systems* catalog (C-F-2019) on **strongtie.com** for more information on Simpson Strong-Tie fasteners.



C-CF-2020 ©2020 SIMPSON STRONG-TIE COMPANY INC.

# **META/HETA/HHETA** Embedded Truss Anchors

SIMPSON Strong-Tie®

## Double Embedded Anchor Installation

| Model No. | Qty. | Application | Fasteners[8] Rafter/Stud/Truss Thickness | Allowable Uplift Load (lb.) | | | Lateral Load[7] | |
|---|---|---|---|---|---|---|---|---|
| | | | | | | | $F_1$ | $F_2$ |
| | | | 33 mil, 43 mil and 54 mil (20 ga., 18 ga. and 16 ga.) | 33 mil (20 ga.) | 43 mil (18 ga.) | 54 mil (16 ga.) | 54 mil (16 ga.) | |
| **1 ½" Width Minimum of Rafter/Stud/Truss** | | | | | | | | |
| META | 2 | CMU | (10) #10 | 1,770 | 1,985 | 1,985 | 340 | 725 |
| | | Concrete | (10) #10 | 1,770 | 1,985 | 1,985 | | |
| HETA | 2 | CMU | (10) #10 | 1,770 | 2,035 | 2,035 | 340 | 725 |
| | | Concrete | (10) #10 | 1,770 | 2,035 | 2,035 | | |
| HHETA | 2 | CMU | (10) #10 | 1,770 | 2,035 | 2,035 | 340 | 815 |
| | | Concrete | (10) #10 | 1,770 | 2,235 | 2,235 | | |
| **3" Width Minimum of Rafter/Stud/Truss** | | | | | | | | |
| META | 2 | CMU | (14) #10 | 1,900 | 1,900 | 1,900 | 1,210 | 1,160 |
| | | Concrete | (14) #10 | 2,480 | 2,565 | 2,565 | | |
| HETA | 2 | CMU | (12) #10 | 2,480 | 2,500 | 2,500 | 1,225 | 1,520 |
| | | Concrete | (12) #10 | 2,480 | 2,700 | 2,700 | | |
| HHETA | 2 | CMU | (12) #10 | 2,480 | 2,500 | 2,500 | 1,225 | 1,520 |
| | | Concrete | (12) #10 | 2,480 | 3,050 | 3,050 | | |
| | | Concrete | (14) #10 | 2,480 | 3,350 | 3,350 | | |

1. Allowable loads may not be increased for wind or seismic load.
2. Minimum $f'_c$ = 2,500 psi. Minimum $f'_m$ = 1,500 psi.
3. For simultaneous loads in more than one direction, the connector must be evaluated as described in Note d, p. 14 under General Instructions to the Designer.
4. Minimum spacing for multiple anchor installation is two times the embedment depth for full load. See Double Embedded Anchor Installation table for loads on closer spaced anchors.
5. Install with spoons facing outward and straps spaced no more than ⅛" wider than the truss width.
6. $F_1$ lateral loads listed may cause an additional ¹⁄₁₆" deflection beyond the standard ⅛" limit there the straps are installed not wrapped over the heel as shown.
7. Lateral loads are limited to 54 mil (16 ga.) CFS members.
8. See *Fastening Systems* catalog (C-F-2019) on **strongtie.com** for more information on Simpson Strong-Tie fasteners.

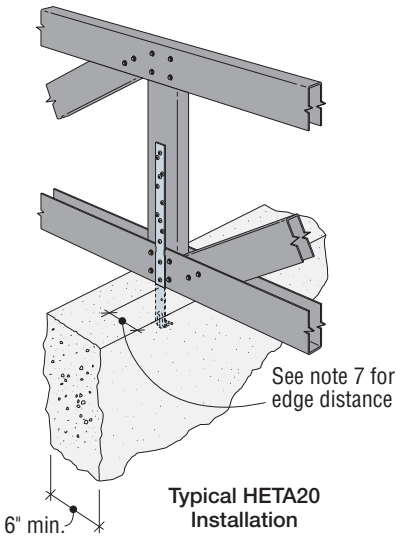


Typical HETA20 Installation

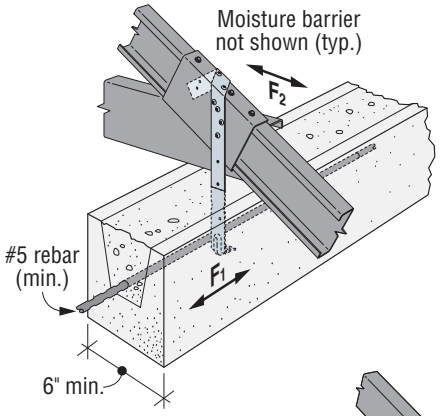


Typical META Installation

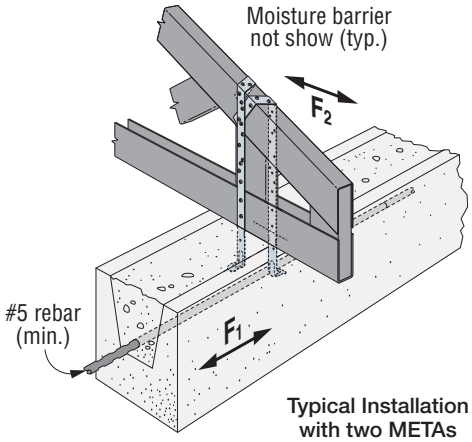


Typical Installation with two METAs

C-CF-2020 ©2020 SIMPSON STRONG-TIE COMPANY INC.

# **LTS/MTS/HTS** Twist Straps

SIMPSON Strong-Tie®

Twist straps provide a tension connection between two members. They resist uplift at the heel of a truss economically. LTS/ MTS have a 2"-bend section and HTS has a 3¾"-bend section that eliminates interference at the transition points between the two members.

**Material:** See table

**Finish:** Galvanized (G90). Some products available in stainless steel and ZMAX®; see Corrosion Information, pp. 17–19.

**Installation:**

- Use all specified fasteners; see General Notes.
- LTS, MTS and HTS are available with the bend reversed. Specify "–REV" after the model number, such as MTS16-REV.

**Codes:** See p. 11 for Code Reference Key Chart

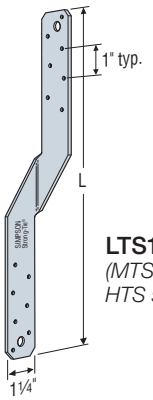


**LTS12**
*(MTS and HTS similar)*

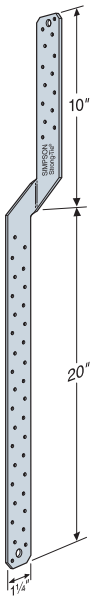


**MTS30**
*(HTS30 similar)*

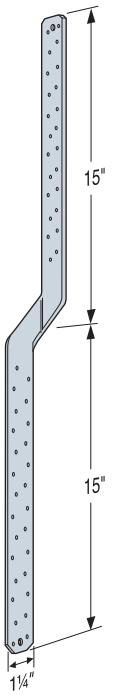


**MTS30C**
*(HTS30C similar)*

| Model No. | Connector Material Thickness mil (ga.) | L (in.) | Fasteners[6] (Total) | | | Allowable Tension Load (lb.) | Code Ref. |
|---|---|---|---|---|---|---|---|
| | | | Rafter/Stud/Joist Thickness | | | 33 mil (20 ga.) | |
| | | | | | | 43 mil (18 ga.) | |
| | | | 33 mil (20 ga.) | 43 mil (18 ga.) | 54 mil (16 ga.) | 54 mil (16 ga.) | |
| LTS12 | 43 (18) | 12 | (10) #10 | (6) #10 | (6) #10 | 775 | IBC, FL, LA |
| LTS16 | | 16 | (10) #10 | (6) #10 | (6) #10 | 775 | |
| LTS18 | | 18 | (10) #10 | (6) #10 | (6) #10 | 775 | |
| LTS20 | | 20 | (10) #10 | (6) #10 | (6) #10 | 775 | |
| MTS12 | 54 (16) | 12 | (12) #10 | (8) #10 | (6) #10 | 995 | |
| MTS16 | | 16 | (12) #10 | (8) #10 | (6) #10 | 995 | |
| MTS18 | | 18 | (12) #10 | (8) #10 | (6) #10 | 995 | |
| MTS20 | | 20 | (12) #10 | (8) #10 | (6) #10 | 995 | |
| MTS30 | | 30 | (12) #10 | (8) #10 | (6) #10 | 995 | |
| MTS24C | | 24 | (12) #10 | (8) #10 | (6) #10 | 995 | |
| MTS30C | | 30 | (12) #10 | (8) #10 | (6) #10 | 995 | |
| HTS16 | 68 (14) | 16 | (16) #10 | (12) #10 | (6) #10 | 1,415 | |
| HTS20 | | 20 | (18) #10 | (12) #10 | (6) #10 | 1,450 | |
| HTS24 | | 24 | (18) #10 | (12) #10 | (6) #10 | 1,450 | |
| HTS30 | | 30 | (18) #10 | (12) #10 | (6) #10 | 1,450 | |
| HTS30C | | 30 | (18) #10 | (12) #10 | (6) #10 | 1,450 | |

These products are available with additional corrosion protection. Additional products on this page may also be available with this option. Check with Simpson Strong-Tie for details.

1. Not all fastener holes need to be filled, as additional fastener holes are provided. Install fasteners symmetrically.
2. Install half of the fasteners on each end of strap to achieve full loads.
3. All straps except the MTS30 and HTS30 have the twist in the center of the strap.
4. Twist straps do not have to be wrapped over the truss to achieve the load.
5. May be installed on the inside face of the stud.
6. See *Fastening Systems* catalog (C-F-2019) on **strongtie.com** for more information on Simpson Strong-Tie fasteners.

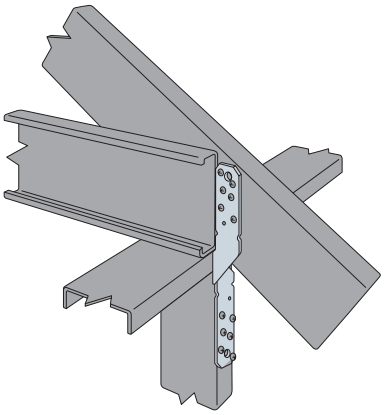

**Typical MTS Installation Truss to Steel Studs**



C-CF-2020 ©2020 SIMPSON STRONG-TIE COMPANY INC.

# **VGT and S/VGT2.5** Variable-Pitch Girder Tiedown

The variable-pitch girder tiedown, S/VGT2.5, is a high-capacity tiedown for single- or multi-ply CFS girder trusses. It attaches with self-drilling screws from the side of the truss. The VGT uses Simpson Strong-Tie® Strong-Drive® SDS Heavy-Duty Connector screws for wood truss applications. They both feature a predeflected crescent washer that allows them to accommodate top-chord pitches up to 8/12.

**Material:** 171 mil (7 ga.)

**Finish:** Galvanized (G90)

**Installation:**

- Use all specified fasteners
- Screw holes are configured to allow for double installation on multi-member girders
- Install washer component (provided) so that top of washer is horizontal and parallel with top of wall

**Codes:** See p. 11 for Code Reference Key Chart

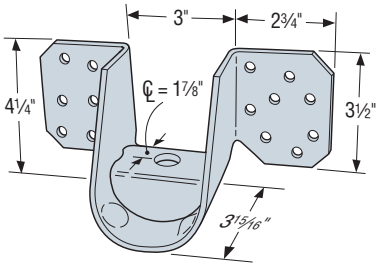


**VGT**
US Patent 7,707,785

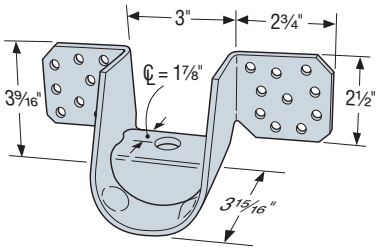


**S/VGT2.5**
US Patent 7,707,785

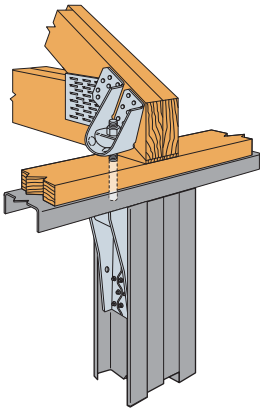

**Typical Hybrid VGTR Single Installation with S/HDU4**

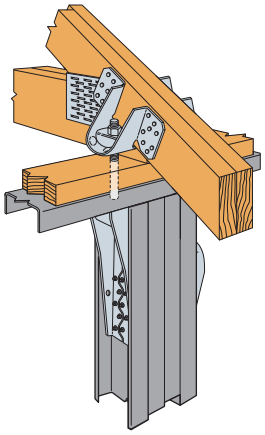

**Typical Hybrid VGT Double Installation with S/HDU6**

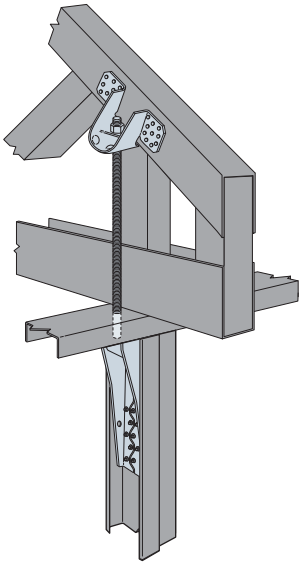

**Typical S/VGT2.5 Single Installation with HDU6**

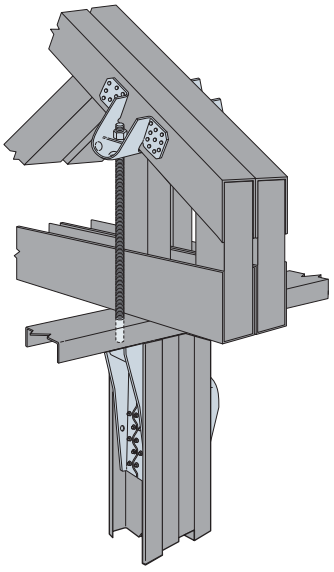

**Typical S/VGT2.5 Double Installation with S/HDU6**

| Model No. | Quantity | No. of Truss Plies | Fasteners[5] | | Allowable Uplift Load[2] (lb.) | | Code Ref. |
|---|---|---|---|---|---|---|---|
| | | | Anchor Dia. | Girder Truss | 3/12 | 8/12 | |
| Cold-Formed Steel Connection | | | | | 54 mil (16 ga.) | | |
| S/VGT2.5 (min.)[4] | 1 | 1 | (1) ⅝ | (16) #14 | 3,050 | 2,620 | — |
| | 2 | 2 | (2) ⅝ | (32) #14 | 6,100 | 5,240 | |
| S/VGT2.5 (max.) | 1 | 1 | (1) ⅝ | (20) #14 | 3,860 | 3,130 | |
| | 2 | 2 | (2) ⅝ | (40) #14 | 7,720 | 6,260 | |
| Hybrid Connection | | | | | Allowable Uplift Load[3] up to 8/12 (lb.) | | Code Ref. |
| | | | | | DF/SP (160) | SPF/HF (160) | |
| VGT | 1 | 2 | (1) ⅝ | (16) ¼" x 3" SDS | 4,940 | 3,555 | FL |
| | 2 | 2 | (2) ⅝ | (32) ¼" x 3" SDS | 7,185 | 5,175 | |
| | 2 | 3 | (2) ⅝ | (32) ¼" x 3" SDS | 8,890 | 6,400 | |
| VGTR/L | 1 | 2 | (1) ⅝ | (16) ¼" x 3" SDS | 2,230 | 1,605 | |
| | 2 | 2 | (2) ⅝ | (32) ¼" x 3" SDS | 5,545 | 3,990 | |

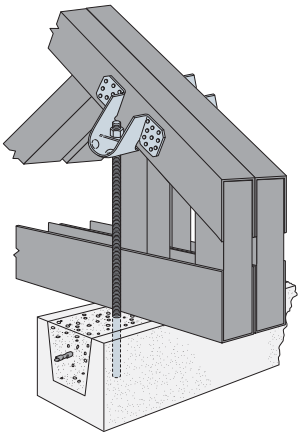

**Typical S/VGT2.5 Installation in CMU**

1. Designer shall insure attached members are adequately designed to resist applied loads.
2. Straight-line interpolation can be used to determine allowable loads for pitches between 3/12 and 8/12.
3. Allowable loads on wood have been increased 60% for wind or earthquake loading with no further increase allowed; reduce where other load duration factors govern.
4. For (min.) tabulated values, not all screw holes need to be filled. Install screws symmetrically.
5. See *Fastening Systems* catalog (C-F-2019) on **strongtie.com** for more information on Simpson Strong-Tie fasteners.



C-CF-2020 ©2020 SIMPSON STRONG-TIE COMPANY INC.

# LTA2, S/HGAM10 and H10S Seismic and Hurricane Ties

The LTA2 develops high uplift at a minimum heel height. Great in areas where a strap over the heel is not required. The side tab acts as a locator in the masonry block and the four embedded hooks provide for a positive bond in the concrete grout.

The H10S and the S/HGAM10 attaches to truss joist and provides good uplift resistance.

**Material:** See table

**Finish:** Galvanized (G90)

**Installation:**

- Use all specified fasteners; see General Notes.
- S/HGAM10 can be installed into grouted concrete block.
- Titen® 2 screws are provided.
- Hurricane ties do not replace solid blocking.
- Attach to grouted concrete block with a minimum one #5 rebar horizontal in the top lintel block.

**Codes:** See p. 11 for Code Reference Key Chart

**Ordering Information:**

- The HGAM10KT is a kit of (10) connectors with (40) ¼" x 2¾" Titen 2 screws.

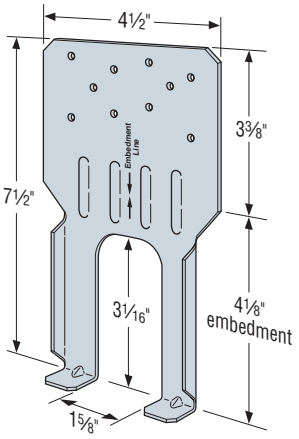


**LTA2**
US Patent 6,560,943

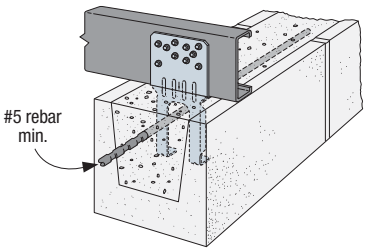


**Typical LTA2 Installation**
*(perpendicular to wall)*

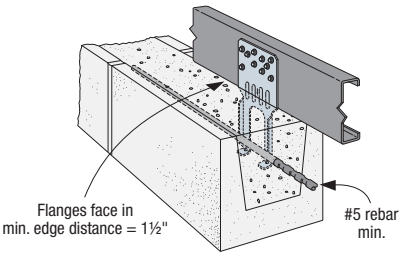


**Typical LTA2 Installation**
*(parallel to wall)*

| Model No. | Connector Material Thickness mil (ga.) | Fasteners[5] | | | Allowable Uplift Load (lb.) | | Code Ref. |
|---|---|---|---|---|---|---|---|
| | | To Rafter/ Truss[5] | To CMU | To Concrete | 33 mil (20 ga.) | 43 mil (18 ga.) | |
| LTA2 perpendicular-to-wall installation | 43 (18) | (10) #10 | Embed | Embed | 1,295 | 1,425 | — |
| LTA2 parallel-to-wall installation | 43 (18) | (10) #10 | Embed | Embed | 1,295 | 1,390 | |
| S/HGAM10KT | 68 (14) | (4) #14 | (4) ¼" x 2¾" Titen 2 | (4) ¼" x 1¾" Titen 2 | 810 | 850 | IBC, FL, LA |
| H10S | 43 (18) | (8) #10 | (2) ⅜" x 4" Titen HD | (2) ⅜" x 4" Titen HD | 915 | 1,245 | |

1. Min. $f'_m$ = 1,500 psi and $f'_c$ = 2,500 psi.
2. Minimum edge distance is 1½" for Titen® 2 screws.
3. The products shall be installed such that the Titen 2 screws and Titen HD® anchors are not exposed to the weather.
4. Visit **strongtie.com** for Titen 2 screw and Titen HD information.
5. See *Fastening Systems* catalog (C-F-2019) on **strongtie.com** for more information on Simpson Strong-Tie fasteners.

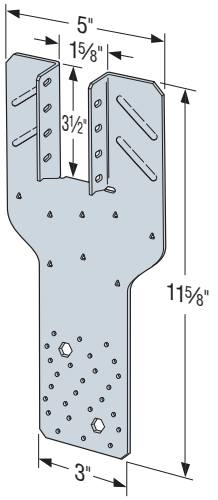


**H10S**

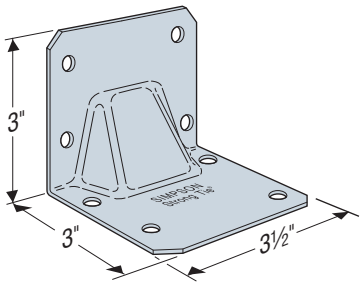


**S/HGAM10**

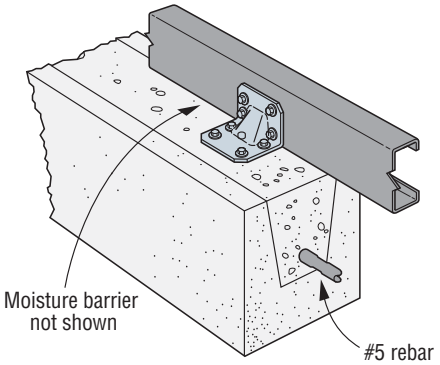


**Typical S/HGAM10 Installation**

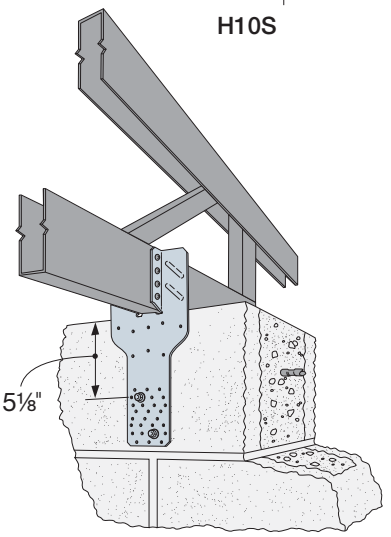


**H10S Installation**



C-CF-2020 ©2020 SIMPSON STRONG-TIE COMPANY INC.

# **TJC** Jack Truss and Rafter Connector

TJC is a versatile connector for skewed members. Adjustable from 0° to 67.5° (shipped with 67.5° bend). Screw hole locations allow for easy installation.

**Material:** 54 mil (16 ga.)

**Finish:** Galvanized (G90)

**Installation:**

- Use all specified fasteners; see General Notes
- Position the skewed member on the inside of the bend line with the end of the member flush with the bend line
- Bend the TJC to the desired position (one bend cycle only)

**Codes:** See p. 11 for Code Reference Key Chart

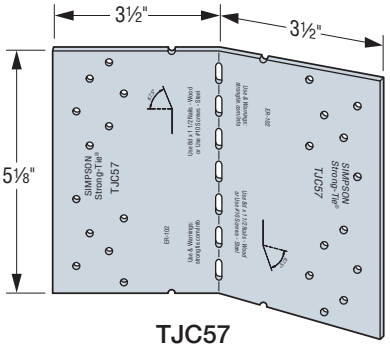


TJC57

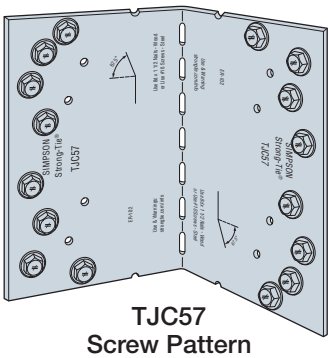

TJC57
Screw Pattern

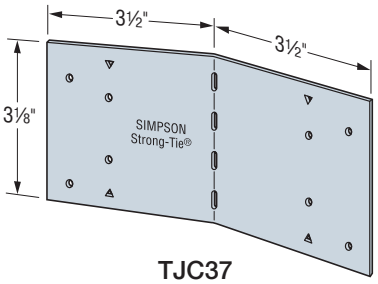


TJC37

| Model No. | Fasteners[2] | | Member Thickness mil (ga.) | Allowable Load $F_4$ (lb.) | | | Code Ref. |
|---|---|---|---|---|---|---|---|
| | Carrying Member | Carried Member | | 0° | 1°–60° | 61°–67.5° | |
| TJC37 (min.) | (4) #10 | (4) #10 | 43 (18) | 660 | 565 | 475 | IBC, FL, LA |
| TJC37 (max.) | (6) #10 | (6) #10 | 43 (18) | 680 | 630 | 530 | |
| TJC57 (min.) | (8) #10 | (8) #10 | 43 (18) | 1,295 | 1,215 | 1,235 | — |
| TJC57 (max.) | (8) #10 | (8) #10 | 54 (16) | 1,790 | 1,790 | 1,790 | |

1. Reference the illustration for the required screw pattern of the TJC57.
2. See *Fastening Systems* catalog (C-F-2019) on **strongtie.com** for more information on Simpson Strong-Tie fasteners.

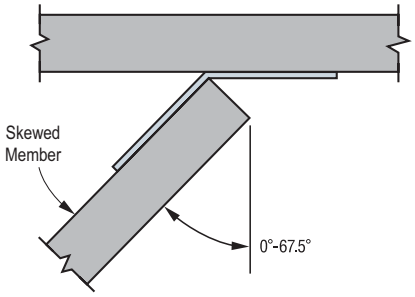


Top View Installation

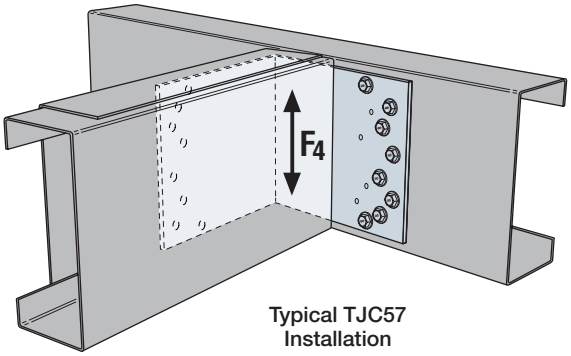


Typical TJC57
Installation



C-CF-2020 ©2020 SIMPSON STRONG-TIE COMPANY INC.

# **LS and S/LS** Skewable Angles

LS and S/LS skewable angles are a cost effective method for connecting roof rafters to hip rafters.

**Material:** 43 mil (18 ga.)

**Finish:** Galvanized (G90)

**Installation:**

- Use all specified fasteners
- Field-skewable; bend one time only

**Codes:** See p. 11 for Code Reference Key Chart

| Model No. | Length (in.) | Fasteners[2] | Allowable Load (lb.) | | | Code Ref. |
|---|---|---|---|---|---|---|
| | | | 33 mil (20 ga.) | 43 mil (18 ga.) | 54 mil (16 ga.) | |
| | | | $F_4$ | $F_4$ | $F_4$ | |
| LS30 | 3⅞ | (6) #10 | 200 | 370 | 500 | — |
| S/LS50 | 4⅞ | (4) #10 | 200 | 370 | 500 | |
| S/LS70 | 6⅜ | (6) #10 | 465 | 575 | 715 | |
| LS90 | 7⅞ | (12) #10 | 465 | 895 | 915 | |

1. Loads are for one part only.
2. See *Fastening Systems* catalog (C-F-2019) on **strongtie.com** for more information on Simpson Strong-Tie fasteners.

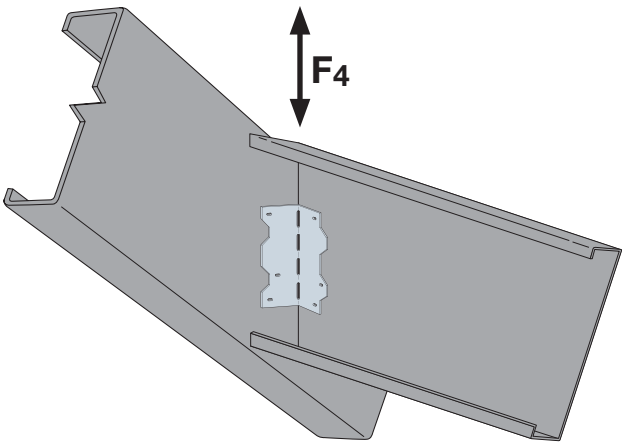


Typical Installation Between Roof Rafter and Hip Rafter

# **AHEP** Adjustable Hip-End Purlin

The Simpson Strong-Tie AHEP is a structural purlin that also serves as an installation aid during the truss-erection process. The AHEP attaches to the step-down hip trusses at the leading edge, eliminating the need for drop top chords and C-stud fillers. The AHEP installs linearly, aligned with the end jacks, to maintain sheathing spacing from eave to hip or peak. Roof sheathing/decking attaches directly to the purlin. Adjustable in length, the AHEP is designed to accommodate a pitch range of 3/12 to 9/12.

**Material:** 33 mil (20 ga.)

**Finish:** Galvanized

**Installation:**

- Use all specified fasteners; see General Notes

**Codes:** See p. 11 for Code Reference Key Chart

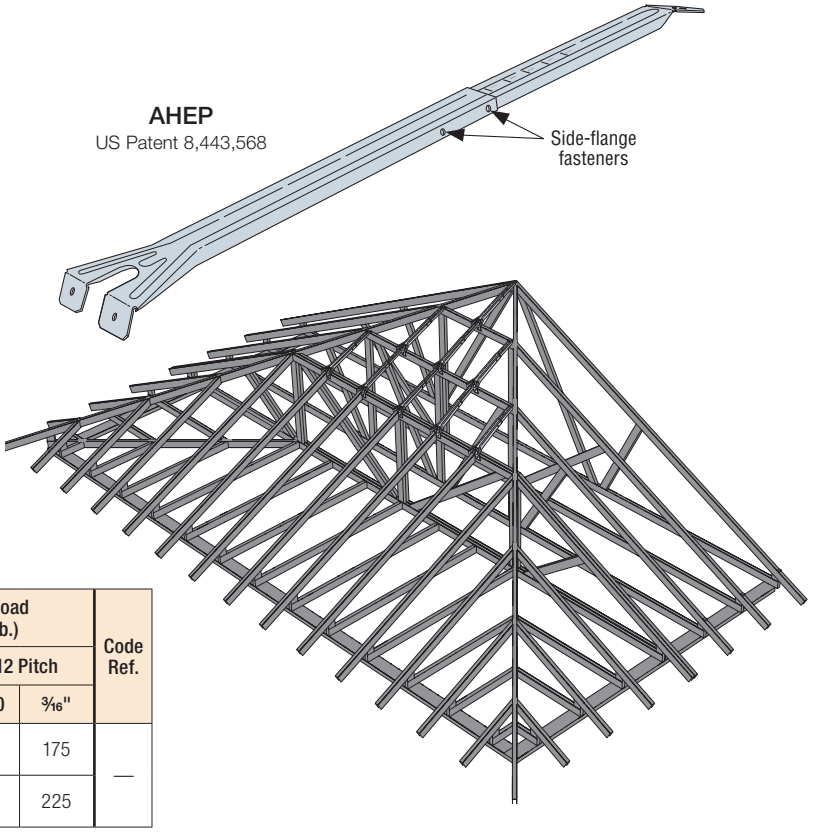


| Model No. | Fasteners[3] | | Sheathing Option | Allowable Down Load 33 mil (20 ga.) (lb.) | | | | Code Ref. |
|---|---|---|---|---|---|---|---|---|
| | Side Flanges | Truss Ends | | 3/12 Pitch | | 9/12 Pitch | | |
| | | | | L/180 | 3⁄16" | L/180 | 3⁄16" | |
| AHEP | (4) #10 | (4) #10 | None | 285 | 360 | 160 | 175 | — |
| | | | ½" wood sheathing | 285 | 360 | 205 | 225 | |

1. Designer shall ensure attached members are adequately designed to resist applied loads.
2. Straight-line interpolation can be used to determine allowable loads for pitches between 3/12 and 9/12.
3. See *Fastening Systems* catalog (C-F-2019) on **strongtie.com** for more information on Simpson Strong-Tie fasteners.



C-CF-2020 ©2020 SIMPSON STRONG-TIE COMPANY INC.

# **STC/STCT/DTC** Roof Truss Clips

For alignment control between a roof truss and nonbearing walls; the 1½" slot permits vertical truss chord movement when loads are applied.

**Material:** 43 mil (18 ga.)

**Finish:** Galvanized (G90)

**Installation:**

- Use all specified fasteners; see General Notes
- Use STC or DTC depending on required loads
- STC / STCT / DTC may be used with proprietary material sections. Contact material supplier for specific installation details
- Use STCT where truss or rafter is separated from the top plate of the nonbearing wall
- Install slot screws in the middle of the slot

**Codes:** See p. 11 for Code Reference Key Chart

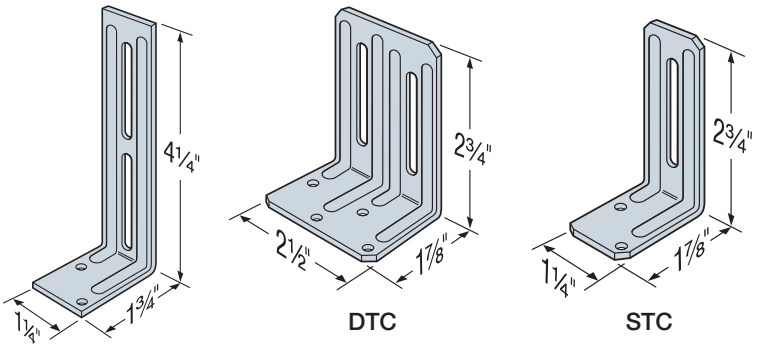


STCT DTC STC

*To allow for vertical truss movement, screws into the truss or rafter should not be driven completely flush against the connector.*

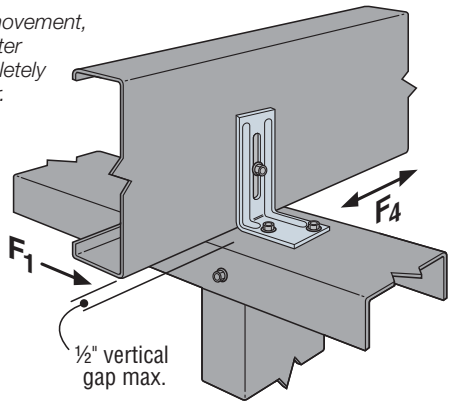


Typical STC Installation

| Model No. | Fasteners[3] | | Allowable Load 33 mil (20 ga.) (lb.) | | | | | | Code Ref. |
|---|---|---|---|---|---|---|---|---|---|
| | Base | Slot | Without Gap | | ¼" Max. Gap | | ¼"< Gap ≤ ½" | | |
| | | | $F_1$ | $F_4$ | $F_1$ | $F_4$ | $F_1$ | $F_4$ | |
| STC | (2) #8 | (1) #8 | 185 | 35 | 135 | 35 | 75 | 35 | IBC, FL, LA |
| STCT | (2) #8 | (1) #8 | — | — | — | — | — | — | — |
| DTC | (4) #8 | (2) #8 | 200 | 160 | 200 | 160 | 145 | 160 | IBC, FL, LA |

1. Truss or rafter must be bearing on top plate to achieve the allowable loads under "Without Gap."
2. Clips are required on both sides of the truss to achieve $F_1$ loads in both directions (stagger parts to avoid screw interferences).
3. See *Fastening Systems* catalog (C-F-2019) on **strongtie.com** for more information on Simpson Strong-Tie fasteners.

# **S/HTC** Heavy Truss Clips

S/HTC provides a slotted connection from the truss or joist to the top track when isolation of two members is required.

**Material:** 43 mil (18 ga.)

**Finish:** Galvanized (G90)

**Installation:**

- Use all specified fasteners
- Screws in vertical slots shall not be driven completely flush against the connector when vertical movement is desired

**Codes:** See p. 11 for Code Reference Key Chart

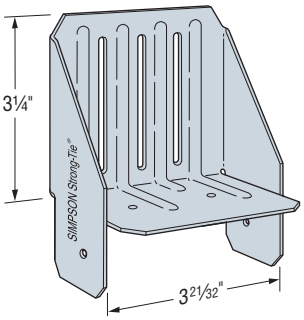


S/HTC4

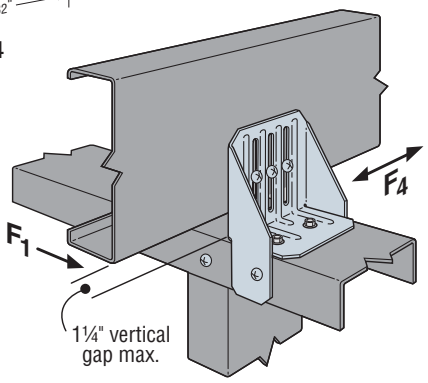


Typical S/HTC4 Installation

| Model No. | Fasteners[3] | | Allowable Load 43 mil (18 ga.) (lb.) | | | | Code Ref. |
|---|---|---|---|---|---|---|---|
| | Top Track | Truss | Without Gap[1] | | With 1¼" Gap[2] | | |
| | | | $F_1$ | $F_4$ | $F_1$ | $F_4$ | |
| S/HTC4 | (4) #8 | (3) #8 | 320 | 460 | 85 | 175 | — |

1. Truss or rafter must be bearing on top plate to achieve the allowable loads under "Without Gap."
2. Installed with maximum 1¼" space between rafter or truss and top plate under "With 1¼" Gap." Where loads are not required, space is not limited to 1¼".
3. See *Fastening Systems* catalog (C-F-2019) on **strongtie.com** for more information on Simpson Strong-Tie fasteners.



C-CF-2020 ©2020 SIMPSON STRONG-TIE COMPANY INC.

# Lateral Connectors, Ties and Straps

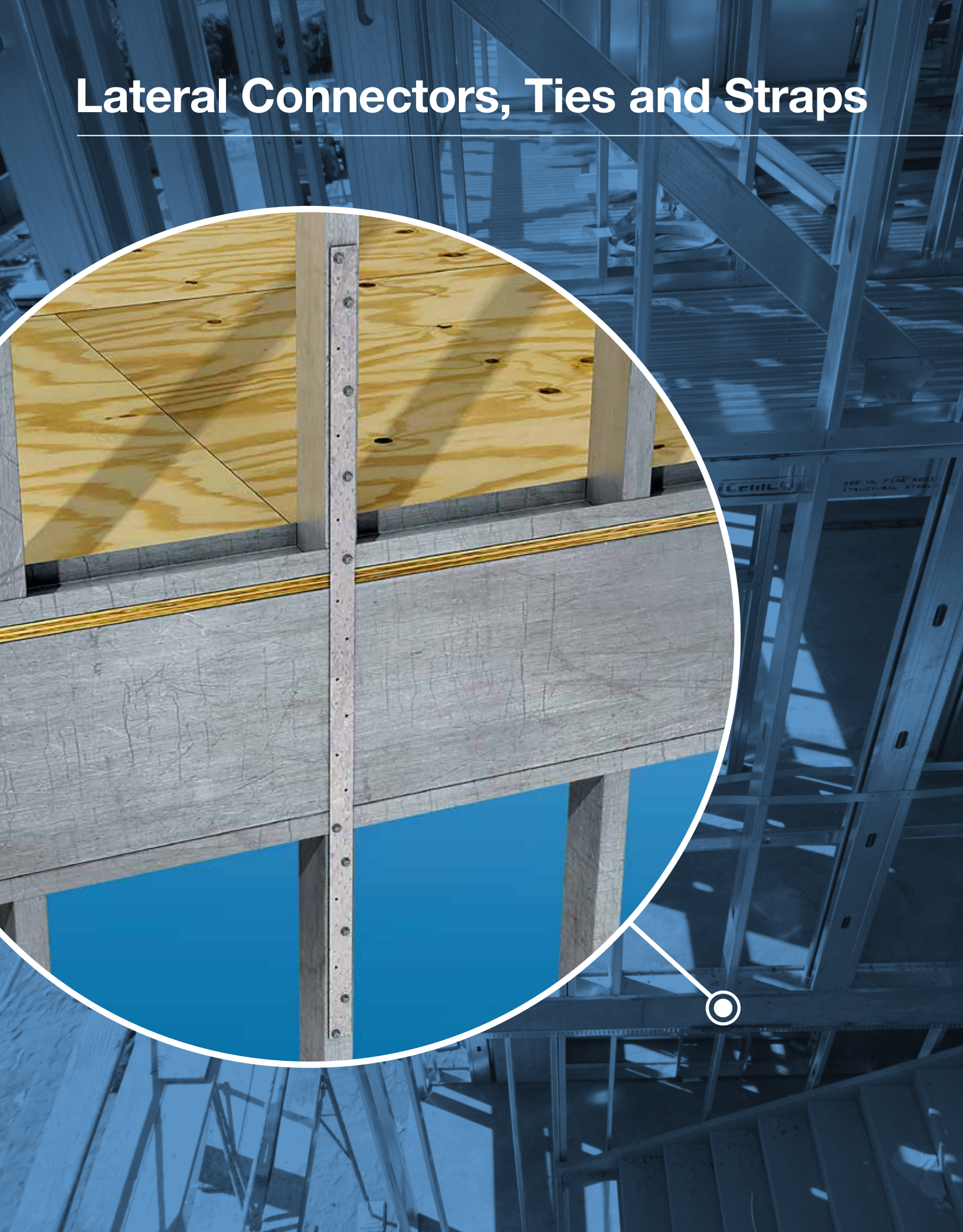

# **TSBR** Truss Spacer Restraint

The TSBR captures the on-center spacing of CFS truss chords and webs and laterally restrains the truss members, allowing quicker, easier and safer installations. The tubular shape provides strength in both compression and tension.

**Material:** 27 mil (22 ga.)

**Finish:** Galvanized

**Installation:**

- Use all specified fasteners; see General Notes

**Codes:** See p. 11 for Code Reference Key Chart

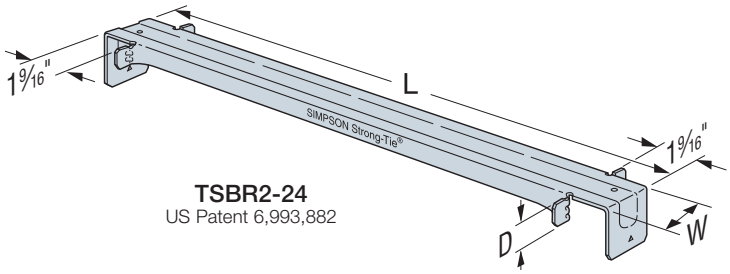


**TSBR2-24**
US Patent 6,993,882

| Model No. | Dimensions (in.) | | | | Fasteners[3] | | Allowable Load (lb.) | | Code Ref. |
|---|---|---|---|---|---|---|---|---|---|
| | W | L[2] | H | B | Bend End | Straight End | Compression 33 mil (20 ga.) | Tension 33 mil (20 ga.) | |
| TSBR2-24 | 1½ | 25½ | 1 | 1¾ | (1) #10 | (1) #10 | 455 | 215 | — |
| | | | | | (2) #10 | (2) #10 | 455 | 575 | |

1. Designer shall ensure attached members are adequately designed to resist applied loads.
2. Length, L, equals the effective out-to-out dimension of the braced trusses.
3. See *Fastening Systems* catalog (C-F-2019) on **strongtie.com** for more information on Simpson Strong-Tie fasteners.

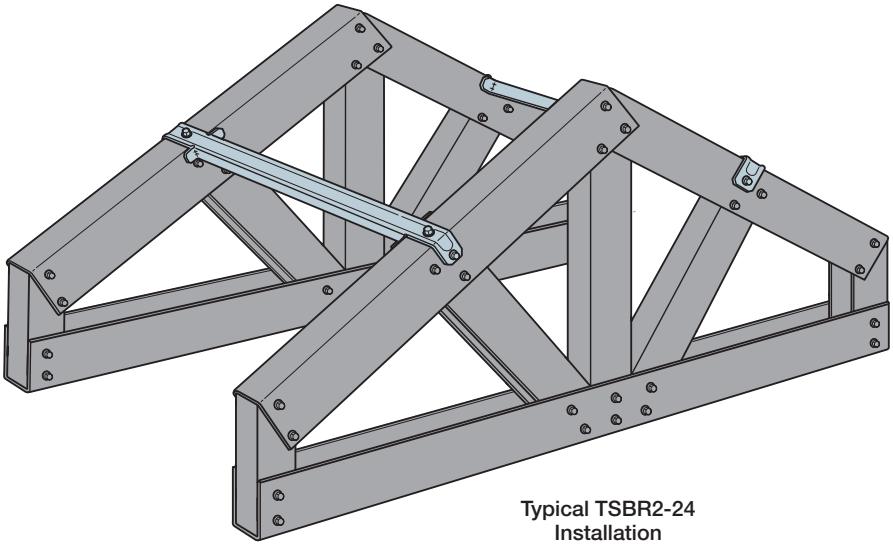

Typical TSBR2-24 Installation

C-CF-2020 ©2020 SIMPSON STRONG-TIE COMPANY INC.

# HRS/ST/FHA/PS/LSTA/LSTI/MST/MSTA/MSTC/MSTI Strap Ties

Straps are load rated and provide the correct thickness and number of fasteners the specifier is looking for compared with field fabricated straps.

Install strap ties where top or bottom plates are cut, at wall intersections, and as ridge ties. Reduce the allowable load based on the size and quantity of fasteners used.

Refer to applicable code for minimum edge and end distances.

**Finish:** PS — hot-dip galvanized (HDG); all others — galvanized. Some products are available in stainless steel or ZMAX®; see Corrosion Information, pp. 17–19.

**Installation:** Use all specified fasteners; see General Notes

**Codes:** See p. 11 for Code Reference Key Chart

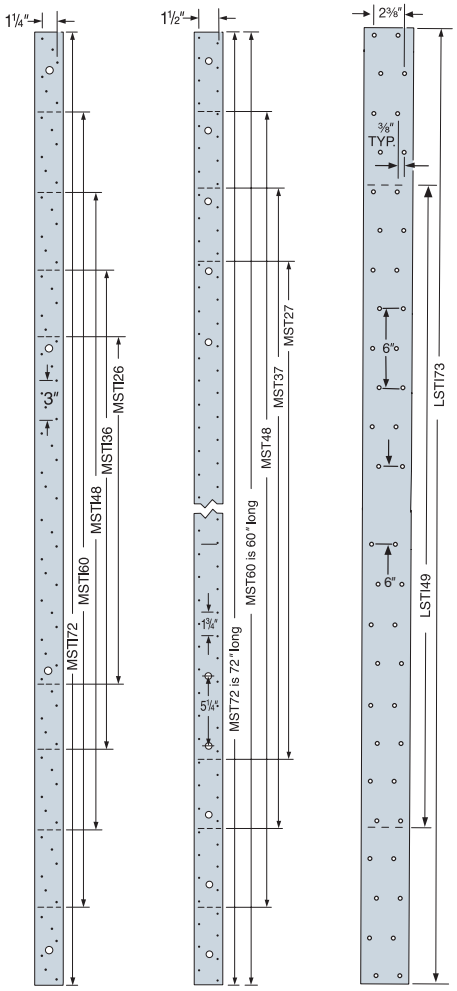


MSTI MST LSTI

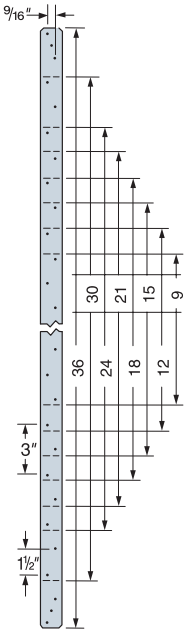


LSTA and MSTA
*(pilot holes not shown)*

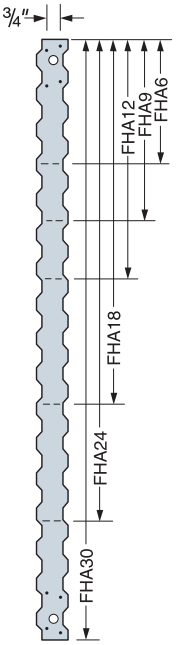


FHA

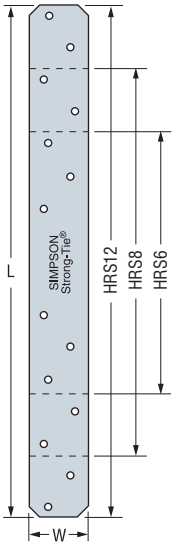


HRS

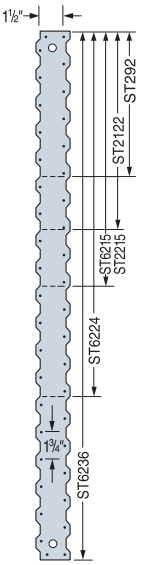


ST

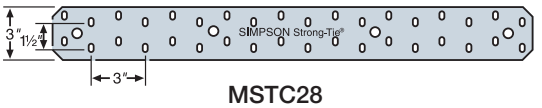


MSTC28

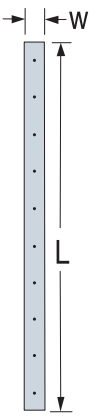


ST2115

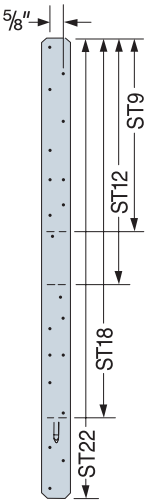


ST9, ST12, ST18, ST22

| Model No. | Connector Material Thickness mil (ga.) | Dimensions (in.) | | Bolts | | Code Ref. |
|---|---|---|---|---|---|---|
| | | W | L | Qty. | Dia. (in.) | |
| PS218 | 171 (7) | 2 | 18 | 4 | ¾ | — |
| PS418 | | 4 | 18 | 4 | ¾ | |
| PS720 | | 6¾ | 20 | 8 | ½ | |

1. PS strap design loads must be determined by the designer for each illustration. Hole diameter in the part may be oversized to accommodate the HDG. Designer must determine if the oversize creates an unacceptable installation.

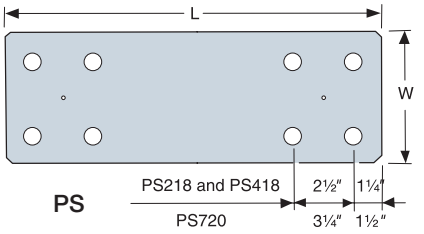


PS



C-CF-2020 ©2020 SIMPSON STRONG-TIE COMPANY INC.

# HRS/ST/FHA/PS/LSTA/LSTI/MST/MSTA/MSTC/MSTI Strap Ties

SIMPSON Strong-Tie®

**Codes:** See p. 11 for Code Reference Key Chart

| Model No. | Connector Material Thick. mil (ga.) | Dimensions (in.) | | Fasteners[4] (Total) | | | Allowable ASD Tension Load (lb.) | | | Code Ref. |
|---|---|---|---|---|---|---|---|---|---|---|
| | | | | Rafter/Stud/Joist Thickness | | | 33 mil (20 ga.) | 43 mil (18 ga.) | 54 mil (16 ga.) | |
| | | W | L | 33 mil (20 ga.) | 43 mil (18 ga.) | 54 mil (16 ga.) | | | | |
| LSTA9 | 33 (20) | 1¼ | 9 | (8) #10 | (8) #10 | (8) #10 | 705 | 1,120 | 1,190 | IBC, FL, LA |
| LSTA12 | | 1¼ | 12 | (10) #10 | (10) #10 | (8) #10 | 885 | 1,190 | 1,190 | |
| LSTA15 | | 1¼ | 15 | (12) #10 | (12) #10 | (10) #10 | 1,060 | 1,190 | 1,190 | |
| LSTA18 | | 1¼ | 18 | (14) #10 | (12) #10 | (10) #10 | 1,190 | 1,190 | 1,190 | |
| LSTA21 | | 1¼ | 21 | (14) #10 | (12) #10 | (10) #10 | 1,190 | 1,190 | 1,190 | |
| LSTA24 | | 1¼ | 24 | (14) #10 | (12) #10 | (10) #10 | 1,190 | 1,190 | 1,190 | |
| ST292 | | 2 1/16 | 9 5/16 | (12) #10 | (10) #10 | (10) #10 | 1,060 | 1,240 | 1,240 | |
| ST2122 | | 2 1/16 | 12 13/16 | (16) #10 | (12) #10 | (10) #10 | 1,415 | 1,502 | 1,502 | |
| ST2115 | | ¾ | 16 5/16 | (8) #10 | (6) #10 | (4) #10 | 630 | 630 | 630 | |
| ST2215 | | 2 1/16 | 16 5/16 | (20) #10 | (14) #10 | (10) #10 | 1,765 | 1,825 | 1,825 | |
| LSTA30 | 43 (18) | 1¼ | 30 | (18) #10 | (12) #10 | (10) #10 | 1,555 | 1,555 | 1,555 | |
| LSTA36 | | 1¼ | 36 | (18) #10 | (16) #10 | (14) #10 | 1,555 | 1,555 | 1,555 | |
| LSTI49 | | 3¾ | 49 | (32) #10 | (32) #10 | (20) #10 | 2,830 | 4,050 | 4,050 | |
| LSTI73 | | 3¾ | 73 | (46) #10 | (32) #10 | (20) #10 | 4,050 | 4,050 | 4,050 | |
| MSTA9 | | 1¼ | 9 | (8) #10 | (8) #10 | (8) #10 | 705 | 1,050 | 1,555 | |
| ■ MSTA12 | | 1¼ | 12 | (10) #10 | (10) #10 | (8) #10 | 885 | 1,315 | 1,555 | |
| ■ MSTA15 | | 1¼ | 15 | (12) #10 | (12) #10 | (10) #10 | 1,060 | 1,555 | 1,555 | |
| ■ MSTA18 | | 1¼ | 18 | (14) #10 | (12) #10 | (10) #10 | 1,235 | 1,555 | 1,555 | |
| ■ MSTA21 | | 1¼ | 21 | (16) #10 | (12) #10 | (10) #10 | 1,415 | 1,555 | 1,555 | |
| ■ MSTA24 | | 1¼ | 24 | (18) #10 | (12) #10 | (10) #10 | 1,555 | 1,555 | 1,555 | |
| ■ MSTA30 | 54 (16) | 1¼ | 30 | (22) #10 | (16) #10 | (12) #10 | 1,945 | 1,950 | 1,950 | |
| ■ MSTA36 | | 1¼ | 36 | (24) #10 | (18) #10 | (16) #10 | 1,950 | 1,950 | 1,950 | |
| ST6215 | | 2 1/16 | 16 5/16 | (20) #10 | (16) #10 | (10) #10 | 1,765 | 2,025 | 2,025 | |
| ST6224 | | 2 1/16 | 23 5/16 | (28) #10 | (20) #10 | (12) #10 | 2,455 | 2,455 | 2,455 | |
| ST9 | | 1¼ | 9 | (8) #10 | (8) #10 | (8) #10 | 705 | 1,050 | 1,350 | |
| ST12 | | 1¼ | 11⅝ | (10) #10 | (10) #10 | (8) #10 | 885 | 1,315 | 1,350 | |
| ST18 | | 1¼ | 17¾ | (14) #10 | (12) #10 | (12) #10 | 1,235 | 1,350 | 1,350 | |
| ST22 | | 1¼ | 21⅝ | (20) #10 | (20) #10 | (20) #10 | 1,350 | 1,350 | 1,350 | |
| MSTC28 | | 3 | 28¼ | (36) #10 | (36) #10 | (30) #10 | 3,180 | 4,600 | 4,600 | |
| MSTC40 | | 3 | 40¼ | (52) #10 | (46) #10 | (46) #10 | 4,595 | 4,600 | 4,600 | |
| MSTC52 | | 3 | 52¼ | (54) #10 | (42) #10 | (42) #10 | 4,600 | 4,600 | 4,600 | |
| MSTC66 | 68 (14) | 3 | 65¾ | (66) #10 | (46) #10 | (30) #10 | 5,795 | 5,795 | 5,795 | |
| MSTC78 | | 3 | 77¾ | (66) #10 | (46) #10 | (30) #10 | 5,795 | 5,795 | 5,795 | |
| ST6236 | | 2 1/16 | 33 13/16 | (40) #10 | (30) #10 | (18) #10 | 3,535 | 3,760 | 3,760 | |
| HRS6 | 97 (12) | 1⅜ | 6 | (6) #10 | (6) #10 | (6) #10 | 530 | 790 | 1,600 | |
| HRS8 | | 1⅜ | 8 | (10) #10 | (10) #10 | (10) #10 | 885 | 1,315 | 2,670 | |
| HRS12 | | 1⅜ | 12 | (14) #10 | (14) #10 | (12) #10 | 1,235 | 1,840 | 2,710 | |
| FHA12 | | 1 7/16 | 11⅝ | (8) #10 | (8) #10 | (8) #10 | 705 | 1,050 | 2,045 | |
| FHA18 | | 1 7/16 | 17¾ | (8) #10 | (8) #10 | (8) #10 | 705 | 1,050 | 2,045 | |
| MSTI26 | | 2 1/16 | 26 | (26) #10 | (26) #10 | (22) #10 | 2,300 | 3,420 | 5,025 | |
| MSTI36 | | 2 1/16 | 36 | (36) #10 | (36) #10 | (22) #10 | 3,180 | 4,735 | 5,025 | |
| MSTI48 | | 2 1/16 | 48 | (48) #10 | (40) #10 | (22) #10 | 4,240 | 5,025 | 5,025 | |
| MSTI60 | | 2 1/16 | 60 | (58) #10 | (40) #10 | (22) #10 | 5,025 | 5,025 | 5,025 | |
| MST27 | | 2 1/16 | 27 | (30) #10 | (30) #10 | (22) #10 | 2,650 | 3,945 | 5,025 | — |
| MST37 | | 2 1/16 | 37 | (42) #10 | (40) #10 | (34) #10 | 3,710 | 5,025 | 5,025 | |
| MST48 | | 2 1/16 | 48 | (54) #10 | (54) #10 | (46) #10 | 4,770 | 5,155 | 5,155 | |
| MST60 | 118 (10) | 2 1/16 | 60 | (68) #10 | (68) #10 | (62) #10 | 5,820 | 6,420 | 6,650 | |
| MST72 | | 2 1/16 | 72 | (80) #10 | (72) #10 | (64) #10 | 6,650 | 6,650 | 6,650 | |

■ These products are available with additional corrosion protection. Additional products on this page may also be available with this option. Check with Simpson Strong-Tie for details.

1. Use half of the fasteners in each member being connected to achieve the listed loads.
2. Loads are based on lesser of steel capacity or fastener calculation.
3. Not all fastener holes need to be filled, as additional fastener holes are provided. Install fasteners symmetrically.
4. See *Fastening Systems* catalog (C-F-2019) on **strongtie.com** for more information on Simpson Strong-Tie fasteners.

C-CF-2020 ©2020 SIMPSON STRONG-TIE COMPANY INC.

# **CS/CMST** Coiled Straps

CMSTC provides countersunk fastener slots that provide a lower screw head profile. CS, CMST and CMSTC are continuous utility straps which can be cut to length on the job site. Packaged in lightweight cartons (about 40 lb.).

**Finish:** Galvanized. Some products available in ZMAX® coating; see Corrosion Information, pp. 17–19.

**Installation:**

- Use all specified fasteners; see General Notes.
- Refer to the applicable code for minimum edge and end distances.
- The table shows the maximum allowable loads and the screws required to obtain them. See footnote #1. Fewer screws may be used; reduce the allowable load by the code lateral load for each fastener subtracted from each end.

**Codes:** See p. 11 for Code Reference Key Chart

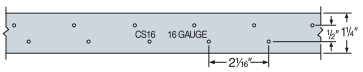


**CS16 Hole Pattern**
*(all other CS straps similar)*

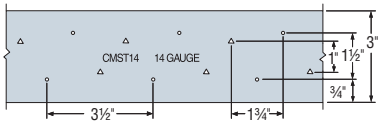


**CMST14 Hole Pattern**
*(CMST12 similar)*

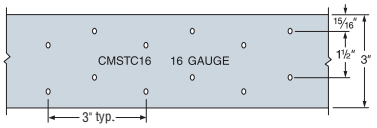


**CMSTC16 Hole Pattern**

*Gauge stamped on part for easy identification.*

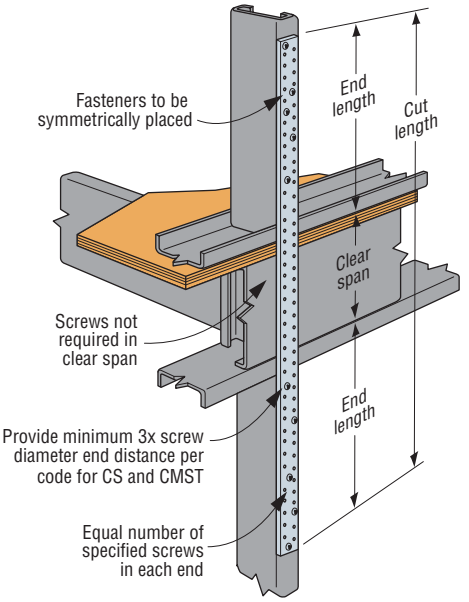


**Typical CS Installation as a Floor-to-Floor Tie**

| Model No. | Total Length | Connector Material Thickness mil (ga.) | Width (in.) | Fasteners[8] (Total) Rafter/Stud/Joist Thickness 33 mil (20 ga.) | 43 mil (18 ga.) | 54 mil (16 ga.) | Allowable Tension Load (lb.) 33 mil (20 ga.) 43 mil (18 ga.) 54 mil (16 ga.) | Code Ref. |
|---|---|---|---|---|---|---|---|---|
| CMST12[2] | 40'–3" | 97 (12) | 3 | (104) #10 | (70) #10 | (40) #10 | 9,080 | IBC, FL, LA |
| CMST14[2] | 52'–6" | 68 (14) | 3 | (72) #10 | (50) #10 | (28) #10 | 6,365 | |
| CMSTC16[3] | 54' | 54 (16) | 3 | (54) #10 | (36) #10 | (30) #10 | 4,600 | |
| CS14 | 100' | 68 (14) | 1¼ | (28) #10 | (18) #10 | (12) #10 | 2,305 | |
| CS16 | 150' | 54 (16) | 1¼ | (18) #10 | (12) #10 | (8) #10 | 1,550 | |
| CS20 | 250' | 33 (20) | 1¼ | (12) #10 | (8) #10 | (6) #10 | 945 | |

These products are available with additional corrosion protection. Additional products on this page may also be available with this option. Check with Simpson Strong-Tie for details.

1. Use half of the fasteners in each member being connected to achieve the listed loads.
2. For CMST straps: End Length (inches) = ½ total fasteners x ⅞" + 1" when all holes filled. Double length if only round holes filled.
3. For CMSTC16 straps: End Length (inches) = ½ total fasteners x ¾" + 1" when all holes filled. Double length if only round holes filled.
4. For CS straps: End Length (inches) = ½ total fasteners + 1".
5. Total Cut Length = End Length + Clear Span + End Length.
6. Calculate the connector value for a reduced number of screws as follows: Allowable Load = $\frac{\text{No. of Screws Used}}{\text{No. of Screws in Table}}$ x Table Load

   Example: CMSTC16 on 54 mil with 24 screws: $\frac{\text{24 Screws (Used)}}{\text{30 Screws (Table)}}$ x 4,600 lb. = 3,680 lb.
7. Loads are based on lesser of steel strap capacity and AISI S100 fastener calculation.
8. See *Fastening Systems* catalog (C-F-2019) on **strongtie.com** for more information on Simpson Strong-Tie fasteners.



C-CF-2020 ©2020 SIMPSON STRONG-TIE COMPANY INC.

# **LTP5** Framing Anchor

The LTP5 framing anchor spans subfloor at the top of the blocking or rim joist. The embossments enhance performance and allow for design flexibility.

**Material:** 33 mil (20 ga.)

**Finish:** Galvanized

**Installation:**

- Use all specified fasteners; see General Notes

**Codes:** See p. 11 for Code Reference Key Chart

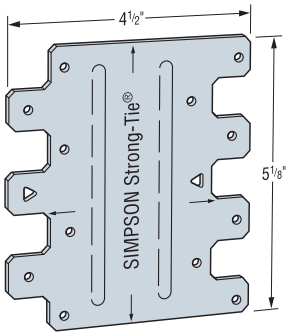


LTP5

| Model No. | Type of Connection | Direction of Load | Fasteners[4] | | Allowable Load 43 mil (18 ga.) (lb.) | Code Ref. |
|---|---|---|---|---|---|---|
| | | | To Rim Joist | To Sheathing and Track | | |
| LTP5 | 1 | G | (7) #10 | (7) #10 | 1,045 | IBC, FL, LA |
| | 2 | | (7) #10 | (7) #10 | 1,110 | |
| | 3 | | (7) 8d x 1½" | (7) #10 | 730 | |

1. Allowable loads are for one anchor.
2. Allowable loads are based on steel (stud and sheet) of 43 mil (18 ga.) minimum.
3. Allowable load for Type 3 connection assumes $C_D$ = 1.60.
4. See *Fastening Systems* catalog (C-F-2019) on **strongtie.com** for more information on Simpson Strong-Tie fasteners.

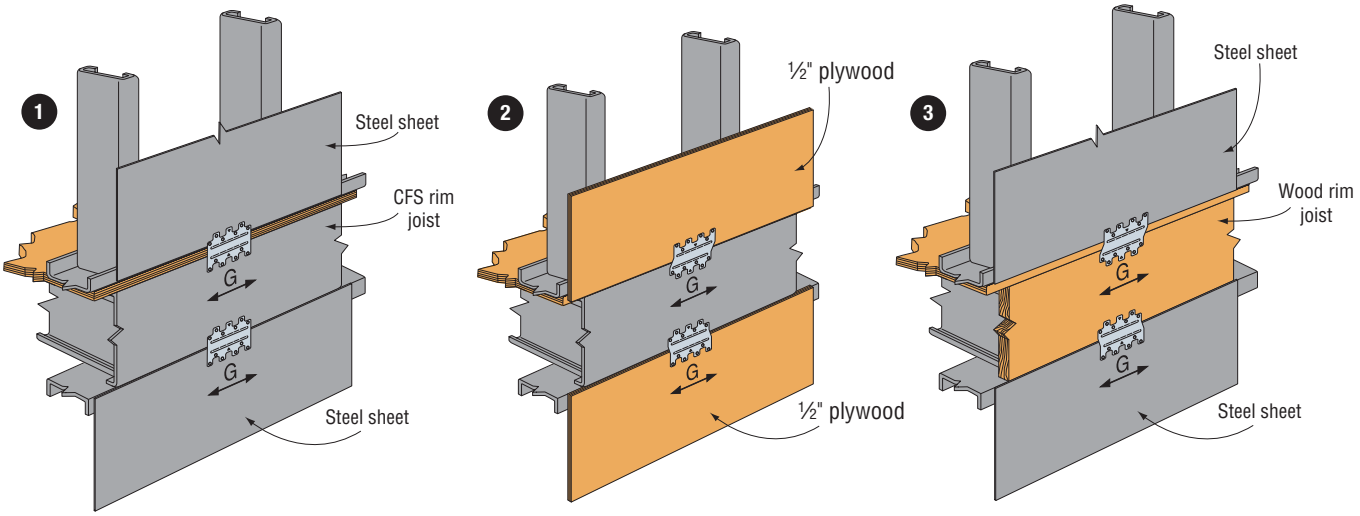


**Note:** When attaching an LTP5 framing anchor over sheathing, the screws must penetrate and engage the steel framing. A minimum of three threads shall penetrate past the steel.

C-CF-2020 ©2020 SIMPSON STRONG-TIE COMPANY INC.

# Lateral Systems

# **Steel Strong-Wall®** Shearwalls

## Features and Benefits:

**Code Listed**
New ICC-ES ESR-1679 code report evaluated to the 2015 IRC/IBC

**Less Labor = Increased Production**
Fewer anchor bolts and fasteners coupled with easy access to the top and bottom of the wall result in more efficient installation

**Easier for All Trades**
An easy-to-use anchor-bolt template for concrete contractors, available pre-attached CFS studs and predrilled holes where electricians need them for wiring

**Support and Service**
Simpson Strong-Tie provides the best engineering technical support and experienced field representation available

**Codes:** ICC-ES ESR-1679; City of L.A. RR25625; State of Florida FL5113

Please visit **strongtie.com/products/lateral-systems** for load tables, structural details and anchorage information.

Also refer to the General Notes on pp. 6–8 in the *Strong-Wall® Shearwalls* catalog (C-L-SW17) for Important Information and General Notes.

# Strong-Wall Shearwall Selector Application

This application helps design professionals select an appropriate Simpson Strong-Tie Steel Strong-Wall, Strong-Wall wood shearwall or original wood Strong-Wall system.

### Optimized Solution

Provides the most cost-effective Strong-Wall solution based on the input shear load.

### Manual Solution

Allows designers to choose which type and number of walls meet their requirements.

- Finds lowest cost solution
- Provides actual drift and uplift values
- Provides solutions for different model Codes
- Includes new anchorage solutions
- Saves, exports and prints solutions

You can find the Strong-Wall Shearwall Selector application at **strongtie.com/webapps/strongwallshearwallselector**.

C-CF-2020 ©2020 SIMPSON STRONG-TIE COMPANY INC.

# **Strong-Frame®** Special Moment Frames

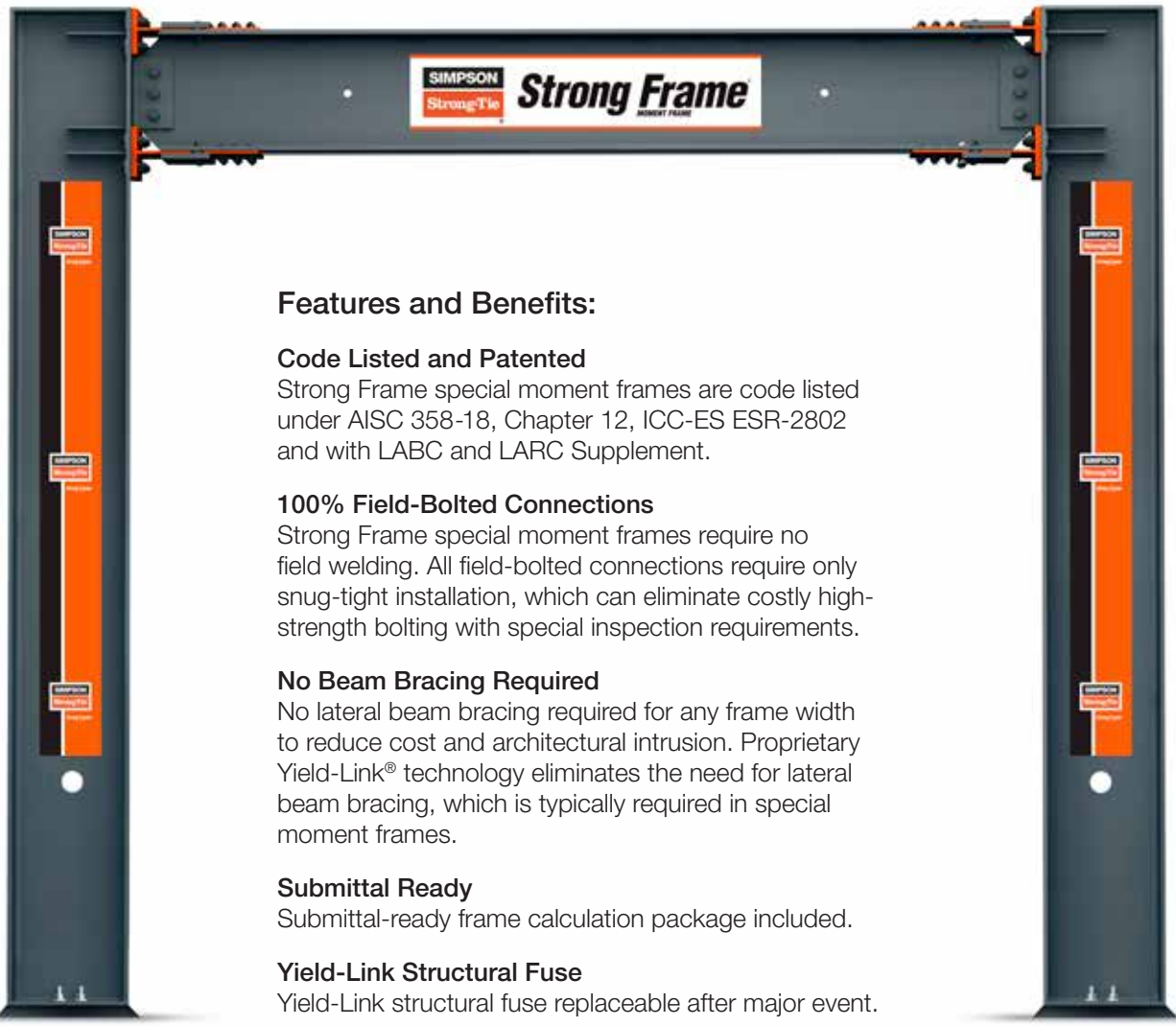


## Features and Benefits:

**Code Listed and Patented**
Strong Frame special moment frames are code listed under AISC 358-18, Chapter 12, ICC-ES ESR-2802 and with LABC and LARC Supplement.

**100% Field-Bolted Connections**
Strong Frame special moment frames require no field welding. All field-bolted connections require only snug-tight installation, which can eliminate costly high-strength bolting with special inspection requirements.

**No Beam Bracing Required**
No lateral beam bracing required for any frame width to reduce cost and architectural intrusion. Proprietary Yield-Link® technology eliminates the need for lateral beam bracing, which is typically required in special moment frames.

**Submittal Ready**
Submittal-ready frame calculation package included.

**Yield-Link Structural Fuse**
Yield-Link structural fuse replaceable after major event.

**Preinstalled CFS Nailer**
Preinstalled CFS nailer attached for frames supplied by Simpson Strong-Tie.

**Support and Service**
Frame design service included. Field support for Strong Frame installations and questions.

---

**Codes:** ICC-ES ESR-2802, AISC 358-18 Chapter 12

---

Please visit **strongtie.com/products/lateral-systems** for structural details and anchorage information.

Refer to flier F-L-SF for additional information.

C-CF-2020 ©2020 SIMPSON STRONG-TIE COMPANY INC.

# Strong Frame Moment Frame Selector Software

The Simpson Strong-Tie® Strong Frame moment frame selector software is designed to help designers select an ordinary or special moment frame for their project's given geometry and loading. Only minimal geometry inputs are required for the software to select an appropriate frame for the available space. Based on input geometry, the selector software will design and narrow down the available standard frames to a handful of possible solutions. If opening dimensions are outside our range of standard frame sizes, designers can enter the specific opening dimensions, and the software will provide a list of customized solutions.

Designers can also input load and geometries for multi-bay and multi-story frames and email to Simpson Strong-Tie for design assistance.

C-CF-2020 ©2020 SIMPSON STRONG-TIE COMPANY INC.

# Miscellaneous

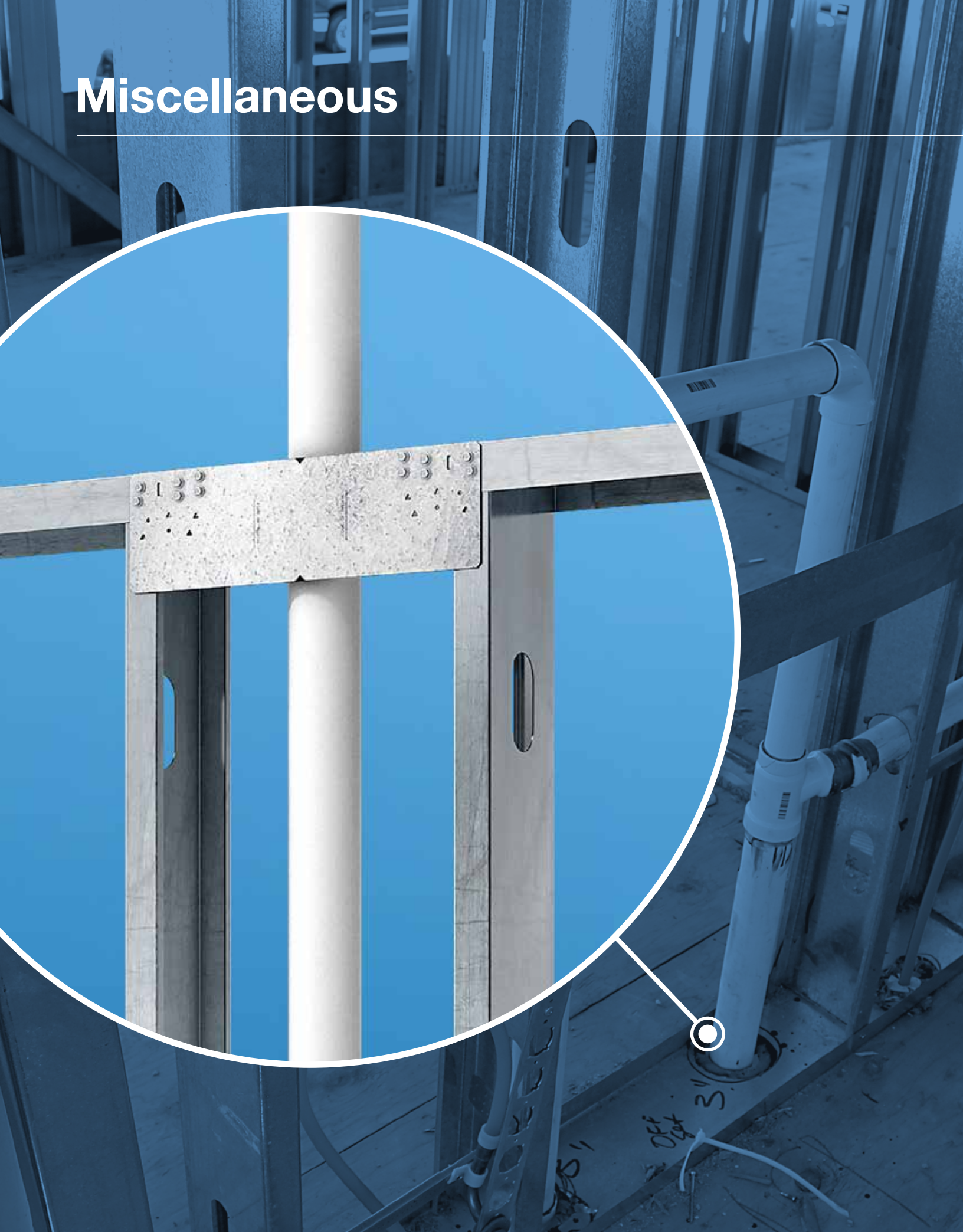

# **PSPNZ** Protecting Shield Plate

PSPN58Z and PSPN516Z protecting shield plate fastener stoppers meet IRC, IBC and the International Plumbing Code. PSPN516Z meets the code plumbing protection requirements as well as having additional fasteners if the designer chooses to use it as a track splice strap.

**Material:** 54 mil (16 ga.)

**Finish:** ZMAX® coating

**Installation:**

- Flatten prongs with hammer as needed
- Use #10 screws

**Codes:** See p. 11 for Code Reference Key Chart

PSPN516Z at top plates

- International Residential Code® — 2015/2018 P2603.2.1
- International Plumbing Code — 2015/2018 305.6

PSPN516Z at bottom plate.

- International Plumbing Code — 2015/2018 305.6

PSPN58Z at top plates and bottom plate.

- International Plumbing Code — 2015/2018 305.6

Note that the IBC section 2308.5.8 (2018 IBC) and 2308.5.7 (2015 IBC) and the IRC section R602.6.1 require a 54 mil (16 ga.) strap with (6)16d nails and (8)16d nails respectively each side at a hole or notch in a wood top, sill or sole plate. The designer or local building jurisdiction may permit an equivalent fastener strength (e.g., screws in lieu of nails) to be used for the same condition in a CFS top or bottom track.

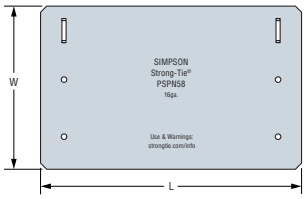


**PSPN58Z**

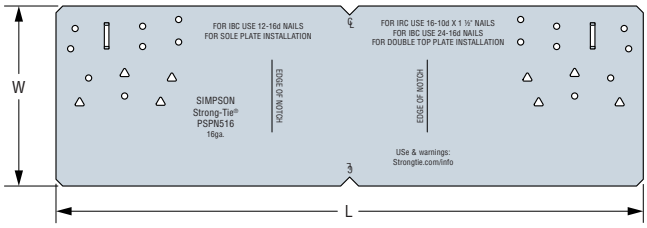


**PSPN516Z**

| Model No. | W (in.) | L (in.) | Code Ref. |
|---|---|---|---|
| PSPN58Z | 5 | 8 | — |
| PSPN516Z | 5 | 16 5/16 | |

1. #10 self-tapping screws may be used to attach PSPNZ to CFS framing with quantity determined by designer.
2. PSPN516Z with (6) #10 self-tapping screws each side achieves an allowable shear capacity of 1,060 lb. and 1,580 lb. to 33 mil (20 ga.) track and to 43 mil (18 ga.) track, respectively.

For more information, see pp. 17–19.

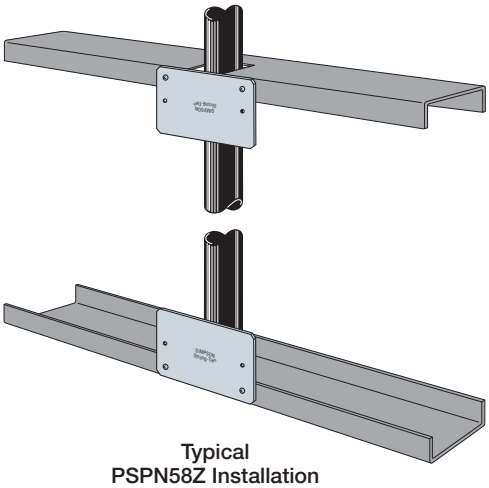

Typical
PSPN58Z Installation

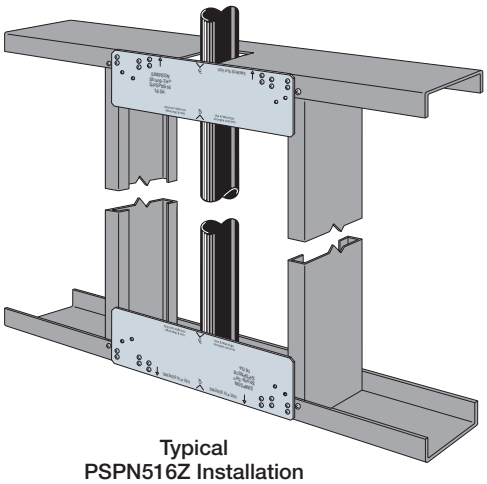

Typical
PSPN516Z Installation

C-CF-2020 ©2020 SIMPSON STRONG-TIE COMPANY INC.

## A complete line of CFS solutions designed to optimize any CFS design.

We offer a comprehensive line of products and systems that are load rated for superior strength and performance. And they're proven with extensive assembly testing both in the lab and in the field. Not to mention value engineered for easy, efficient installation. Along with our unsurpassed product range, we also offer state-of-the-art software to streamline accurate member-connector analysis and design according to precise AISI specifications. Whether you need products or design, solving your structural problems is our passion.

# Engineered Versatility

C-CF-2020 Effective 1/1/2020 Expires 12/31/2022
© 2020 Simpson Strong-Tie Company Inc.