Fastening Systems Technical Guide

C-F-2019TECHSUP | (800) 999-5099 | strongtie.com

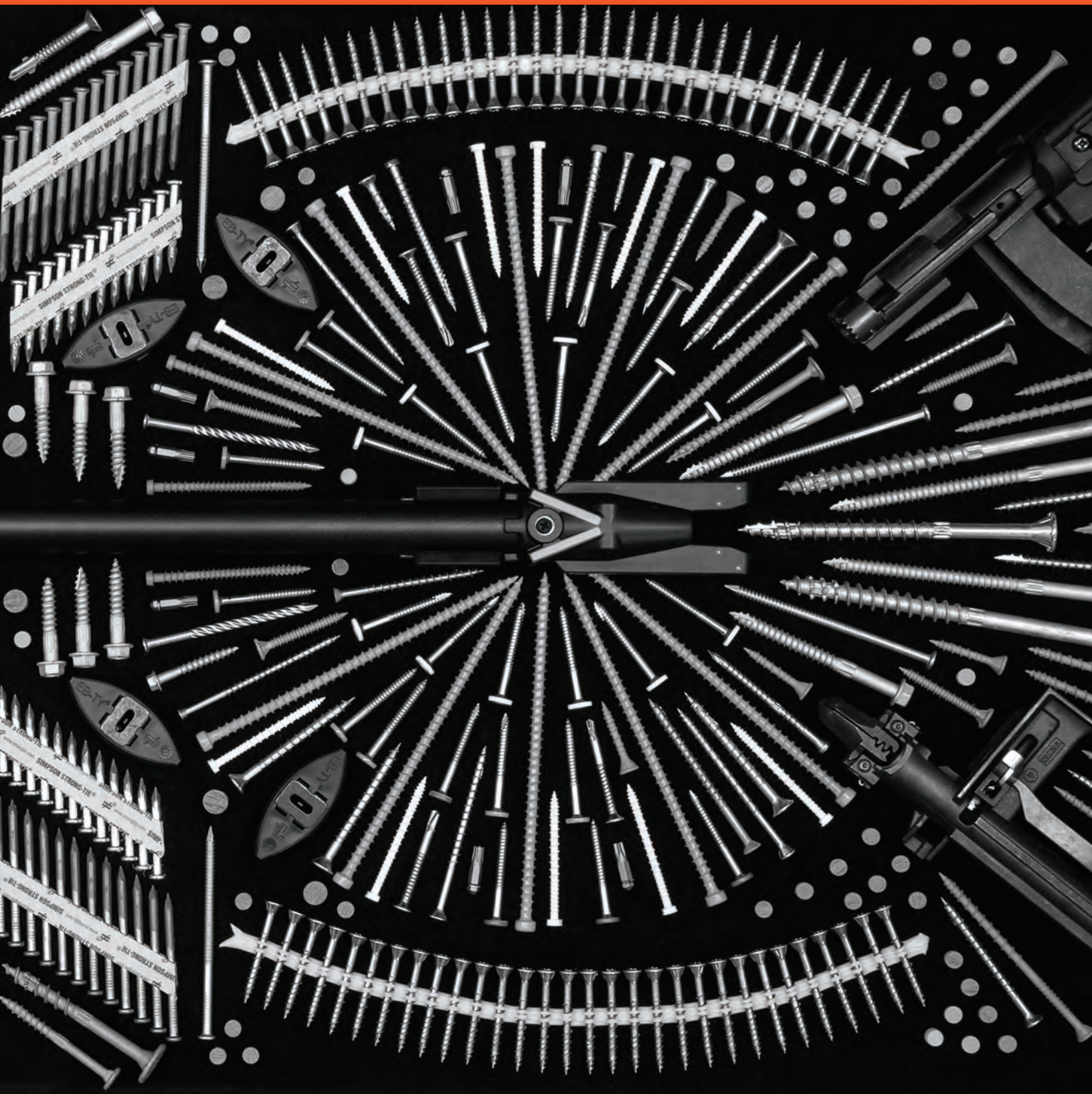

Fasteners engineered with engineers in mind.

Our No-Equal® fasteners make engineers' jobs easier. Their high-performance design increases your allowable loads while speeding installation — lowering labor and materials costs. You can spec screws and nails easily through our web apps, and quickly get the products you need from our nationwide network of suppliers.

Quality. Speed. Strength. Availability.
Work smarter with Simpson Strong-Tie® fasteners.

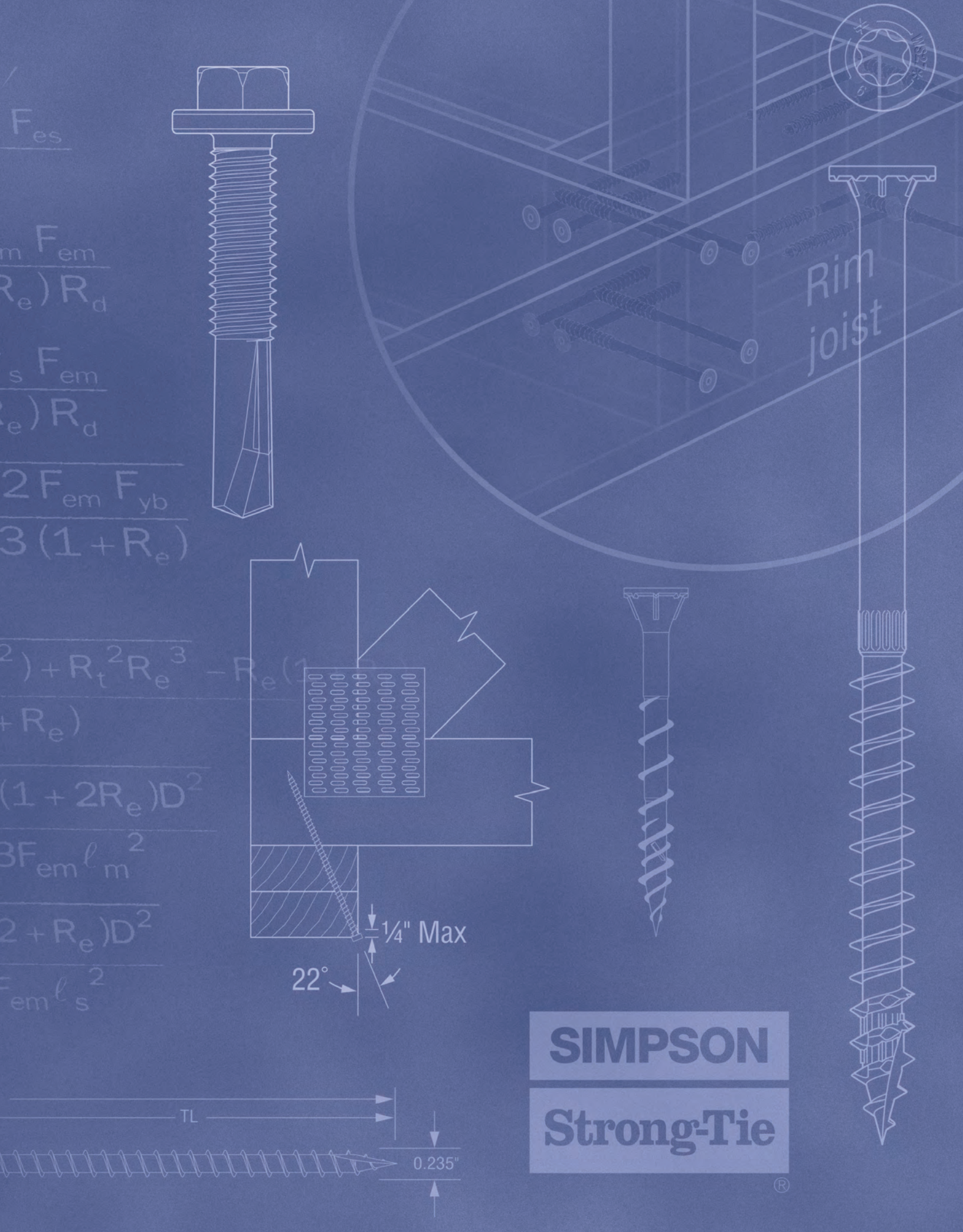

SIMPSON Strong-Tie®

Table of Contents

General Information

Important Information — Warnings and Warranties . . . 8
General Notes . . . 9
Understanding the Corrosion Issue . . . 11
Corrosion Conditions . . . 11
Guidelines for Selecting Materials and Coatings . . . 12
Corrosion Resistance Classifications . . . 14
General Material Safety Data Note . . . 16
General Load Tables . . . 17

Wood and Engineered-Wood Fastening

Structural and General Fastening

Strong-Drive® SDWS TIMBER Screw . . . 22
Strong-Drive® SDWS FRAMING Screw . . . 26
Strong-Drive® DWP WOOD SS Screw . . . 30
Strong-Drive® SDWS TIMBER SS Screw . . . 32
Strong-Drive® SDWS LOG Screw . . . 33
Strong-Drive® SDWH TIMBER-HEX Screw . . . 36
Strong-Drive® SDWH TIMBER-HEX HDG Screw . . . 40
Strong-Drive® SDWH TIMBER-HEX SS Screw . . . 42
Strong-Drive® SD CONNECTOR Screw . . . 43
Strong-Drive® SDS HEAVY-DUTY CONNECTOR Screw . . . 44

Ledger Structural Fastening Applications

Strong-Drive® SDWS TIMBER Screw . . . 45
Strong-Drive® SDWH TIMBER-HEX Screw . . . 48
Strong-Drive® SDS HEAVY-DUTY CONNECTOR Screw . . . 51

Exterior Foam-to-Wood Fastening

Strong-Drive® SDWS TIMBER Screw . . . 52

Rafter/Truss/Plate Fastening

Strong-Drive® SDWC TRUSS Screw . . . 54
Quik Stik™ Rafter and Truss Fastening System . . . 69

Sole/Top Plate-to-Rim Fastening

Strong-Drive® SDWC TRUSS Screw . . . 73
Strong-Drive® SDWV SOLE-TO-RIM Screw . . . 74
Strong-Drive® SDWS TIMBER Screw . . . 75
Strong-Drive® SDWH TIMBER-HEX Screw . . . 76
Strong-Drive® SDWS TIMBER Screw and SDWH TIMBER-HEX Screw . . . 77
Strong-Drive® SDS HEAVY-DUTY CONNECTOR Screw . . . 79

Floor-to-Floor Fastening

Strong-Drive® SDWF FLOOR-TO-FLOOR Screw . . . 80
Strong-Drive® SDWS LOG and SDWH TIMBER-HEX HDG Screw . . . 84

Subfloor and Sheathing Fastening

Strong-Drive® WSV SUBFLOOR Screw . . . 86
Strong-Drive® WSNTL SUBFLOOR Screw . . . 88

Multi-Ply Fastening

Strong-Drive® SDW TRUSS-PLY and EWP-PLY Screws . . . 90
Strong-Drive® WSV SUBFLOOR Screw . . . 98

Mass Timber/CLT Fastening

Structural Screw Applications . . . 99

Deck Applications

Fastening for Decks

Deck-Drive™ DWP WOOD SS Screw . . . 104
Deck-Drive™ DCU COMPOSITE Screw . . . 105

Deck Construction — Ledgers

Strong-Drive® SDWS TIMBER Screw . . . 106
Strong-Drive® SDWS TIMBER SS Screw . . . 107
Strong-Drive® SDWH TIMBER-HEX Screw . . . 108
Strong-Drive® SDWH TIMBER-HEX and SDWS TIMBER Screw 109
Strong-Drive® SDWH TIMBER-HEX HDG Screw . . . 111
Strong-Drive® SDWH TIMBER-HEX SS Screw . . . 112
Strong-Drive® SDS HEAVY-DUTY CONNECTOR Screw . . . 114

Deck Construction — Guard Posts

Strong-Drive® SDWS TIMBER Screw . . . 115

Deck Construction — Guard Rails

Strong-Drive® SDWS FRAMING Screw . . . 119

Deck Construction — Wood Balusters

Fasteners for Wood Balluster Installations . . . 121

Deck Construction — Beam-to-Post

Strong-Drive® SDWH TIMBER-HEX HDG Screw . . . 123

Metal-to-Wood and Connector Fastening

Connector Fastening

Fastener Types for Connectors . . . 126

Connector/Steel-to-Wood Fastening

Strong-Drive® SDS HEAVY-DUTY CONNECTOR Screw . . . 129
Wafer-Head Screw . . . 130
Strong-Drive® SD CONNECTOR Screw . . . 130
Approved Connectors for SD CONNECTOR Screw . . . 131
Strong-Drive® SCN SMOOTH-SHANK CONNECTOR Nail . . . 134
Strong-Drive® SCNR RING-SHANK CONNECTOR Nail . . . 135
OUTDOOR ACCENTS® Structural Wood Screw . . . 136
OUTDOOR ACCENTS® Connector Screw . . . 137

Nonmetal-to-Metal Fastening

Wood-to-Steel Fastening

Strong-Drive® TB WOOD-TO-STEEL Screw . . . 140

Sheathing-to-Steel Fastening

Strong-Drive® PPSD SHEATHING-TO-CFS Screw . . . 141
CBSDQ SHEATHING-TO-CFS Screw . . . 143

CFS Systems

PPSD/CBSDQ/FHSD/WSFLRV Screws . . . 146
DWF/DWFSD Screws . . . 148
PHSD/FPHSD Screws . . . 149

General Metal-to-Metal Fastening

CFS Connections

PC Screws . . . 152
Strong-Drive® PHSD FRAMING-TO-CFS Screw . . . 153
Strong-Drive® FPHSD FRAMING-TO-CFS Screw . . . 153
Strong-Drive® XE EXTERIOR STRUCTURAL METAL Screw . . . 154
Strong-Drive® SELF-DRILLING X METAL Screw . . . 155
Self-Drilling E Metal Screw . . . 157

Steel Deck

Steel-Deck Fastening . . . 158
Steel-Deck Diaphragm Calculator . . . 159
Strong-Drive® XL LARGE-HEAD and XM MEDIUM-HEAD METAL Screws . . . 160

C-F-2019TECHSUP ©2019 SIMPSON STRONG-TIE COMPANY INC.

Alphabetical Index

C

CBSDQ SHEATHING-TO-CFS Screw 143
Corrosion Conditions 11
Corrosion Resistance Classifications 14

D

Deck-Drive™ DCU COMPOSITE Screw 105
Deck-Drive™ DWP WOOD SS Screw 104
DWF/DWFSD Screws 148

F

Fasteners for Wood Balluster Installations 121
Fastener Types for Connectors 126

G

General Load Tables 17
General Material Safety Data Note 16
General Notes 9
Guidelines for Selecting Materials and Coatings 12

I

Important Information — Warnings and Warranties 8

O

OUTDOOR ACCENTS® Connector Screw 137
OUTDOOR ACCENTS® Structural Wood Screw 136

P

PC Screws 152
PHSD/FPHSD Screws 149
PPSD/CBSDQ/FHSD/WSFLRV Screws 146

Q

Quik Stik™ Rafter and Truss Fastening System 69

S

Self-Drilling E Metal Screw 157
Steel-Deck Diaphragm Calculator 159
Steel-Deck Fastening 158
Strong-Drive® DWP WOOD SS Screw 30
Strong-Drive® FPHSD FRAMING-TO-CFS Screw 153
Strong-Drive® PHSD FRAMING-TO-CFS Screw 153
Strong-Drive® PPSD SHEATHING-TO-CFS Screw 141
Strong-Drive® SCNR RING-SHANK CONNECTOR Nail 135
Strong-Drive® SCN SMOOTH-SHANK CONNECTOR Nail 134
Strong-Drive® SD CONNECTOR Screw 43, 130, 131
Strong-Drive® SDS HEAVY-DUTY
CONNECTOR Screw 44, 51, 79, 114, 129
Strong-Drive® SDWC TRUSS Screw 54, 73
Strong-Drive® SDWF FLOOR-TO-FLOOR Screw 80
Strong-Drive® SDWH TIMBER-HEX and
SDWS TIMBER Screw 109
Strong-Drive® SDWH TIMBER-HEX HDG Screw 40, 111, 123
Strong-Drive® SDWH TIMBER-HEX Screw 36, 48, 76, 108
Strong-Drive® SDWH TIMBER-HEX SS Screw 42, 112
Strong-Drive® SDWS FRAMING Screw 26, 119
Strong-Drive® SDWS LOG and
SDWH TIMBER-HEX HDG Screw 84
Strong-Drive® SDWS LOG Screw 33
Strong-Drive® SDWS TIMBER Screw 22, 45, 52, 75, 106, 115
Strong-Drive® SDWS TIMBER Screw and
SDWH TIMBER-HEX Screw 77
Strong-Drive® SDWS TIMBER SS Screw 32, 107
Strong-Drive® SDW TRUSS-PLY and EWP-PLY Screws 90
Strong-Drive® SDWV SOLE-TO-RIM Screw 74
Strong-Drive® SELF-DRILLING X METAL Screw 155
Strong-Drive® TB WOOD-TO-STEEL Screw 140
Strong-Drive® WSNTL SUBFLOOR Screw 88
Strong-Drive® WSV SUBFLOOR Screw 86, 98
Strong-Drive® XE EXTERIOR STRUCTURAL METAL Screw . . . 154
Strong-Drive® XL LARGE-HEAD and
XM MEDIUM-HEAD METAL Screws 160
Structural Screw Applications 99

U

Understanding the Corrosion Issue 11

W

Wafer-Head Screw 130

C-F-2019TECHSUP ©2019 SIMPSON STRONG-TIE COMPANY INC.

Company Information

For more than 60 years, Simpson Strong-Tie® has focused on creating structural products that help people design and build safer, stronger structures. A leader in structural systems research and technology, Simpson Strong-Tie is one of the largest suppliers of structural building products in the world. Our commitment to product development, engineering, testing and training is evident in the consistent quality and delivery of our products and services.

For more information, visit the company's website at **strongtie.com**.

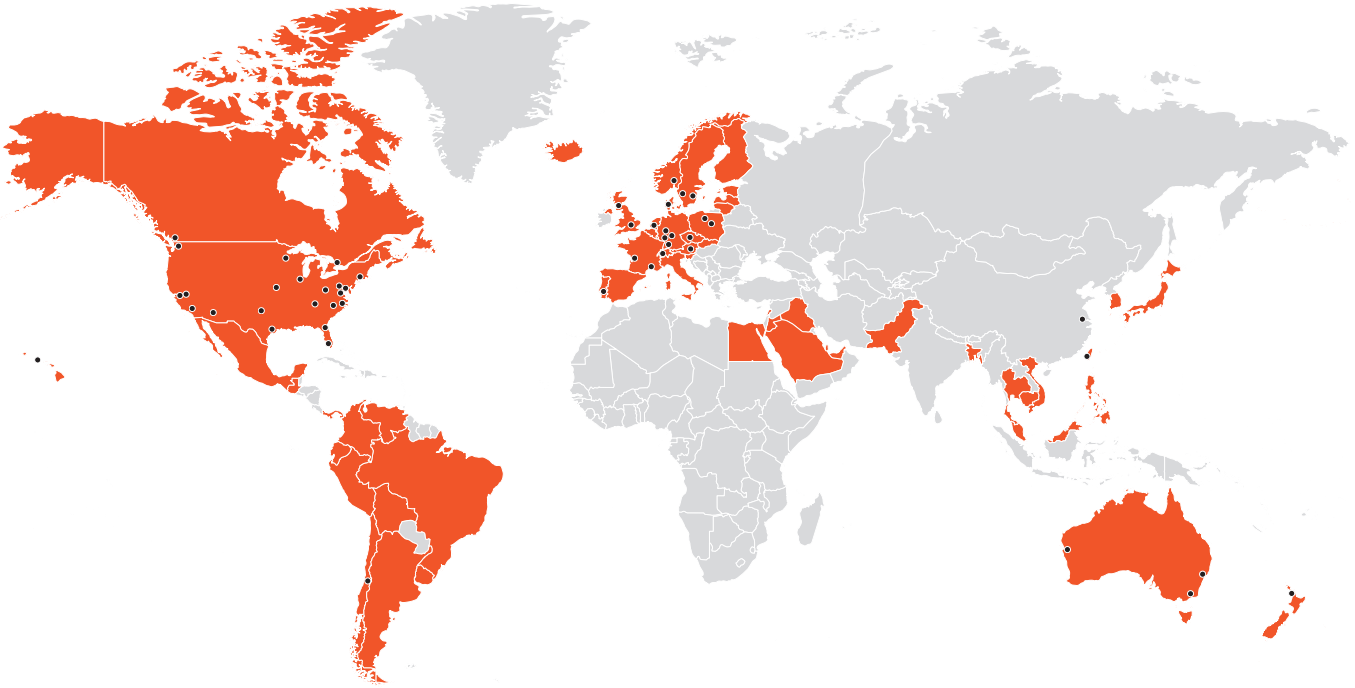

● Factories, offices, and warehouses in Australia, Austria, Canada, Chile, China, Czech Republic, Denmark, France, Germany, Netherlands, New Zealand, Norway, Poland, Portugal, Sweden, Switzerland, Taiwan, UK and USA

■ Distribution in Australia, Canada, Chile, Western Europe, part of Eastern Europe, Middle East, Japan, Korea, Egypt, Taiwan and other Asian countries, Mexico, New Zealand, UK and USA

C-F-2019TECHSUP ©2019 SIMPSON STRONG-TIE COMPANY INC.

All rights reserved. This catalog may not be reproduced in whole or in part without the prior written approval of Simpson Strong-Tie Company Inc.

Company Information

The Simpson Strong-Tie Company Inc. "No Equal" Pledge Includes:

- Quality products value-engineered for the lowest installed cost at the highest-rated performance levels
- Most thoroughly tested and evaluated products in the industry
- Strategically located manufacturing and warehouse facilities
- National code agency listings
- Largest number of patented connectors in the industry
- European locations with an international sales team
- In-house R & D and Tool & Die professionals
- In-house product testing and quality control engineers

Support for industry groups, including: **AISI, APA, ASTM, ASCE, AWC, AWPA, ACI, AISC, CSI, CFSEI, ICFA, NBMDA, NLBMDA, SBCA, SDI, SETMA, SFA, SFIA, STAFDA, SREA, NFBA, TPI, WDSC, WIJMA, WTCA** and local engineering groups.

The Simpson Strong-Tie Quality Policy

We help people build safer structures economically. We do this by designing, engineering and manufacturing "No Equal" structural connectors and other related products that meet or exceed our customers' needs and expectations. Everyone is responsible for product quality and is committed to ensuring the effectiveness of the Quality Management System.

Karen Colonias
President,
Chief Executive Officer

Getting Fast Technical Support

When calling for engineering technical support, having the following information at hand will help us to serve you promptly and efficiently.

- Which Simpson Strong-Tie catalog are you using? (See the front cover for the catalog number.)
- Which Simpson Strong-Tie product are you using?
- What is the type and thickness of the materials you are fastening?
- What is your load requirement?
- If using a Quik Drive attachment:

  What attachment are you using?

  What is the RPM range of your screwdriver motor or model number?

We Are ISO 9001-2008 Registered

Simpson Strong-Tie is an ISO 9001-2008 registered company. ISO 9001-2008 is an internationally recognized quality assurance system which lets our domestic and international customers know that they can count on the consistent quality of our products and services.

ISO 14001

Our French (St. Gemme la Plaine) and UK facilities are ISO 14001 certified. This standard states the requirements for an environmental management system, and applies to the environmental aspects over which our company has control and can be expected to have an influence.

OHSAS 18001

Our Tamworth, UK facility is OHSAS 18001 certified. This certification reflects an internationally applied British Standard for occupational health and safety management systems.

To learn more about these certifications and organizations, please visit ISO.org, ICCSafe.org and bsigroup.com.

General Information 7—19
Wood and Engineered-Wood Fastening 20—101
Deck Applications 102—123
Metal-to-Wood and Connector Fastening 124—137
Nonmetal-to-Metal Fastening 138—143
CFS Systems 144—149
General Metal-to-Metal Fastening 150—161

C-F-2019TECHSUP ©2019 SIMPSON STRONG-TIE COMPANY INC.

Important Information — Warnings and Warranties

Warning

Simpson Strong-Tie® fasteners and fastening products are designed and tested for certain applications and environments. To obtain optimal performance from Simpson Strong-Tie products, the products must be properly installed and used in accordance with the installation instructions and design limits provided by Simpson Strong-Tie Company Inc.

To ensure proper installation and use, designers and installers must carefully read the following General Notes, catalog pages for specific product installation instructions and notes.

Proper product installation requires careful attention to all notes and instructions. Installers, designers, engineers and consumers should consult the Simpson Strong-Tie Company Inc. website at **strongtie.com** to obtain additional design and installation information, including:

- Information on workshops Simpson Strong-Tie conducts at various training centers throughout the country
- Code Reports
- Technical fliers and bulletins
- Corrosion information
- Answers to frequently asked questions and technical topics

Failure to follow fully all of the notes and instructions provided by Simpson Strong-Tie Company Inc. may result in improper installation of products. Improperly installed products may not perform to the specifications set forth in this catalog.

Simpson Strong-Tie Company Inc. does not guarantee the performance or safety of products that are modified, improperly installed or not used in accordance with the design and load limits set forth in this catalog.

Terms and Conditions of Sale

Product Use

Products in this catalog are designed and manufactured for the specific purposes shown, and should not be used for any other purposes unless approved by a qualified Designer. Modifications to products or changes in installation procedures should only be made by a qualified Designer. The performance of such modified products or altered installation procedures is the sole responsibility of the Designer.

Indemnity

Customer or Designers modifying products or installation procedures, or designing non-catalog products for fabrication by Simpson Strong-Tie Company Inc. shall, regardless of specific instructions to the user, indemnify, defend, and hold harmless Simpson Strong-Tie Company Inc. for any and all claimed loss or damage occasioned in whole or in part by non-catalog or modified products.

Non-Catalog and Modified Products

Consult Simpson Strong-Tie Company Inc. for applications for which there is no catalog product or for fasteners for use in applications not specifically listed for the product.

Non-catalog products must be designed by the customer and will be supplied by Simpson Strong-Tie Company Inc. in accordance with customer specifications.

Simpson Strong-Tie Company Inc. cannot and does not make any representations regarding the suitability of use or load-carrying capacities of non-catalog products. Simpson Strong-Tie Company Inc. provides no warranty, express or implied, on non-catalog products. F.O.B. shipping point unless otherwise specified.

Limited Warranty

This Limited Warranty must be read in conjunction with the General Notes, Corrosion Information, and Terms and Conditions of Sale.

Simpson Strong-Tie Company, Inc. (“Simpson”) warrants catalog products to be free from defects in material or manufacturing. Simpson products are further warranted for adequacy of design when used in accordance with design limits in this catalog, and properly specified and installed. This warranty does not apply to products used not in compliance with specific applications and installation procedures set forth in this catalog, or to non-catalog or modified products, or to deterioration due to environmental conditions.

Simpson products are designed to the load capacities and uses listed in this catalog. Properly installed Simpson products will perform in accordance with the specifications set forth in the applicable Simpson Strong-Tie® catalog. Additional performance limitations for specific products may be listed on the applicable catalog pages.

(continued on next page)

C-F-2019TECHSUP ©2019 SIMPSON STRONG-TIE COMPANY INC.

Limited Warranty (cont.)

Due to the particular characteristics of potential impact events, the specific design and location of the structure, the building materials used, the quality of construction, and the condition of the soils involved, damage may nonetheless result to a structure and its contents even if the loads resulting from the impact event do not exceed Simpson Strong-Tie catalog specifications and Simpson Strong-Tie® products are properly installed in accordance with applicable building codes. All warranty obligations of Simpson shall be limited, at the discretion of Simpson to repair or replacement of the defective part(s). These remedies shall constitute Simpson's sole obligation and sole remedy of purchaser under this warranty. This warranty may change periodically — consult this website for current information.

SIMPSON DISCLAIMS ALL OTHER WARRANTIES, EXPRESS OR IMPLIED, INCLUDING BUT NOT LIMITED TO IMPLIED WARRANTIES OF MERCHANTABILITY AND FITNESS FOR A PARTICULAR PURPOSE. IN NO EVENT WILL SIMPSON BE LIABLE FOR INCIDENTAL, CONSEQUENTIAL, PUNITIVE OR SPECIAL DAMAGES OR DIRECT OR INDIRECT LOSS OF ANY KIND, INCLUDING BUT NOT LIMITED TO PROPERTY DAMAGE AND PERSONAL INJURY. SIMPSON'S ENTIRE LIABILITY IS LIMITED TO THE PURCHASE PRICE OF THE PRODUCT. SOME STATES DO NOT ALLOW LIMITATIONS ON IMPLIED WARRANTIES, OR THE EXCLUSION OR LIMITATION OF INCIDENTAL OR CONSEQUENTIAL DAMAGES, SO THE ABOVE LIMITATIONS AND EXCLUSIONS MAY NOT APPLY TO YOU. THIS LIMITED WARRANTY GIVES YOU SPECIFIC LEGAL RIGHTS, AND YOU MAY ALSO HAVE OTHER RIGHTS THAT VARY FROM STATE TO STATE.

General Notes

These notes are provided to ensure proper selection and installation of Simpson Strong-Tie Company Inc. products and must be followed carefully.

a. Simpson Strong-Tie Company Inc. reserves the right to change specifications, designs and models without notice or liability for such changes.

b. Do not exceed published loads, doing so could jeopardize the connection.

c. A fastener that splits the wood will not take the design load. Evaluate splits to determine if the connection will perform as required. Dry wood may split easily and should be evaluated as required. If wood tends to split consider pre-boring holes with diameters specified in the 2015 Edition National Design Specification (NDS) sections 12.1.5 for screws and 12.1.6 for nails.

d. Fasteners may break if driven into hard materials or if countersunk below the surface of the substrate fastened.

e. Do not overdrive fasteners. Overdriven fasteners may have a reduction in shear and pull-through capacity.

f. Use products only in accordance with all instructions.

g. All specified fasteners must be installed according to the instructions in this catalog.

h. There are many choices of fasteners, tools and other products. It is often difficult to determine which type of product is best suited for your application. In some cases, there may be more than one type of product that will work well. The information in this catalog is intended to guide the Designer toward the product best suited for the specific application, use and environment. The choice of which product to use should be made by a qualified Designer.

i. All connected members and related elements shall be designed by the Designer.

j. Select fasteners of a type, size, length, thread, head, coating, material, point and other characteristics suitable for your application, use and environment. Incorrect fastener selection may cause the connection to fail.

k. If using a fastener from this catalog with any other Simpson Strong-Tie product, consult the appropriate Simpson Strong-Tie catalog or **strongtie.com** for detailed information concerning the other product.

l. Only use fasteners for their intended purpose as described in this publication. Connection failures can result from inappropriate substitution.

m. Test drive fasteners to assure fasteners install correctly.

n. The term "Designer" used throughout this catalog is intended to mean a licensed/certified building design professional, a licensed professional engineer or licensed architect.

o. Follow material manufacturer's installation instructions and fastener recommendations.

p. Unless otherwise noted, nail "penny size" does not imply specific diameters or load capacities. Design standards must be used in conjunction with fastener material, diameter and length to determine acceptable uses.

q. Use Quik Drive® tools only with authentic Quik Drive fasteners. Other fasteners will void the warranty and may cause the tool to malfunction and become damaged.

r. If a Quik Drive product is compatible with a specified tool, do not use the product with any other tool.

s. Power-driven fasteners may deflect and injure the operator or others. Follow the tool manufacturer's operating instructions and use appropriate safety equipment.

t. Choose the proper tool to suit the fastener and applications.

u. Use proper safety equipment and follow all safety instructions.

v. Always wear protective eyewear.

C-F-2019TECHSUP ©2019 SIMPSON STRONG-TIE COMPANY INC.

Important Information and General Notes

w. With the use of any power or power fastener, follow manufacturer's safety instructions.

x. Dissimilar metal combinations should be carefully assessed and avoided if possible.

y. All carbon steel based fasteners have the potential to corrode and rust.

z. Some hardened fasteners may have premature failure if exposed to moisture. These fasteners are recommended to be used in interior dry conditions.

aa. Select a fastener only after reading the corrosion information on pp. 11–15 of this catalog.

ab. Be aware of special conditions that may increase corrosion risk and select product accordingly.

ac. Screws made from austenitic stainless steel are generally softer and have less torsional strength than screws made from carbon steel. Simpson Strong-Tie does not assume liability for breakage or damage due to screw breakage during or after installation. Pre-drilling may be necessary in some case. For best results, drive at 2,500 rpm or less.

ad. This catalog includes all information available as of the effective date of publication. Please consult **strongtie.com** for current information.

Deck Construction and Fastening Tips

- Before beginning construction, allow your decking materials to acclimate to the jobsite conditions. A freshly pressure treated deck board can contain over a gallon of liquid.
- Select the proper fastener based on the importance of the connection, exposure, and the materials that are being fastened. Consult pp. 11–15 of this catalog or **strongtie.com** for guidelines on choosing the correct fastener.
- Consider using 300 Series stainless-steel fasteners when elevated exposure conditions may exist, such as presence of de-icing salts or close proximity to swimming pools, hot tubs, sprinklers, ponds, foliage and other resident moisture sources. For composite decking, follow manufacturer's fastening requirements.
- Inadequate gap spacing between boards can put additional load on the fasteners and lead to broken screws or nail pops. For deck board spacing recommendations, refer to the board manufacturer. Spacing for wood decks depends on wood species and moisture content; for composites, consult manufacturer installation instructions.
- For wood decking, orient the boards "bark side up" to help shed water.
- Use caution to avoid overdriving fasteners during installation. Overdriving can cause fastener breakage and create a counterbore where water can pool, facilitating corrosion and decay.
- Allow for proper water drainage. A deck should slope away from the structure a minimum of ⅛" for every 8' to reduce the possibility of standing water.
- If ¾" decking is to be installed diagonally, reduce the on-center joist spacing to 12" versus standard 16".
- Adequate ventilation is necessary to minimize cupping, warping and other weathering related defects. Construct the deck a minimum of 18 inches off the ground to allow proper airflow. If this is not possible, reduce on-center joist spacing to 12" versus standard 16". A moisture barrier (landscape fabric) under the deck, covered with gravel is also a good practice.
- Proper maintenance is essential. Staining and sealing, along with periodic inspection of fasteners and hardware, will potentially add years to the life of the deck.

For more information on deck construction and products from Simpson Strong-Tie, please see our Deck Connection and Fastening Guide (F-DECKCODE) and the technical bulletin, Guardrail Post Installations Using Strong-Drive® SDWS Timber Screws (T-F-SDWSGRD).

Please refer to the American Wood Council's Prescriptive Residential Wood Deck Construction Guide (DCA 6) for important information on best practices and code compliant design.

Trademark Attribution

AZEK®, Bosch®, Bostitch®, DeWalt®, Duo-Fast®, DuraLife™, E-coat®, Enhance®, Envision®, Evergrain®, Fiberon®, Grip-Rite®, Hilti®, Hitachi®, Horizon®, Makita®, Max®, Milwaukee®, MoistureShield®, N2000®, Paslode®, Porter Cable®, Powernail®, Primatech®, ProTect Advantage®, Ridgid®, Select®, Senco®, Spotnails®, TimberTech®, Trex® and Vantage Collection® are registered trademarks of their respective companies.

C-F-2019TECHSUP ©2019 SIMPSON STRONG-TIE COMPANY INC.

Corrosion Information

Understanding the Corrosion Issue

Metal connectors, fasteners and anchors can corrode and lose carrying capacity when installed in corrosive environments or when installed in contact with corrosive materials. The many variables present in a building environment make it impossible to predict accurately whether, or when, corrosion will begin to reach a critical level. This relative uncertainty makes it crucial that specifiers and users be knowledgeable about the potential risks and select a product suitable for the intended use. When there is any uncertainty about the possible corrosion risks of any installation, a qualified professional should be consulted. Because of the risks posed by corrosion, periodic inspections should be performed by a qualified engineer or qualified inspector and maintenance performed accordingly.

It's common to see some corrosion in outdoor applications. Even stainless steel can corrode. The presence of some corrosion does not mean that load capacity has been affected or that failure is imminent. If significant corrosion is apparent or suspected, then the wood, fasteners, anchors, and connectors should be inspected by a qualified engineer or qualified inspector. Replacement of affected components may be appropriate.

Because of the many variables involved, Simpson Strong-Tie cannot provide estimates of the service life of connectors, anchors, and fasteners. We suggest that all users and specifiers obtain recommendations on corrosion from the suppliers of the materials that will be used with Simpson Strong-Tie products, in particular, treated wood or concrete. We have attempted to provide basic knowledge on the subject here, and have additional information in our technical bulletins on the topic (**strongtie.com/info**). The Simpson Strong-Tie website should always be consulted for the latest information.

Corrosion Conditions

Corrosion can result from many combinations of environmental conditions, materials, construction design, and other factors, and no single guideline addresses all corrosion possibilities. Nevertheless, important corrosion information can be obtained from the American Wood Protection Association (AWPA), the International Building Code (IBC), International Residential Code (IRC), and local building codes. The following discussion provides general guidelines and approaches for the selection of Simpson Strong-Tie products for various construction conditions, but is not intended to supersede the guidelines of the AWPA, IBC, IRC, or local building codes.

Corrosion issues for Simpson Strong-Tie products generally fall into four categories:

1. Environmental and Construction Factors

Many environments and materials can cause corrosion, including ocean salt air, condensation, duration of wetness, fire retardants, fumes, fertilizers, chlorides, sulfates, preservative-treated wood, de-icing salts, dissimilar metals, soils, and more. Designers must take all of these factors into account when deciding which Simpson Strong-Tie products to use with which corrosion-resistant coatings or materials.

The design, quality of construction, and misinstallation can directly affect the corrosion resistance of products. A product intended and installed for use in dry-service environment may corrode if the structure design or building materials allow moisture intrusion, or expose the product to corrosive conditions, such as moisture or chemicals contained in the construction materials, soils, or atmospheres.

2. Chemically Treated Lumber

Some wood-preservative or fire-retardant chemicals or chemical retention levels create increased risk of corrosion and are corrosive to steel connectors and fasteners. For example, testing by Simpson Strong-Tie has shown that ACQ-Type D is more corrosive than Copper Azole, Micronized Copper Azole, or CCA-C. At the same time, other tests have shown that inorganic boron treatment chemicals, specifically SBX-DOT, are less corrosive than CCA-C.

Because different chemical treatments of wood have different corrosion effects, it's important to understand the relationship between the wood treatment chemicals and the coatings and base metals of Simpson Strong-Tie products.

The preservative-treated wood supplier should provide all of the pertinent information about the treated wood product. The information should include the AWPA Use Category Designation, wood species group, wood treatment chemical, and chemical retention. See building code requirements and appropriate evaluation reports for corrosion effects of wood treatment chemicals and for fastener corrosion resistance recommendations.

With Fire-Retardant-Treated (FRT) Wood, the 2015 and 2018 IBC Section 2304.10.5.4 and 2015 and 2018 IRC Section R317.3.4 refer to the manufacturers' recommendations for fastener corrosion requirements. In the absence of recommendations from the FRT manufacturer, the building codes require fasteners to be hot-dip galvanized, stainless steel, silicon bronze or copper. Simpson Strong-Tie further requires that the fastener is compatible with the metal connector hardware. Fastener shear and withdrawal allowable loads may be reduced in FRT lumber. Refer to the FRT manufacturer's evaluation report for potential reduction factors.

3. Dissimilar Metals and Galvanic Corrosion

Galvanic corrosion occurs when two electrochemically dissimilar metals contact each other in the presence of an electrolyte (such as water) that acts as a conductive path for metal ions to move from the more anodic to the more cathodic metal. Good detailing practice, including the following, can help reduce the possibility of galvanic corrosion of fasteners and connectors:

- Use fasteners or anchors and connectors with similar electrochemical properties
- Use insulating materials to separate dissimilar metals
- Ensure that the fastener or anchor is the cathode when dissimilar connector metals are present
- Prevent exposure to and pooling of electrolytes

Galvanic Series of Metals

Corroded End (Anode)
Magnesium, Magnesium alloys, Zinc
Aluminum 1100, Cadmium, Aluminum 2024-T4, Iron and Steel
Lead, Tin, Nickel (active), Inconel Ni-Cr alloy (active), Hastelloy alloy C (active)
Brasses, Copper, Cu-Ni alloys, Monel
Nickel (passive)
304 stainless steel (passive), 316 stainless steel (passive), Hasteloy alloy C (passive)
Silver, Titanium, Graphite, Gold, Platinum
Protected End (Cathode)

If you are uncertain about the galvanic corrosion potential of any installation, always consult with a corrosion expert. See the product pages for particular parts for more information regarding what coating systems are recommended or required for use with the parts in question.

4. Hydrogen-Assisted Stress Corrosion Cracking

Some hardened fasteners may experience premature failure from hydrogen-assisted stress-corrosion cracking if exposed to moisture. These fasteners are recommended for use only in dry-service conditions.

C-F-2019TECHSUP © 2019 SIMPSON STRONG-TIE COMPANY INC.

Guidelines for Selecting Materials and Coatings

In the discussion and charts of this section, Simpson Strong-Tie presents a system to determine which product coatings and base metals to use in a range of corrosion conditions. These are general guidelines that may not consider all relevant application criteria. Refer to product-specific information for additional guidance.

Simpson Strong-Tie evaluated the AWPA Use Categories (See AWPA U1-16) and ICC-ES AC257 Exposure Conditions and developed a set of corrosion resistance recommendations. These recommendations address the coating systems and materials used by Simpson Strong-Tie for fastener, connector, and anchor products. Although the AWPA Use Categories and ICC-ES AC257 Exposure Conditions specifically address treated-wood applications and some common corrosion agents, Simpson Strong-Tie believes that its recommendations may be applied more generally to other application conditions, insofar as the service environments discussed are similar. You should consult with a corrosion engineer concerning the application where advisable.

Step 1 — Evaluate the Corrosion Conditions

- **Dry Service:** Generally INTERIOR applications including wall and ceiling cavities, raised floor applications in enclosed buildings that have been designed to prevent condensation and exposure to other sources of moisture. Prolonged periods of wetness during construction should also be considered, as this may constitute a Wet Service or Elevated Service condition. Dry Service is typical of AWPA UC1 and UC2 for wood treatment and AC257 Exposure Condition 1. Keep in mind that dry-service environment may contain airborne salts. AC257 Exposure Condition 2 reflects the presence of airborne salt in a dry-service environment and corrosion hazard to exposed metal surfaces. It does not include effects of treatment chemicals. This condition is generally considered in Elevated and Uncertain assessments..
- **Wet Service:** Generally EXTERIOR construction in conditions other than elevated service. These include Exterior Protected and Exposed and General Use Ground Contact as described by AWPA UC4A. The AWPA U1 standard classifies exterior above-ground treatments as Use Categories UC3 (A and B) depending on moisture run-off; and for exterior ground-contact levels of protection, it has Use Categories UC4 (A-C). ICC-ES AC257 considers the exterior exposure to be limited by the presence of treatment chemicals, and corrosion accelerators. In general, the AC257 Exposure Condition 1 includes AWPA Use Categories UC1 (interior/dry) and UC2 (interior/damp), while Exposure Condition 3 is a surrogate to UC3A, 3B, and 4A (exterior, above-ground and ground-contact, general use). The ICC-ES AC257 Exposure Conditions 2 and 4 are exposures that are salt environments.
- **Elevated Service:** Includes fumes, fertilizers, soil, some preservative-treated wood (AWPA UC4B and UC4C), industrial-zone atmospheres, acid rain, salt air, and other corrosive elements.
- **Uncertain:** Unknown exposure, materials, or treatment chemicals.
- **Ocean/Water Front Service:** Marine environments that include airborne chlorides, salt air, and some salt splash. Environments with de-icing salts are included.

C-F-2019TECHSUP ©2019 SIMPSON STRONG-TIE COMPANY INC.

Corrosion Information

Step 2 — Determine Your Corrosion Resistance Classification

Corrosion Resistance Classifications

Environment	Material to Be Fastened						
	Untreated Wood or Other Material	Preservative-Treated Wood					FRT Wood
		SBX-DOT Zinc Borate	Chemical Retention ≤ AWPA, UC4A	Chemical Retention > AWPA, UC4A	ACZA	Other or Uncertain	
Dry Service	Low	Low	Low	High	Medium	High	Medium
Wet Service	Medium	N/A	Medium	High	High	High	High
Elevated Service	High	N/A	Severe	Severe	High	Severe	N/A
Uncertain	High	High	High	Severe	High	Severe	Severe
Ocean/Water Front	Severe	N/A	Severe	Severe	Severe	Severe	N/A

Additional Considerations

1. Always consider the importance of the connection as well as the cost of maintenance and replacement.
2. If the information about treatment chemicals in an application is incomplete, or if there is any uncertainty as to the service environment of any application, Simpson Strong-Tie recommends the use of a Type 300 Series stainless steel. Simpson Strong-Tie has evaluated the corrosion effects of various formulations of wood treatment chemicals ACZA, ACQ, CCA, MCA, CA, and salt as corrosion accelerators. Simpson Strong-Tie has not evaluated all formulations and retentions of the named wood treatment chemicals other than to use coatings and materials in the severe category. Manufacturers may independently provide test results or other product information. Simpson Strong-Tie expresses no opinion regarding such information.
3. Type 316/305/304 stainless-steel products are recommended where preservative-treated wood used in ground contact has a chemical retention level greater than those for AWPA UC4A; CA-C, 0.15 pcf; CA-B, 0.21 pcf; micronized CA-C, 0.14 pcf; micronized CA-B, 0.15 pcf; ACQ-Type D (or C), 0.40 pcf. When wood treated with micronized CA-C and micronized CA-B with treatment retentions up to UC4B is in dry service, hot-dip galvanized fasteners and connectors may be suitable.
4. Mechanical galvanizations C3 and N2000 should not be used in conditions that would be more corrosive than AWPA UC3A (exterior, above ground, rapid water run off).
5. Some chemically treated wood may have chemical retentions greater than specification, particularly near the surface, making it potentially more corrosive than chemically treated wood with lower retentions. If this condition is suspected, use Type 316/305/304 stainless-steel, silicon bronze, or copper fasteners.
6. Some woods, such as cedars, redwood, and oak, contain water-soluble tannins and are susceptible to staining when in contact with metal connectors and fasteners. According to the California Redwood Association (calredwood.org), applying a quality finish to all surfaces of the wood prior to installation can help reduce staining.
7. Anchors, fasteners and connectors in contact with FRT lumber shall be hot-dip galvanized or stainless steel, unless recommended otherwise by the FRT manufacturer. Many FRT manufacturers permit low-corrosion-resistant connector and fastener coatings for dry-service conditions.
8. Simpson Strong-Tie does not recommend painting stainless-steel anchors, fasteners or connectors. Imperfections or damage to the paint can facilitate collection of dirt and water that can degrade or block the passive formation of the protective chromium oxide film. When this happens, crevice corrosion can initiate and eventually become visible as a brown stain or red rust. Painting usually does not improve the corrosion resistance of stainless steel.

C-F-2019TECHSUP ©2019 SIMPSON STRONG-TIE COMPANY INC.

Corrosion Resistance Classifications

Simpson Strong-Tie® fasteners feature a wide range of materials and coatings designed to meet specific performance criteria. It is important to select a material and/or coating that is suitable for the intended application and environment based upon factors such as corrosion resistance and mechanical properties of the material. See p. 12 for more information on selecting fasteners based upon corrosion resistance.

Simpson Strong-Tie Company Inc. welcomes the opportunity to provide assistance in fastener selection. Please call (800) 999-5099 in the event that technical support is needed.

Low Level of Corrosion Resistance

Clear Zinc
Electroplated clear zinc is applied in accordance with ASTM F1941. In the ASTM B117 salt spray test, clear zinc provides 12 to 24 hours of corrosion protection before the first appearance of red rust depending on coating thickness.

Electrocoating (E-Coat™)
Electrocoat utilizes electrical current to deposit the coating material onto the fastener. After application, the coating is oven cured. Electrocoat is intended for dry service, low-corrosion applications and is suitable for use with FRT in medium-corrosion, dry-service applications.

Gray Phosphate
Gray phosphate provides a minimum level of corrosion resistance and is intended for dry, low-corrosion applications.

Black Phosphate
Black phosphate provides a minimum level of corrosion resistance and is intended for dry, low-corrosion applications.

Yellow Zinc
Electroplated zinc applied in accordance with ASTM F1941. In the ASTM B117 salt spray test, yellow zinc provides at least 24 hours of corrosion protection before the first appearance of red rust.

Class 1 Zinc Electroplate
Electroplated zinc applied in accordance with ASTM A641, Class 1. This is an electroplated zinc coating that provides a low level of corrosion resistance. The Class 1 coating has no specified red rust performance criteria in the B117 salt spray test.

Type 410 Stainless Steel
Type 410 stainless steel is a low-carbon martensitic grade of stainless steel that can be hardened and is inherently magnetic. This material provides corrosion resistance in mild atmospheres and many mild chemical environments.

Coated Zinc
This coating system consists of an electroplated zinc base layer with an E-Coat top coat. It provides corrosion resistance that is adequate for low corrosion environments. In ASTM B117 salt spray testing at 500 hours of exposure, fasteners with this coating have an average red rust of less than 5%.

Medium Level of Corrosion Resistance

Quik Guard® Coating
Quik Guard coatings are proprietary coating systems that consist of an electroplated zinc base layer and organic top coats. The corrosion resistance is equivalent to hot-dip galvanization (ASTM A153, Class D) in some exposures and in most non-marine environments, and described by ICC-ES, AC257 Exposures 1 and 3.

Double-Barrier Coating
The Simpson Strong-Tie double-barrier coating is a proprietary coating that provides a level of corrosion resistance that is equivalent to hot-dip galvanization (ASTM A153, Class D) in most non-marine environments and as described by ICC-ES, AC257 Exposures 1 and 3.

Class D Hot-Dip Galvanized, ASTM A153
The Class D hot-dip galvanization is a coating that meets the requirements of ASTM A153, Class D, which is a minimum average of 1.0 oz/ft^2 [305 g/m^2] of zinc applied by a hot-dip process. Hot-dip galvanized fasteners are compliant with the 2015 and 2018 IBC and IRC.

Class 55 Mechanically Galvanized, ASTM B695
This is a mechanically applied zinc coating that meets the requirements of ASTM B695, Class 55, which is a minimum average thickness of 55 microns with a supplementary overcoat. Screws with a Class 55 coating meet the requirements for use in preservative-treated and fire-retardant-treated wood as stated in the 2015 and 2018 IRC.

N2000® Mechanically Galvanized
This is a mechanically applied proprietary zinc coating with a supplementary overcoat. In the ASTM B117 salt spray test at 1000 hours of exposure, fasteners with the N2000 coating exhibit average red rust less than 15%.

C-3 Mechanically Galvanized
A mechanically applied coating that is zinc with a minimum of 20% tin in accordance with Australian Standard AS3566.2. In the ASTM B117 salt spray test at 1,000 hours of exposure, fasteners with the C3 coating exhibit average red rust of less than 2%.

C-F-2019TECHSUP ©2019 SIMPSON STRONG-TIE COMPANY INC.

Corrosion Resistance Classifications

High Level of Corrosion Resistance

Types 304 and 305 Stainless Steel

Types 304 and 305 stainless steels are nickel-chromium austenitic grades of stainless steel. Types 304 and 305 stainless steels are not hardened by heat treatment and are inherently nonmagnetic.

They provide very good corrosion resistance and are suitable for use in many corrosive environments. Fasteners made from Types 304 and 305 stainless steels are compliant with the 2015 and 2018 IBC and IRC.

Severe Level of Corrosion Resistance

Type 316 Stainless Steel

Type 316 stainless steel is a nickel-chromium austenitic grade of stainless steel with 2-3% Molybdenum. Type 316 stainless steel is not hardened by heat treatment and is inherently nonmagnetic. It provides a level of corrosion protection suitable for severe environments, especially environments with chlorides. Type 316 stainless steel fasteners are compliant with the 2015 and 2018 IBC and IRC.

Class C, Hot-Dip Galvanized, ASTM A153

Class C hot-dip galvanization is a coating that meets the requirements of ASTM A153, Class C, which is a minimum average of 1.25 oz/ft^2 [381 g/m^2] of zinc applied by a hot-dip process. Hot-dip galvanized fasteners are compliant with the 2015 and 2018 IBC and IRC.

Copper

Copper wire used for the manufacture of fasteners is in compliance with the material specifications of ASTM F1667. Copper fasteners meet the requirements for use in preservative-treated and fire-retardant-treated wood as stated in the 2012 and 2015 IBC and IRC. Compatibility with proprietary wood treatment chemicals should be verified against applicable evaluation reports.

Passivation of Stainless-Steel Fasteners

Stainless steels are designed to naturally self-passivate by forming a chromium oxide layer. Corrosion resistance of some stainless-steel fasteners is enhanced by a post-fabrication passivation process. The passivation process uses an acid bath to strip free iron from the surface and an oxidizer to force conversion of the surface chromium to the oxide form.

General Note about Salt Spray Testing

Salt spray testing in accordance with ASTM B117 is not intended to represent real-world corrosion performance of fastener coatings. It should only be used for comparative evaluation between like products. Many variables may affect the outcome of the salt spray test such as base material, fastener features, coating and the material where it is installed.

C-F-2019TECHSUP ©2019 SIMPSON STRONG-TIE COMPANY INC.

General Load Tables

Screw Strength

Model No.	Screw Size	Nominal Strength (lb.)		Load Resistance Factor Design (LRFD) (lb.)		Allowable Stress Design (ASD) (lb.)	
		Shear	Tension	Shear	Tension	Shear	Tension
		P_{ss}	P_{ts}	ϕP_{ss}	ϕP_{ts}	P_{ss}/Ω	P_{ts}/Ω
Steel to Steel							
FPHSD34S1016	#10 x ¾"	1,710	2,215	855	1,110	570	740
FPHSD34S1214	#12 x ¾"	2,535	3,380	1,265	1,690	845	1,125
PHSD34S0818	#8 x ¾"	1,495	1,810	750	905	500	605
E1B1414	#14 x 1"	3,130	5,395	1,565	2,700	1,045	1,800
XEQ34B1016	#10 x ¾"	1,390	2,350	695	1,175	465	785
Steel Decking							
XU34S1016	#10 x ¾"	1,735	2,895	870	1,450	580	965
X1S1016	#10 x 1"	1,625	2,930	810	1,465	540	975
X1S1214	#12 x 1"	2,525	3,750	1,265	1,875	840	1,250
XMQ114S1224	#12 x 1¼"	3,110	4,985	1,555	2,495	1,035	1,660
XLQ114T1224	#12 x 1¼"	3,110	4,985	1,555	2,495	1,035	1,660
Metal-Roofing Clip to Steel							
PCSD1S1016	#10 x 1"	1,705	2,380	850	1,190	570	795
PCSD1S1214	#12 x 1"	1,760	3,180	880	1,590	585	1,060
SSPCSD1S1016	#10 x 1"	1,892	3,045	985	1,588	631	1,015
Metal-Roofing Clip to Wood							
PC1BS1012	#10-12 x 1"	1,415	2,080	710	1,040	470	695
PC1BS1211	#12-11 x 1"	1,715	3,080	860	1,540	570	1,025
Drywall							
DWF114PS	#6 x 1¼"	1,255	1,575	630	790	420	525
DWF158PS	#6 x 1⅝"	1,255	1,575	630	790	420	525
DWFSD158PS	#6 x 1⅝"	1,260	1,720	630	860	420	575
DWFSDQ114PS	#6 x 1¼"	1,260	1,720	630	860	420	575
DWFSD178PS	#6 x 1⅞"	1,260	1,720	630	860	420	575
DWFSD238PS	#8 x 2⅜"	1,260	1,720	630	860	420	575
Wood to Steel							
FHSD114S0818	#8 x 1¼"	1,221	1,884	637	983	407	628
SSFHSD112S1016	#10 x 1½"	2,275	3,435	1,140	1,720	760	1,145
PPSD11516S0818	#8 x 1 15/16"	1,675	2,065	840	1,035	560	690
PPSD134S1016	#10 x 1¾"	2,000	2,220	1,000	1,110	665	740
PPSD3S1016	#10 x 3"	2,000	2,220	1,000	1,110	665	740
CBSDQ158S	#8 x 1⅝"	1,745	2,500	870	1,250	580	835
CBSDQ214S	#10 x 2¼"	2,205	3,295	1,105	1,650	735	1,100
TB1445S	#14 x 1¾"	3,690	4,625	1,845	2,315	1,230	1,540
TB1460S	#14 x 2⅜"	3,690	4,625	1,845	2,315	1,230	1,540
TB1475S	#14 x 3"	3,690	4,625	1,845	2,315	1,230	1,540

1. Table based on testing per AISI Standard Test Method S904-08.
2. Factor of Safety (Ω), and Resistance Factor (ϕ) are determined per AISI S100-12 Section F1.
3. P_{ss} and P_{ts} are nominal shear strength and nominal tension strength values for the screw, respectively, and are also known as the average (ultimate) values of all tests; determined by independent laboratory testing.

C-F-2019TECHSUP ©2019 SIMPSON STRONG-TIE COMPANY INC.

General Material Safety Data (SDS) Note

Safety Data Sheets (SDS)

For Fasteners

Simpson Strong-Tie Company Inc. manufactures and sells fasteners, metal connectors and mechanical concrete anchors. Fastener products include and are not limited to nails, screws and staples. For the purpose of hazard communication, fastener products are “Articles” as defined in 29 CFR 1910.1200(c):

“Article means a manufactured item other than a fluid or particle: (i) which is formed to a specific shape or design during manufacture; (ii) which has end use function(s) dependent in whole or in part upon its shape or design during end use; and (iii) which under normal conditions of use does not release more than very small quantities, e.g., minute or trace amounts of a hazardous chemical (as determined under paragraph (d) of this section), and does not pose a physical hazard or health risk to employees.”

As Articles, fastener products are exempt from Safety Data Sheet (SDS) requirements under the Hazard Communication Standard (29 CFR 1910.1200(b)(6)(v)). For this reason, Simpson Strong-Tie does not have available SDS sheets for its fastener products.

This information is current as of the date of this publication and is subject to change without notice. See **strongtie.com** for possible updates.

C-F-2019TECHSUP ©2019 SIMPSON STRONG-TIE COMPANY INC.

General Information

Application for Selecting the Correct Fastener for the Job

Explore our extensive array of screws, nails and specialty fasteners to find the exact product you need in seconds. Search by multiple criteria, such as application, type and model number.

Features:

- Thumbnails for more information about product options
- Easily share links to a specific set of results
- Mobile-friendly design
- New selection of penny size options to choose from

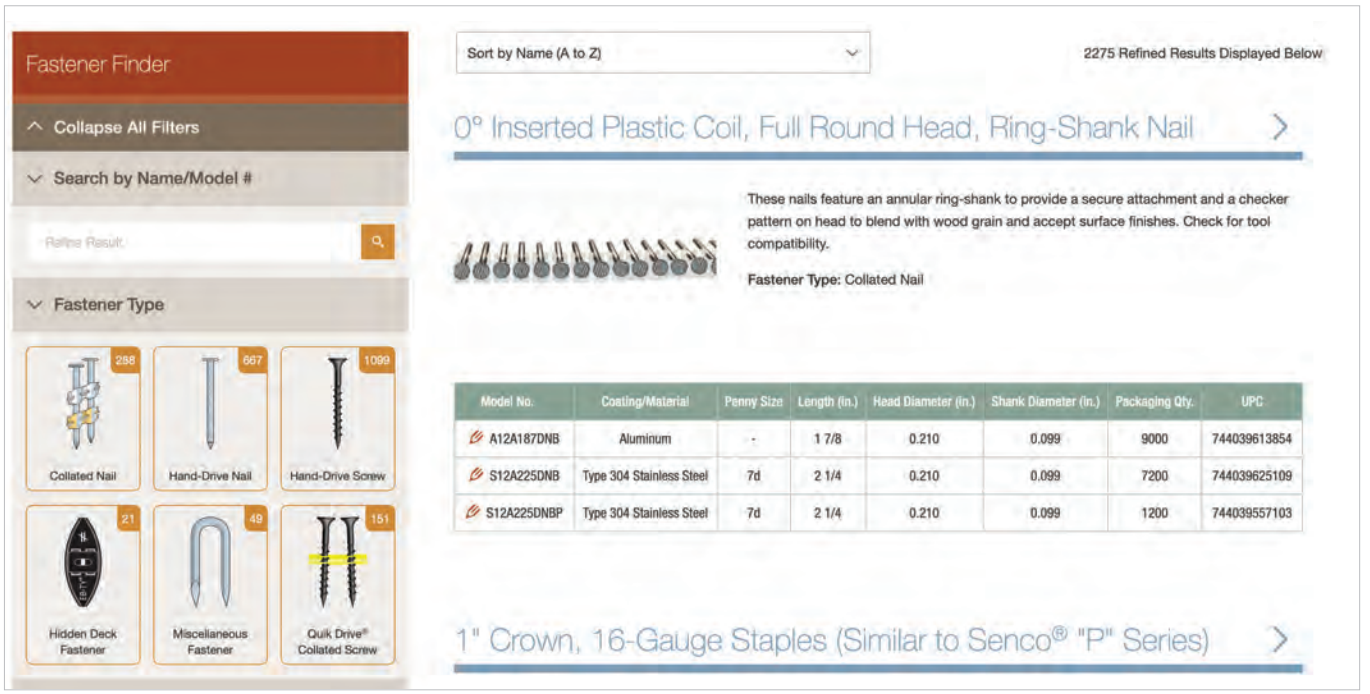

C-F-2019TECHSUP ©2019 SIMPSON STRONG-TIE COMPANY INC.

Select the Right Fastener for Your Job — Fastener Designer App

The Fastener Designer web-based application is a quick, easy-to-use tool for providing Simpson Strong-Tie® structural screw alternatives to specified standard NDS fasteners in withdrawal, lateral load parallel-to-grain, lateral load perpendicular-to-grain, ledger and multi-ply connections. The Fastener Designer web-based application provides detailed load calculations for both the NDS fasteners and recommended Simpson Strong-Tie structural screws. See **strongtie.com/webapps/fastenerdesigner** for more information.

Select fasteners based on:

- Withdrawal loading
- Lateral loads, parallel or perpendicular to grain
- Multi-ply connections
- Corrosion resistance
- Ledger connections

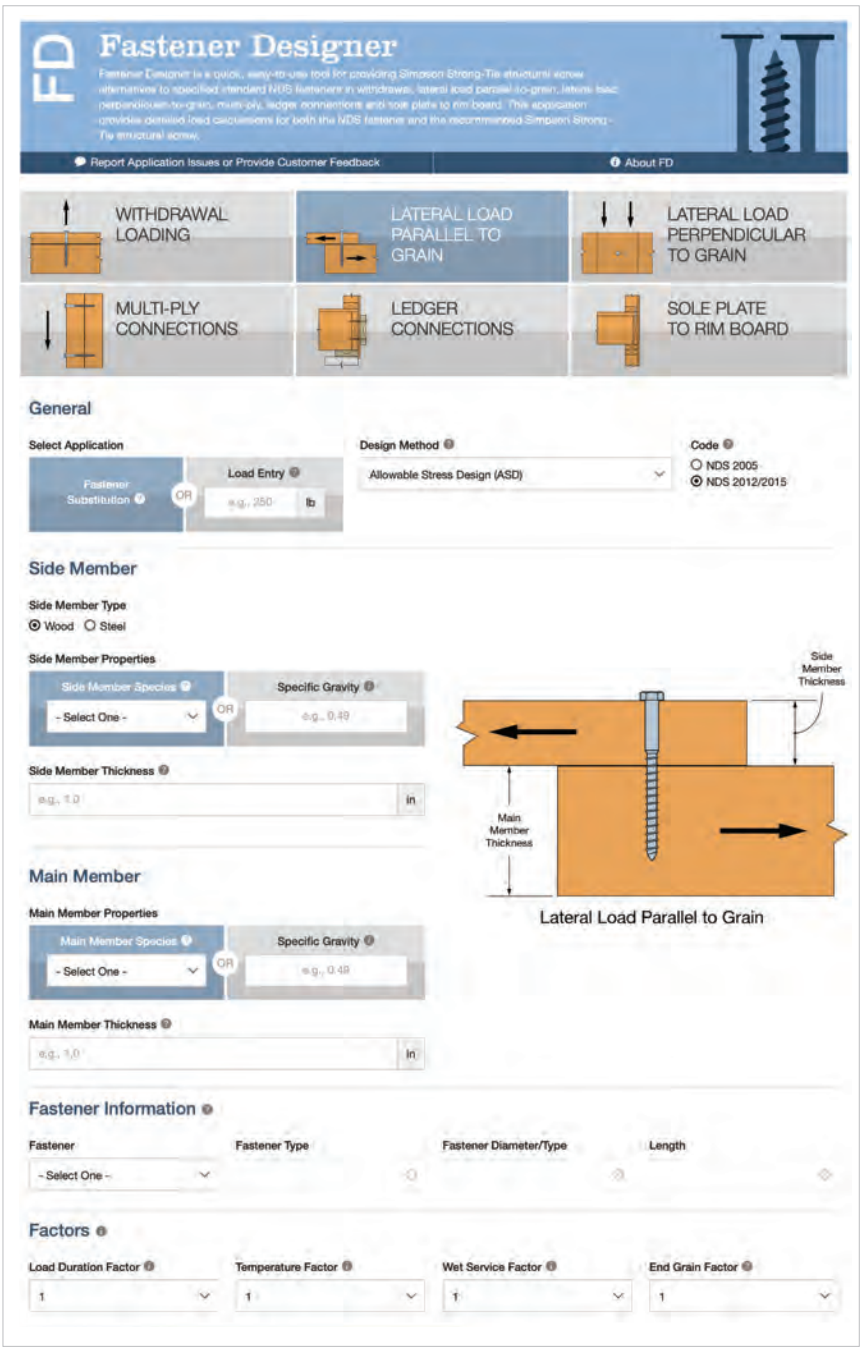

Fastener Designer App — Lateral Load Parallel-to-Grain Input Screen

C-F-2019TECHSUP ©2019 SIMPSON STRONG-TIE COMPANY INC.

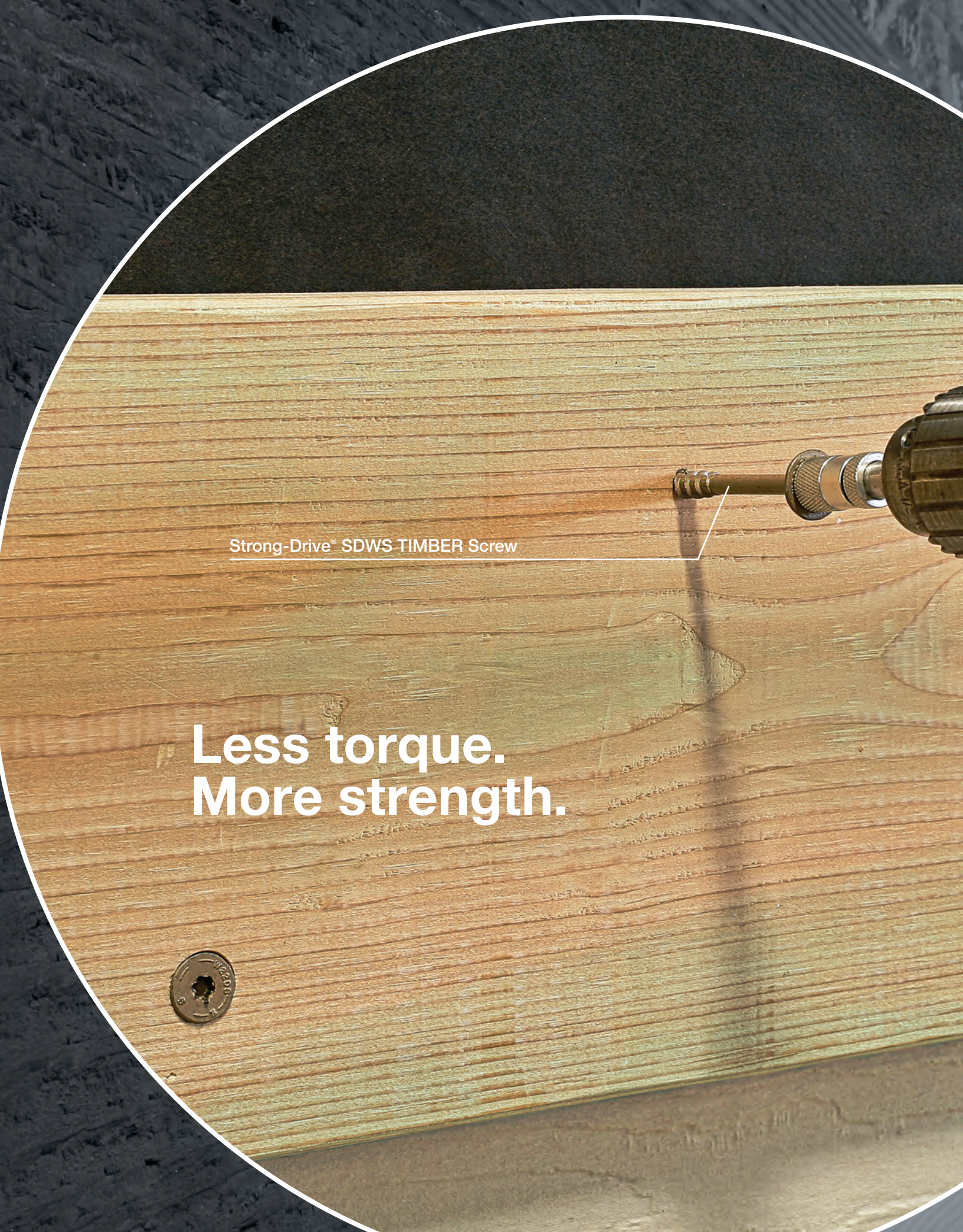
Strong-Drive® SDWS TIMBER Screw
Less torque.
More strength.

SIMPSON Strong-Tie®

Wood and Engineered-Wood Fastening

Structural and General Fastening
Strong-Drive® SDWS TIMBER Screw 22
Strong-Drive® SDWS FRAMING Screw. 26
Strong-Drive® DWP WOOD SS Screw 30
Strong-Drive® SDWS TIMBER SS Screw 32
Strong-Drive® SDWS LOG Screw 33
Strong-Drive® SDWH TIMBER-HEX Screw. 36
Strong-Drive® SDWH TIMBER-HEX HDG Screw 40
Strong-Drive® SDWH TIMBER-HEX SS Screw. 42
Strong-Drive® SD CONNECTOR Screw 43
Strong-Drive® SDS HEAVY-DUTY CONNECTOR Screw 44

Ledger Structural Fastening Applications
Strong-Drive® SDWS TIMBER Screw 45
Strong-Drive® SDWH TIMBER-HEX Screw. 48
Strong-Drive® SDS HEAVY-DUTY CONNECTOR Screw 51

Exterior Foam-to-Wood Fastening
Strong-Drive® SDWS TIMBER Screw 52

Rafter/Truss/Plate Fastening
Strong-Drive® SDWC TRUSS Screw. 54
Quik Stik™ Rafter and Truss Fastening System. 69

Sole/Top Plate-to-Rim Fastening
Strong-Drive® SDWC TRUSS Screw. 73
Strong-Drive® SDWV SOLE-TO-RIM Screw 74
Strong-Drive® SDWS TIMBER Screw 75
Strong-Drive® SDWH TIMBER-HEX Screw. 76
Strong-Drive® SDWS TIMBER Screw and
SDWH TIMBER-HEX Screw 77
Strong-Drive® SDS HEAVY-DUTY CONNECTOR Screw 79

Floor-to-Floor Fastening
Strong-Drive® SDWF FLOOR-TO-FLOOR Screw 80
Strong-Drive® SDWS LOG and
SDWH TIMBER-HEX HDG Screw 84

Subfloor and Sheathing Fastening
Strong-Drive® WSV SUBFLOOR Screw 86
Strong-Drive® WSNTL SUBFLOOR Screw 88

Multi-Ply Fastening
Strong-Drive® SDW TRUSS-PLY and EWP-PLY Screws 90
Strong-Drive® WSV SUBFLOOR Screw 98

Mass Timber/CLT Fastening
Structural Screw Applications 99

Strong-Drive® SDWS TIMBER Screw

Structural Wood-to-Wood Connections Including Ledgers, Indoor/Outdoor Projects

Designed to provide an easy-to-install, high-strength alternative to through-bolting and traditional lag screws. The Strong-Drive SDWS Timber screws are ideal for the contractor and do-it-yourselfer alike.

Double-barrier coating provides corrosion resistance equivalent to hot-dip galvanization, making it suitable for certain exterior and preservative-treated wood applications, as described in the evaluation report.

Codes/Standards: IAPMO-UES ER-192, State of Florida FL13975

US Patent 9,523,383

For more information, see p. 53, C-F-2019 Fastening Systems Catalog

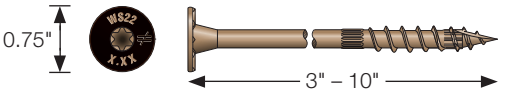

SDWS Timber Screw — Allowable Shear Loads — Douglas Fir–Larch and Southern Pine Lumber

Size Dia.x L (in.)	Model No.	Thread Length (in.)	Reference DFL/SP Allowable Shear Loads (lb.)								
			Wood Side Member Thickness (in.)								
			1.5	2	2.5	3	3.5	4	4.5	6	8
0.22 x 3	SDWS22300DB	1½	255	—	—	—	—	—	—	—	—
0.22 x 4	SDWS22400DB	2⅜	405	405	305	—	—	—	—	—	—
0.22 x 5	SDWS22500DB	2¾	405	405	360	360	325	—	—	—	—
0.22 x 6	SDWS22600DB	2¾	405	405	405	405	365	365	355	—	—
0.22 x 8	SDWS22800DB	2¾	405	405	405	405	395	395	395	395	—
0.22 x 10	SDWS221000DB	2¾	405	405	405	405	395	395	395	395	395

See footnotes below.

SDWS Timber Screw — Allowable Shear Loads — Spruce-Pine-Fir and Hem-Fir Lumber

Size Dia.x L (in.)	Model No.	Thread Length (in.)	Reference SPF/HF Allowable Shear Loads (lb.)								
			Wood Side Member Thickness (in.)								
			1.5	2	2.5	3	3.5	4	4.5	6	8
0.22 x 3	SDWS22300DB	1½	190	—	—	—	—	—	—	—	—
0.22 x 4	SDWS22400DB	2⅜	385	285	215	—	—	—	—	—	—
0.22 x 5	SDWS22500DB	2¾	405	290	290	290	195	—	—	—	—
0.22 x 6	SDWS22600DB	2¾	405	365	365	365	310	310	210	—	—
0.22 x 8	SDWS22800DB	2¾	405	365	365	365	310	310	280	280	—
0.22 x 10	SDWS221000DB	2¾	405	365	365	365	310	310	280	280	280

1. All applications are based on full penetration into the main member. Full penetration is the screw length minus the side member thickness.
2. Allowable loads are shown at the wood load duration factor of C_D = 1.0. Loads may be increased for load duration per the building code up to a C_D = 1.6. Tabulated values must be multiplied by all applicable adjustment factors per the NDS.
3. Minimum fastener spacing requirements to achieve table loads: 6" end distance, 1 7/16" edge distance, ⅝" between staggered rows of fasteners, 4" between non-staggered rows of fasteners and 8" between fasteners in a row.
4. For in-service moisture content greater than 19%, use C_M = 0.7.
5. Loads are based on installation into the side grain of the wood with the screw axis perpendicular to the face of the member.

C-F-2019TECHSUP ©2019 SIMPSON STRONG-TIE COMPANY INC.

Strong-Drive®
SDWS **TIMBER** Screw (cont.)

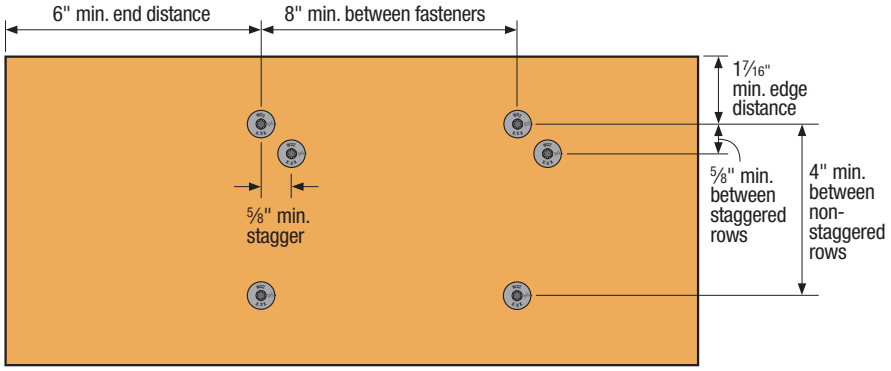

SDWS Timber Screw Spacing Requirements

SDWS Timber Screw — Allowable Withdrawal Loads — Douglas Fir–Larch, Southern Pine, Spruce-Pine-Fir and Hem-Fir Lumber

Model No.	Fastener Length (in.)	Thread Length (in.)	Reference Withdrawal Design Value, W (lb./in.)		Max. Reference Withdrawal Design Value, W_{max} (lb.)	
			DFL and SP Main Member	HF and SPF Main Member	DFL and SP Main Member	HF and SPF Main Member
SDWS22300DB	3	1½	164	151	245	225
SDWS22400DB	4	2⅜	179	160	425	380
SDWS22500DB	5	2¾	214	187	590	495
SDWS22600DB	6	2¾	214	187	590	495
SDWS22800DB	8	2¾	214	187	590	495
SDWS221000DB	10	2¾	214	187	590	495

1. The tabulated reference withdrawal design value, W, is in pounds per inch of the thread penetration into the side grain of the main member.
2. The tabulated reference withdrawal design value, W_{Max}, is in pounds where the entire thread length must penetrate into the side grain of the main member.
3. Tabulated reference withdrawal design values, W and W_{Max}, are shown at a C_D = 1.0. Loads may be increased for load duration per the building code up to a C_D = 1.6. Tabulated values must be multiplied by all applicable adjustment factors from the NDS as referenced in the IBC or IRC.
4. Embedded thread length is that portion held in the main member including the screw tip.
5. Values are based on the lesser of withdrawal from the main member or pull-through of a 1½" side member.
6. For in-service moisture content greater than 19%, use C_M = 0.7.

C-F-2019TECHSUP ©2019 SIMPSON STRONG-TIE COMPANY INC.

Strong-Drive® SDWS **TIMBER** Screw with Gypsum Board Interlayer(s)

The Strong-Drive SDWS Timber screw may be installed with one or two layers of ⅝" gypsum board. This layer of gypsum is to be located between the side member and main member for a standard connection. See the tables below for the required screw lengths and allowable loads for these applications. Loads are derived from assembly testing based on ICC-ES AC233.

SDWS Timber Screw — Douglas Fir–Larch and Southern Pine Lumber Allowable Single Shear Loads with One Layer of ⅝" Gypsum Board

Size (in.)	Model No.	Thread Length (in.)	Reference DFL/SP Allowable Shear Loads (lb.)								
			Wood Side Member Thickness (in.)								
			1.5	2.0	2.5	3.0	3.5	4.0	4.5	6.0	8.0
0.22 x 4	SDWS22400DB	2.375	265	—	—	—	—	—	—	—	—
0.22 x 5	SDWS22500DB	2.75	265	265	235	—	—	—	—	—	—
0.22 x 6	SDWS22600DB	2.75	265	265	265	265	235	—	—	—	—
0.22 x 8	SDWS22800DB	2.75	265	265	265	265	255	255	255	—	—
0.22 x 10	SDWS221000DB	2.75	265	265	265	265	255	255	255	255	—

See footnotes on next page.

SDWS Timber Screw — Douglas Fir–Larch and Southern Pine Lumber Allowable Single Shear Loads with Two Layers of ⅝" Gypsum Board

Size (in.)	Model No.	Thread Length (in.)	Reference DFL/SP Allowable Shear Loads (lb.)								
			Wood Side Member Thickness (in.)								
			1.5	2.0	2.5	3.0	3.5	4.0	4.5	6.0	8.0
0.22 x 4	SDWS22400DB	2.375	—	—	—	—	—	—	—	—	—
0.22 x 5	SDWS22500DB	2.75	265	265	—	—	—	—	—	—	—
0.22 x 6	SDWS22600DB	2.75	265	265	265	265	—	—	—	—	—
0.22 x 8	SDWS22800DB	2.75	265	265	265	265	255	255	255	—	—
0.22 x 10	SDWS221000DB	2.75	265	265	265	265	255	255	255	255	—

See footnotes on next page.

C-F-2019TECHSUP ©2019 SIMPSON STRONG-TIE COMPANY INC.

Strong-Drive® SDWS TIMBER Screw with Gypsum Board Interlayer(s) (cont.)

SDWS Timber Screw — Spruce-Pine-Fir and Hem-Fir Lumber Allowable Single Shear Loads with One Layer of ⅝" Gypsum Board

Size (in.)	Model No.	Thread Length (in.)	Reference SPF/HF Allowable Shear Loads (lb.)								
			Wood Side Member Thickness (in.)								
			1.5	2.0	2.5	3.0	3.5	4.0	4.5	6.0	8.0
0.22 x 4	SDWS22400DB	2.375	250	—	—	—	—	—	—	—	—
0.22 x 5	SDWS22500DB	2.75	260	190	190	—	—	—	—	—	—
0.22 x 6	SDWS22600DB	2.75	260	235	235	235	200	—	—	—	—
0.22 x 8	SDWS22800DB	2.75	260	235	235	235	200	200	180	—	—
0.22 x 10	SDWS221000DB	2.75	260	235	235	235	200	200	180	180	—

See notes below.

SDWS Timber Screw — Spruce-Pine-Fir and Hem-Fir Lumber Allowable Single Shear Loads with Two Layers of ⅝" Gypsum Board

Size (in.)	Model No.	Thread Length (in.)	Reference SPF/HF Allowable Shear Loads (lb.)								
			Wood Side Member Thickness (in.)								
			1.5	2.0	2.5	3.0	3.5	4.0	4.5	6.0	8.0
0.22 x 4	SDWS22400DB	2.375	—	—	—	—	—	—	—	—	—
0.22 x 5	SDWS22500DB	2.75	260	190	—	—	—	—	—	—	—
0.22 x 6	SDWS22600DB	2.75	260	235	235	235	—	—	—	—	—
0.22 x 8	SDWS22800DB	2.75	260	235	235	235	200	200	180	—	—
0.22 x 10	SDWS221000DB	2.75	260	235	235	235	200	200	180	180	—

1. All applications are based on full penetration which equals fastener length minus side member thickness.
2. Allowable loads are shown at the wood load duration factor of C_D =1.0. Loads may be increased for load duration per the building code up to a C_D =1.6. Tabulated values must be multiplied by all applicable adjustment factors per the NDS.
3. Minimum fastener spacing requirements: 6" end distance, 1 7/16" edge distance, ⅝" between staggered rows of fasteners, 4" between non-staggered rows of fasteners and 8" between fasteners in a row. Refer to SDWS Spacing Requirements figure on p. 23.
4. For in-service moisture content greater than 19% use C_M = 0.7.
5. Gypsum board must be attached as required per the building code.

C-F-2019TECHSUP ©2019 SIMPSON STRONG-TIE COMPANY INC.

Strong-Drive® SDWS FRAMING Screw

Multipurpose Wood-to-Wood Including Framing, Indoor/Outdoor Projects

The framing connections with the SDWS FRAMING screws are designed for common framing connections, per the 2015 and 2018 IRC and IBC code requirements and are based on engineering analysis.

Codes/Standards: IAPMO-UES ER-192, State of Florida FL13975

US Patent 9,523,383

For more information, see p. 52, C-F-2019 Fastening Systems Catalog

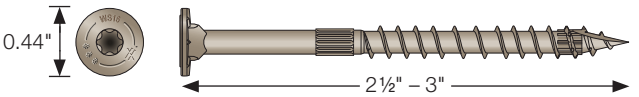

SDWS Framing Screw — Allowable Shear Loads for Sawn Lumber

Model No.	Side Member Thickness (in.)	Main Member Penetration (in.)	Reference Allowable Shear Loads (lb.)		
			SP	DFL	SPF/HF
SDWS16212	1½	0.90	131	106	99
SDWS16300	1½	1.40	229	150	150
	2	0.90	—	129	89

1. All applications are based on full penetration into the main member. Full penetration is the screw length minus the side member thickness.
2. Allowable loads are shown at the wood load duration factor of C_D = 1.0. Loads may be increased for load duration per the building code up to a C_D = 1.6. Tabulated values must be multiplied by all applicable adjustment factors per the NDS.
3. Minimum fastener spacing requirements to achieve table loads; 2" (SDWS16212) and 3" (SDWS16300) end distance, ½" (SDWS16212) and 1" (SDWS16300) edge distance, 7⁄16" between staggered rows of fasteners, 1" between non-staggered and 4" between fasteners in a row.
4. For in-service moisture content greater than 19% use C_M = 0.70.
5. Screws must be installed straight into the side grain of the wood main member with the screw axis at a 90°-angle to the wood fibers.

SDWS Framing Screw — Allowable Withdrawal Load in Sawn Lumber

Model No.	Fastener Length (in.)	Thread Length (in.)	Reference Withdrawal Design Loads, W (lb./in.)			Max. Reference Withdrawal Design Loads, W_{max} (lb.)		
			SP	DFL	SPF/HF	SP	DFL	SPF/HF
SDWS16212	2.40	1.250	177	132	103	199	149	116
SDWS16300	2.90	1.625	192	127	122	310	205	200

1. The tabulated reference withdrawal design values (W) are in pounds per inch of the thread penetration into the main member.
2. The tabulated reference withdrawal design values (W_{max}) are in pounds where the entire thread length must penetrate into the main member.
3. Tabulated reference withdrawal design values (W) and (W_{max}) are shown at a C_D = 1.0. Loads may be increased for load duration per the building code up to a C_D = 1.6. Tabulated values must be multiplied by all applicable adjustment factors from the NDS as referenced in the IBC or IRC.
4. Values are based on the lesser of withdrawal from the main member or pull-through of a 1½" side member. For in-service moisture content greater than 19% use C_M = 0.65.

SDWS Framing Screw — Allowable Shear Loads for Wood Structural Panel Side Member

Model No.	Side Member Thickness (in.)	Min. Main Member Penetration (in.)	Reference Allowable Shear Loads (lb.)		
			SP	DFL	SPF/HF
SDWS16	15⁄32	1.93	143	143	143
	23⁄32	1.68	200	187	138

1. Allowable loads are shown at the wood load duration factor of C_D=1.0. Loads may be increased for load duration per the building code up to a C_D=1.6. Tabulated loads must be multiplied by all applicable adjustment factors per the NDS.
2. WSP side members for tests was oriented strand board (equivalent specfic gravity = 0.50).
3. All applications are based on full penetration into the main member. Full penetration is the screw length minus the side member thickness.
4. Screws must be installed straight into the side grain of the wood main member with the screw axis at a 90°-angle to the wood fibers.

SDWS Framing Screw — Allowable Pull-Through Loads for Wood Structural Panel Side Member

Model No.	Side Member Thickness (in.)	Reference Allowable Pull-Through Loads (lb.)
SDWS16	15⁄32	84
	23⁄32	169

1. Allowable loads are shown at the wood load duration factor pf C_D=1.0. Loads may be increased for load duration per the building code up to a C_D=1.6. Tabulated loads must be multiplied by all applicable adjustment factors per the NDS.
2. WSP side members for tests was oriented strand board (equivalent specfic gravity = 0.50).
3. For connections with 15⁄32" and 23⁄32" thick OSB side members, the lesser of withdrawal loads from the main and pull-through loads from WSP side member shall be used in design.

C-F-2019TECHSUP ©2019 SIMPSON STRONG-TIE COMPANY INC.

Strong-Drive® SDWS FRAMING Screw (cont.)

Typical Conventional Framing Connections

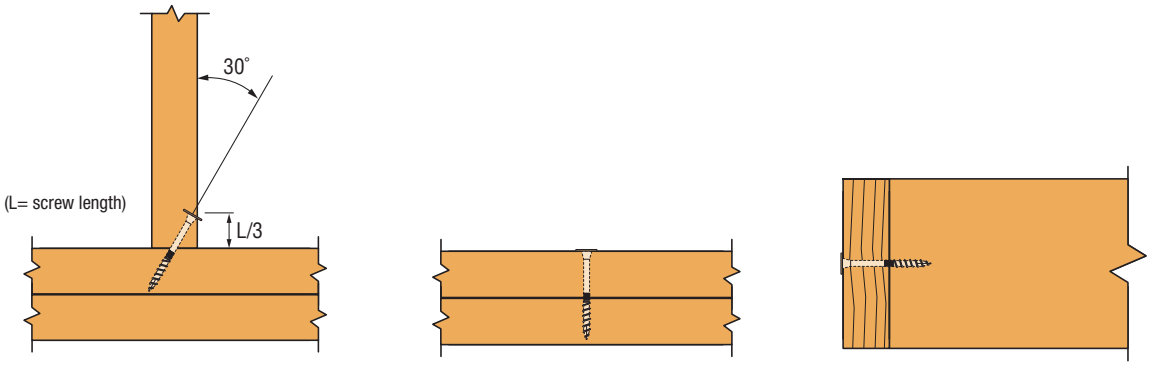

Toe Screw

Face Screw

End Screw

Strong-Drive® SDWS Framing Screw Spacing Requirements for Non-Prescriptive Construction

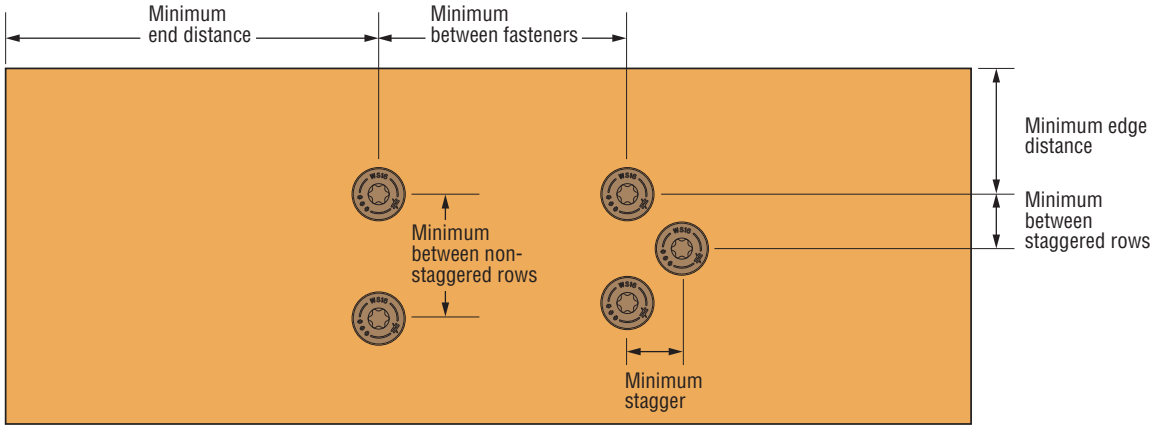

SDWS Framing Screw Spacing Requirements

Condition		Minimum Distance or Spacing (in.)	
		SDWS16212	SDWS16300
End distance	Loading toward end	2	3
	Loading away from end	2	3
	Loading perpendicular to grain	3½	4
Edge distance	Loading parallel to grain	½	1
	Loading perpendicular to grain	1	1
Spacing between fasteners in a row	Loading parallel to grain	2	2
	Loading perpendicular to grain	2	2
Spacing between rows	In-line rows*	1	1
	Staggered rows	7/16	7/16

*Table loads must be multiplied by adjustment factors of 0.93 (SDWS16212) and 0.91 (SDWS16300).

C-F-2019TECHSUP ©2019 SIMPSON STRONG-TIE COMPANY INC.

Strong-Drive® SDWS FRAMING Screw (cont.)

Walls

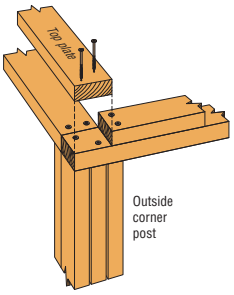

Double Top Plate at Corners

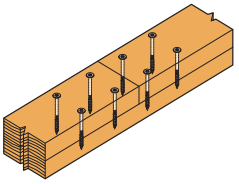

Double Top Plate Laps (Face Screw)

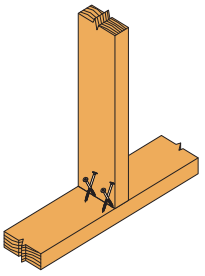

Stud to Sole Plate (Toe Screw)

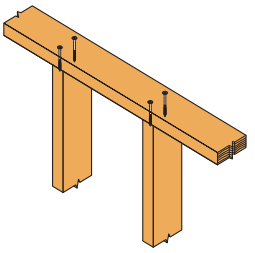

Top or Sole Plate to Stud (End Screw)

Connection Application	Fastener Quantities			
	IRC		IBC	
	Nails per Table R602.3 (1)	Equivalent SDWS Framing Screws	Nails per Table 2304.10.1	Equivalent SDWS Framing Screws
Top or sole plate to stud (end screw)	(2) 16d box	(2) SDWS16212	(2) 16d common	(2) SDWS16300
Stud to sole plate (toe screw)	(2) 16d box	(2) SDWS16212	(4) 8d common	(4) SDWS16212
Double top plate laps (face screw)	(8) 16d box	(8) SDWS16212	(8) 16d common	(8) SDWS16300
Double top plate at corners and intersections (face screw)	(2) 10d box	(2) SDWS16212	(2) 16d common	(2) SDWS16212
Double studs (face screw)	10d box 24" o.c.	SDWS16212 24" o.c.	16d box 24" o.c.	SDWS16300 24" o.c.

Ceiling

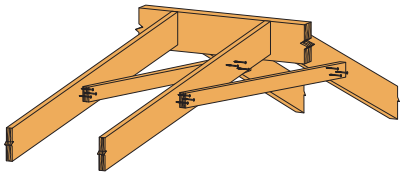

Collar Tie to Rafter (Face Screw)

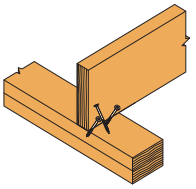

Ceiling Joist to Plate (Toe Screw)

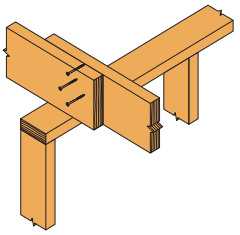

Ceiling Joist, Laps Over Partitions (Face Screw)

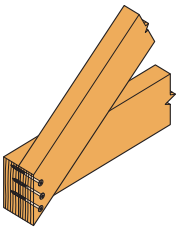

Ceiling Joist to Parallel Rafter (Face Screw)

Connection Application	Fastener Quantities			
	IRC		IBC	
	Nails per Table R602.3 (1) and R802.5.2	Equivalent SDWS Framing Screws	Nails per Table 2304.10.1	Equivalent SDWS Framing Screws
Ceiling joist to plate (toe screw)	(3) 8d box	(3) SDWS16212	(3) 8d common	(3) SDWS16212
Ceiling joists, lap over partitions (face screw)	(3 min*) 10d box	(3 min*) SDWS16212	(3 min*) 16d common	(3 min*) SDWS16300
Collar tie to rafter (face screw)	(3) 10d box	(3) SDWS16212	(3) 10d common	(3) SDWS16300
Ceiling joist to parallel rafters (face screw)	(3) 16d common*	(3) SDWS16300*	(3 min*) 16d common	(3 min*) SDWS16300

*Quantities vary based on project conditions. The SDWS16300 is a 1-for-1 replacement for 16d common nails.

C-F-2019TECHSUP ©2019 SIMPSON STRONG-TIE COMPANY INC.

Strong-Drive® SDWS FRAMING Screw (cont.)

Roof

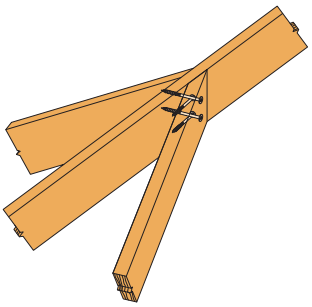

Jack Rafter to Hip (Toe Screw)

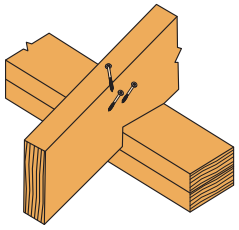

Roof Rafter to Plate (Toe Screw)

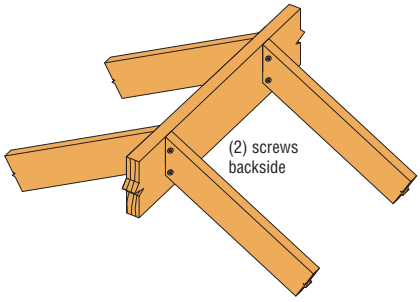

Roof Rafter to 2x Ridge Board (Toe Screw)

Connection Application	Fastener Quantities			
	IRC		IBC	
	Nails per Table R602.3 (1)	Equivalent SDWS Framing Screws	Nails per Table 2304.10.1	Equivalent SDWS Framing Screws
Roof rafter to plate (toe screw)	(3) 10d common	(3) SDWS16212	(3) 8d common	(3) SDWS16212
Roof rafter to 2x ridge board (toe screw)	(4) 16d box	(4) SDWS16212	(2) 16d common	(2) SDWS16300
Jack rafter to hip (toe screw)	(4) 16d box	(4) SDWS16212	(3) 10d common	(3) SDWS16300

Floor

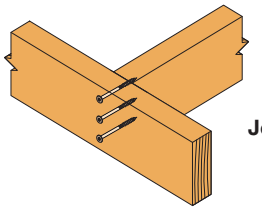

Joist to Rim Board (End Screw)

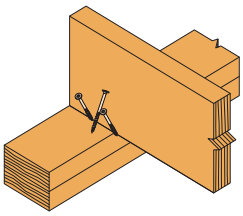

Joist to Sill or Girder (Toe Screw)

Connection Application	Fastener Quantities			
	IRC		IBC	
	Nails per Table R602.3 (1)	Equivalent SDWS Framing Screws	Nails per Table 2304.10.1	Equivalent SDWS Framing Screws
Joist to band joist (end screw)	(3) 16d common end nail	(3) SDWS16300	(3) 16d common	(3) SDWS16300
Joist to sill or girder (toe screw)	(3) 8d box	(3) SDWS16212	(3) 8d common	(3) SDWS16212

Beam

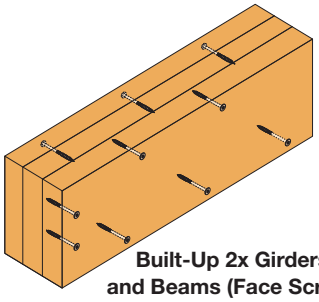

Built-Up 2x Girders and Beams (Face Screw)

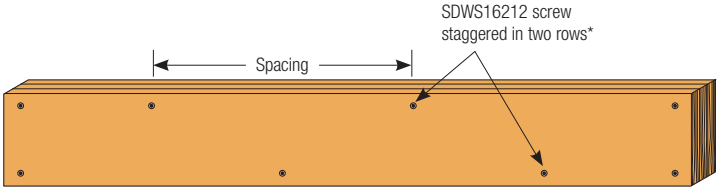

Beam Assembly Detail*

Connection Application	Fastener Quantities and Spacing			
	IRC		IBC	
	Nails per Table R602.3 (1)	Equivalent SDWS Framing Screws	Nails per Table 2304.10.1	Equivalent SDWS Framing Screws
Built-up 2x girders and beams (face screw)	10d box 32" o.c. (24" o.c. per 2015)	SDWS16212 32" o.c.	10d box 24" o.c.	SDWS16212 24" o.c.

*Fastening pattern shown applies to each ply of the built-up 2x beam.

C-F-2019TECHSUP ©2019 SIMPSON STRONG-TIE COMPANY INC.

Strong-Drive®
DWP WOOD SS Screw

High- to Severe-Exposure Wood Decking Applications, Indoor/Outdoor Projects

The #12 and #14 Strong-Drive DWP Wood SS flat-head screws are structural fasteners that have been tested in accordance with ICC-ES acceptance criteria AC233 and are load rated for shear, pull-through and withdrawal resistance. They are a great solution for exterior structural connections, such as on docks, boardwalks and decks near water or where they will be exposed to high or severe corrosion.

For more information, see p. 62, C-F-2019 Fastening Systems Catalog

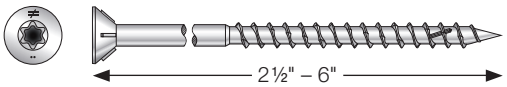

DWP WOOD SS Screw — Allowable Shear Loads

Size x L (in.)	Model No.	Thread Length (in.)	Reference DFL/SP Allowable Shear Loads (lb.)							Reference SPF/HF Allowable Shear Loads (lb.)						
			Side Member Thickness (in.)							Side Member Thickness (in.)						
			1.5	2	2.5	3	3.5	4	4.5	1.5	2	2.5	3	3.5	4	4.5
#12 x 2½	T12250WP, S12250WP	2.0	140	—	—	—	—	—	—	105	—	—	—	—	—	—
#12 x 3	T12300WP, S12300WP	2.2	185	—	—	—	—	—	—	135	—	—	—	—	—	—
#12 x 3½	T12350WP, S12350WP	2.5	205	190	—	—	—	—	—	160	160	—	—	—	—	—
#12 x 4	T12400WP, S12400WP	2.8	205	205	205	—	—	—	—	160	160	160	—	—	—	—
#12 x 4½	T12450WP, S12450WP	3.2	205	205	205	205	—	—	—	160	160	160	160	—	—	—
#12 x 5	T12500WP, S12500WP	3.5	205	205	205	205	205	—	—	160	160	160	160	160	—	—
#12 x 6	T12600WP, S12600WP	4.0	205	205	205	205	205	180	180	160	160	160	160	160	150	150
#14 x 3	T14300WP, S14300WP	2.1	220	—	—	—	—	—	—	170	—	—	—	—	—	—
#14 x 3½	T14350WP, S14350WP	2.3	230	220	—	—	—	—	—	180	180	—	—	—	—	—
#14 x 4	T14400WP, S14400WP	2.8	230	220	220	—	—	—	—	180	180	175	—	—	—	—
#14 x 5	T14500WP, S14500WP	3.5	230	220	220	220	220	—	—	180	180	175	175	165	—	—
#14 x 6	T14600WP, S14600WP	4.2	230	220	220	220	210	210	210	180	180	175	175	165	165	165

1. All applications are based on full penetration into the main member. Full penetration is the screw length minus the side member thickness.
2. Allowable loads are shown at the wood load duration factor of C_D = 1.0. Loads may be increased for load duration per the building code up to a C_D = 1.6.
3. Tabulated values must be multiplied by all applicable adjustment factors per the NDS.
4. For in-service moisture content greater than 19%, use C_M = 0.7.
5. The tabulated loads are applicable to Type 305 and Type 316 stainless-steel flat-head screw model numbers.
6. Loads are based on installation into the side grain of the wood with the screw axis perpendicular to the face of the member.
7. Minimum fastener spacing requirements to achieve loads: 6" end distance, 1 7/16" edge distance.
8. The above loads are based on tests of connections with main and side members of the same species.

C-F-2019TECHSUP ©2019 SIMPSON STRONG-TIE COMPANY INC.

Strong-Drive®
DWP **WOOD SS** Screw (cont.)

DWP WOOD SS Screw — Allowable Withdrawal and Pull-Through Loads

Size x L (in.)	Model No.	Thread Length (in.)	Head Dia. (in.)	Allowable Screw Tension (lb.)	Reference Withdrawal, W (lb./in.)		Reference Pull-Through for 1½" Side Member, P (lb.)	
					DFL/SP	SPF/HF	DFL/SP	SPF/HF
#12 x 2½	T12250WP, S12250WP	2.00	0.44	605	130	100	180	150
#12 x 3	T12300WP, S12300WP	2.16						
#12 x 3½	T12350WP, S12350WP	2.49						
#12 x 4	T12400WP, S12400WP	2.83						
#12 x 4½	T12450WP, S12450WP	3.16						
#12 x 5	T12500WP, S12500WP	3.49						
#12 x 6	T12600WP, S12600WP	4.00						
#14 x 3	T14300WP, S14300WP	2.05	0.46	775	145	100	200	155
#14 x 3½	T14350WP, S14350WP	2.25						
#14 x 4	T14400WP, S14400WP	2.83						
#14 x 5	T14500WP, S14500WP	3.49						
#14 x 6	T14600WP, S14600WP	4.16						

1. The tabulated allowable screw tension value is the tensile strength of the steel screw and may not be multiplied by any adjustment factors.
2. The tabulated reference withdrawal design value, W, is in pounds per inch of the thread penetration into the side grain of the main member
3. The tabulated reference pull-through design value, P, is the allowable load for the fastener head pull-through for a minimum 1½"-thick side member.
4. Tabulated reference withdrawal and pull-through design values, W and P, are shown at a load duration factor, C_D, = 1.0 and a wet service factor, C_M, = 1.0. Loads may be increased for load duration per the building code up to a C_D = 1.6. Tabulated values must be multiplied by all applicable adjustment factors from the NDS as referenced in the IBC or IRC.
5. Embedded thread length is that portion held in the main member including the screw point.
6. For in-service moisture content greater than 19%, use C_M = 0.7.

C-F-2019TECHSUP ©2019 SIMPSON STRONG-TIE COMPANY INC.

Strong-Drive® SDWS TIMBER SS Screw

Structural Wood and Engineered Wood Connections Including Docks, Piers, Boardwalks and Ledgers, Applications Requiring High to Severe Corrosion Resistance

Deisgned to provide an easy-to-install, low-torque driving, high-strength, severe-corrosion resistant alternatives to through bolting, traditional lags and spikes. The Strong-Drive SDWS Timber SS screw is a premium solution for heavy-duty structural applications. Type 316 stainless steel provides severe-corrosion resistance, making it suitable for exterior and preservative-treated wood applications.

US Patent 9,523,383

For more information, see p. 54, C-F-2019 Fastening Systems Catalog

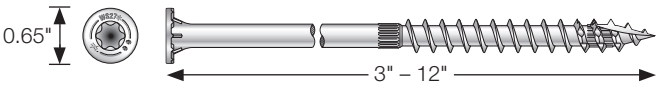

SDWS Timber SS — Allowable Shear Loads — Douglas Fir-Larch, Southern Pine Lumber

Size (dia. x length) (in.)	Model No.	Thread Length (in.)	Reference DFL/SP Allowable Shear Loads (lb.) Wood Side Member Thickness (in.)								Reference Withdrawal Design Value, W (lb./in.)	Reference Withdrawal Design Value, W_{max} (lb.)
			1.5	2.5	3	3.5	4.5	6	8	10		
0.276 x 3	SDWS27300SS	2	225	—	—	—	—	—	—	—	222	410
0.276 x 4	SDWS27400SS	3	375	225	—	—	—	—	—	—	204	410
0.276 x 5	SDWS27500SS	3	375	335	310	210	—	—	—	—	204	410
0.276 x 6	SDWS27600SS	3	375	335	335	335	210	—	—	—	204	410
0.276 x 8	SDWS27800SS	3	375	415	485	440	335	275	—	—	204	410
0.276 x 10	SDWS271000SS	3	375	415	485	440	335	275	275	—	204	410
0.276 x 12	SDWS271200SS	3	375	415	485	440	335	275	275	275	204	410

See footnotes below.

SDWS Timber SS — Allowable Shear Loads — Hem-Fir, Spruce-Pine-Fir Lumber

Size (dia. x length) (in.)	Model No.	Thread Length (in.)	Reference HF/SPF Allowable Shear Loads (lb.) Wood Side Member Thickness (in.)								Reference Withdrawal Design Value, W (lb./in.)	Reference Withdrawal Design Value, W_{max} (lb.)
			1.5	2.5	3	3.5	4.5	6	8	10		
0.276 x 3	SDWS27300SS	2	210	—	—	—	—	—	—	—	182	365
0.276 x 4	SDWS27400SS	3	325	180	—	—	—	—	—	—	200	385
0.276 x 5	SDWS27500SS	3	325	285	235	175	—	—	—	—	200	385
0.276 x 6	SDWS27600SS	3	325	285	285	285	175	—	—	—	200	385
0.276 x 8	SDWS27800SS	3	325	350	390	465	280	240	—	—	200	385
0.276 x 10	SDWS271000SS	3	325	350	390	465	280	240	240	—	200	385
0.276 x 12	SDWS271200SS	3	325	350	390	465	280	240	240	240	200	385

1. All applications are based on full penetration into the main member. Full penetration is the screw length minus the side member thickness.
2. Allowable loads are shown at the wood load duration factor of C_D = 1.0. Loads may be increased for load duration per the building code up to a C_D = 1.6. Tabulated values must be multiplied by all applicable adjustment factors per the NDS.
3. Minimum fastener spacing requirements to achieve table loads: 6" end distance, 1½" edge distance, ¾" between staggered rows of fasteners, 4" between non-staggered rows of fasteners and 6" between fasteners in a row.
4. For in-service moisture content greater than 19%, use C_M = 0.7.
5. Loads are based on installation into the side grain of the wood with the screw axis perpendicular to the face of the member.
6. The tabulated reference withdrawal design value, W, is in pounds per inch of the thread penetration into the side grain of the main member.
7. The tabulated reference withdrawal design value, W_{max}, is in pounds where the entire thread length must penetrate into the side grain of the main member.
8. Embedded thread length is that portion held in the main member including the screw point.
9. Values are based on the lesser of withdrawal from the main member or pull-through of a 1½" side member.

C-F-2019TECHSUP ©2019 SIMPSON STRONG-TIE COMPANY INC.

Strong-Drive® SDWS LOG Screw

Log Building Construction and General Interior Applications

Codes/Standards: IAPMO-UES ER-192, State of Florida FL13975

US Patent: 9,523,383

For more information, see p. 83, C-F-2019 Fastening Systems Catalog

SDWS Log — Allowable Shear Loads Douglas Fir–Larch and Southern Pine

Size (dia. x length) (in.)	Model No.	Thread Length (in.)	Reference DFL/SP Allowable Shear Loads (lb.) Wood Side Member Thickness (in.)														
			1.5	2	2.5	3	3.5	4	4.5	5	5.5	6	7	8	9	10	13
0.195 x 6	SDWS19600	2.75	370	265	265	265	265	245	245	—	—	—	—	—	—	—	—
0.195 x 7.5	SDWS19712	2.75	370	265	265	265	265	245	245	245	245	245	—	—	—	—	—
0.220 x 8	SDWS22800	2.75	405	405	405	405	395	395	395	395	395	395	—	—	—	—	—
0.220 x 9	SDWS22900	2.75	405	405	405	405	395	395	395	395	395	395	395	—	—	—	—
0.220 x 10	SDWS221000	2.75	405	405	405	405	395	395	395	395	395	395	395	395	—	—	—
0.220 x 11	SDWS221100	2.75	405	405	405	405	395	395	395	395	395	395	395	395	395	—	—
0.220 x 12	SDWS221200	2.75	405	405	405	405	395	395	395	395	395	395	395	395	395	395	—
0.220 x 15	SDWS221500	2.75	405	405	405	405	395	395	395	395	395	395	395	395	395	395	395

SDWS Log — Allowable Shear Loads Spruce-Pine-Fir and Hem-Fir

Size (dia. x length) (in.)	Model No.	Thread Length (in.)	Reference SPF/HF Allowable Shear Loads (lb.) Wood Side Member Thickness (in.)														
			1.5	2	2.5	3	3.5	4	4.5	5	5.5	6	7	8	9	10	13
0.195 x 6	SDWS19600	2.75	350	265	265	265	265	215	180	—	—	—	—	—	—	—	—
0.195 x 7.5	SDWS19712	2.75	350	265	265	265	265	215	215	215	215	180	—	—	—	—	—
0.220 x 8	SDWS22800	2.75	400	365	365	365	310	310	280	280	280	280	—	—	—	—	—
0.220 x 9	SDWS22900	2.75	400	365	365	365	310	310	280	280	280	280	280	—	—	—	—
0.220 x 10	SDWS221000	2.75	400	365	365	365	310	310	280	280	280	280	280	280	—	—	—
0.220 x 11	SDWS221100	2.75	400	365	365	365	310	310	280	280	280	280	280	280	280	—	—
0.220 x 12	SDWS221200	2.75	400	365	365	365	310	310	280	280	280	280	280	280	280	280	—
0.220 x 15	SDWS221500	2.75	400	365	365	365	310	310	280	280	280	280	280	280	280	280	280

1. Design values are based on full fastener embedment and the adjacent members are in contact with each other.
2. Allowable loads are shown at the wood load duration factor of C_D = 1.0. Loads may be increased for load duration up to a C_D = 1.6.
3. Tabulated values must be multiplied by all applicable adjustment factors per the NDS.
4. Minimum fastener spacing requirements: 6" end distance, 1 7/16" edge distance, 5/8" between staggered rows of fasteners, 4" between non-staggered rows of fasteners and 8" between fasteners in a row.
5. Loads are for in-service moisture content less than or equal to 19% (C_M=1.0).
6. Loads are based on installation into the side grain of the wood member with the screw axis perpendicular to the face of the wood member.

SDWS Log — Allowable Withdrawal Loads Douglas Fir–Larch, Southern Pine, Spruce-Pine-Fir and Hem-Fir Lumber

Size (dia. x length) (in.)	Model No.	Fastener Length (in.)	Thread Length (in.)	Reference Withdrawal Design Value, W (lb./in.)		Maximum Reference Withdrawal Design Value, W_{max} (lb.)	
				DFL and SP Main Member	HF and SPF Main Member	DFL and SP Main Member	HF and SPF Main Member
0.195 x 6	SDWS19600	6	2.75	197	164	545	395
0.195 x 7.5	SDWS19712	7.5	2.75	197	164	545	395
0.220 x 8	SDWS22800	8	2.75	214	187	590	495
0.220 x 9	SDWS22900	9	2.75	214	187	590	495
0.220 x 10	SDWS221000	10	2.75	214	187	590	495
0.220 x 11	SDWS221100	11	2.75	214	187	590	495
0.220 x 12	SDWS221200	12	2.75	214	187	590	495
0.220 x 15	SDWS221500	15	2.75	214	187	590	495

1. The tabulated reference withdrawal design value, W, is in pounds per inch of the thread penetration into the side grain of the main member.
2. The tabulated reference withdrawal design value, W_{max}, is in pounds where the entire thread must penetrate into the side grain of the main member.
3. Tabulated reference withdrawal design values (C_D=1.0), W and W_{max}, must be multiplied by all applicable adjustment factors from the NDS as referenced in the IBC or IRC.
4. Embedded thread length is that portion held in the main member including the screw point.
5. Values are based on the lesser of withdrawal from the main member or pull-through of a 1.5" side member.
6. Loads are for in-service moisture content less than or equal to 19% (C_M=1.0).

C-F-2019TECHSUP ©2019 SIMPSON STRONG-TIE COMPANY INC.

Strong-Drive® SDWS **LOG** Screw (cont.)

Allowable Loads for Strong-Drive SDWS LOG Screws with Expanded Specific Gravity Options

Allowable load tables on the following pages provide shear and withdrawal capacities for wood species with an assigned specific gravity of 0.35 to 0.41. Wood species with a specific gravity within this range are provided below.

Wood Species Combinations in the Specific Gravity Range 0.35 to 0.41

Wood Species	Specific Gravity[1]
Alaska Spruce	0.41
Aspen	0.39
Balsam Fir	0.36
Coast Sitka Spruce	0.39
Cottonwood	0.41
Eastern Hemlock	0.41
Eastern Hemlock-Balsam Fir	0.36
Eastern Hemlock-Tamarack	0.41
Eastern Softwoods	0.36
Eastern Spruce	0.41
Eastern White Pine	0.36
Engelmann Spruce-Lodgepole Pine	0.38
Northern Species	0.35
Redwood, open grain	0.37
Spruce-Pine-Fir (South)	0.36
Western Cedars	0.36
Western Cedars (North)	0.35
Western White Pine	0.40
Western Woods	0.36

1. Specific gravity as assigned in NDS-18 Table 12.3.3A.

C-F-2019TECHSUP ©2019 SIMPSON STRONG-TIE COMPANY INC.

Strong-Drive® SDWS **LOG** Screw (cont.)

SDWS Log — Allowable Lateral Loads in the Specific Gravity Range 0.35 to 0.41

Size (dia. x length) (in.)	Model No.	Thread Length (in.)	Reference Allowable Lateral Design Value (lb.)													
			Wood Side Member Thickness (in.)													
			1.5	2	2.5	3	3.5	4	5	5.5	6	7	8	9	10	13
0.195 x 6	SDWS19600	2.75	330	230	230	230	230	230	—	—	—	—	—	—	—	—
0.195 x 7.5	SDWS19712	2.75	330	230	230	230	230	230	230	230	—	—	—	—	—	—
0.220 x 8	SDWS22800	2.75	350	240	240	240	240	240	240	240	240	—	—	—	—	—
0.220 x 9	SDWS22900	2.75	350	240	240	240	240	240	240	240	240	240	—	—	—	—
0.220 x 10	SDWS221000	2.75	350	240	240	240	240	240	240	240	240	240	240	—	—	—
0.220 x 11	SDWS221100	2.75	350	240	240	240	240	240	240	240	240	240	240	240	—	—
0.220 x 12	SDWS221200	2.75	350	240	240	240	240	240	240	240	240	240	240	240	240	—
0.220 x 15	SDWS221500	2.75	350	240	240	240	240	240	240	240	240	240	240	240	240	240

1. Design values are based on full fastener embedment and the adjacent members are in contact with each other.
2. Allowable loads are shown at the wood load duration factor of $C_D = 1.0$. Loads may be increased for load duration per the building code up to a $C_D = 1.6$. Tabulated values must be multiplied by all applicable adjustment factors per the NDS.
3. Minimum fastener spacing requirements: 6" end distance, 1 7/16" edge distance, 5/8" between staggered rows of fasteners, 4" between non-staggered rows of fasteners and 8" between fasteners in a row.
4. For in-service moisture content less than or equal to 19% (C_M=1.0).
5. The load tables are based on testing in accordance with ICC-ES AC233, with an applied factor of safety of 5.0.

SDWS Log — Allowable Withdrawal Loads in the Specific Gravity Range 0.35 to 0.41

Size (dia. x length) (in.)	Model No.	Thread Length (in.)	Reference Withdrawal Design Value, W (lb./in.)	Maximum Reference Withdrawal Design Value, W_{max} (lb.)[5]
0.195 x 6	SDWS19600	2.75	100	280
0.195 x 7.5	SDWS19712	2.75	100	280
0.220 x 8	SDWS22800	2.75	130	360
0.220 x 9	SDWS22900	2.75	130	360
0.220 x 10	SDWS221000	2.75	130	360
0.220 x 11	SDWS221100	2.75	130	360
0.220 x 12	SDWS221200	2.75	130	360
0.220 x 15	SDWS221500	2.75	130	360

1. The tabulated reference withdrawal design value, W, is in pounds per inch of the thread penetration into the side grain of the main member.
2. The tabulated reference withdrawal design value, W_{max}, is in pounds where the entire thread must penetrate into the side grain of the main member.
3. Tabulated reference withdrawal design values, W and W_{max}, are shown at the wood load duration factor of $C_D = 1.0$. Loads may be increased for load duration per the building code up to a $C_D = 1.6$. Tabulated values must be multiplied by all applicable adjustment factors per the NDS as referenced in the IBC or IRC.
4. Embedded thread length is that portion held in the main member including the screw point.
5. Values are based on the lesser of withdrawal from the main member or pull-through of a 1.5" side member.
6. For in-service moisture content less than or equal to 19% (C_M=1.0).
7. The load tables are based on testing in accordance with ICC-ES AC233, with an applied factor of safety of 5.0.

C-F-2019TECHSUP ©2019 SIMPSON STRONG-TIE COMPANY INC.

Strong-Drive® SDWH TIMBER-HEX Screw

Structural Wood-to-Wood Connections Including Ledgers, Indoor/Outdoor Projects

Double-barrier coating provides corrosion resistance equivalent to hot-dip galvanization, making it suitable for certain exterior and preservative-treated wood applications, as described in the evaluation report.

Codes/Standards: IAPMO-UES ER-192, State of Florida FL13975
US Patent 9,523,383
For more information, see p. 55, C-F-2019 Fastening Systems Catalog

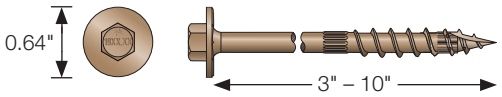

SDWH — Allowable Shear Loads — Douglas Fir–Larch and Southern Pine Lumber

Size (dia. x length) (in.)	Model No.	Thread Length (in.)	Reference DFL/SP Allowable Shear Loads (lb.)								
			Wood Side Member Thickness (in.)								
			1.5	2	2.5	3	3.5	4	4.5	6	8
0.195 x 3	SDWH19300DB	1½	285	—	—	—	—	—	—	—	—
0.195 x 4	SDWH19400DB	2⅜	370	300	300	—	—	—	—	—	—
0.195 x 6	SDWH19600DB	2¾	370	265	265	265	265	245	245	—	—
0.195 x 8	SDWH19800DB	2¾	370	265	265	265	265	265	260	245	—
0.195 x 10	SDWH191000DB	2¾	370	265	265	265	265	265	260	260	245

See footnotes below.

SDWH — Allowable Shear Loads — Spruce-Pine-Fir and Hem-Fir Lumber

Size (dia. x length) (in.)	Model No.	Thread Length (in.)	Reference SPF/HF Allowable Shear Loads (lb.)								
			Wood Side Member Thickness (in.)								
			1.5	2	2.5	3	3.5	4	4.5	6	8
0.195 x 3	SDWH19300DB	1½	230	—	—	—	—	—	—	—	—
0.195 x 4	SDWH19400DB	2⅜	330	235	195	—	—	—	—	—	—
0.195 x 6	SDWH19600DB	2¾	350	265	265	265	265	215	180	—	—
0.195 x 8	SDWH19800DB	2¾	350	265	265	265	265	265	215	215	—
0.195 x 10	SDWH191000DB	2¾	350	265	265	265	265	265	250	250	215

1. All applications are based on full penetration into the main member. Full penetration is the screw length minus the side member thickness.
2. Allowable loads are shown at the wood load duration factor of C_D = 1.0. Loads may be increased for load duration per the building code up to a C_D = 1.6. Tabulated values must be multiplied by all applicable adjustment factors per the NDS.
3. Minimum fastener spacing requirements to achieve table loads: 6" end distance, 1 7/16" edge distance, ⅝" between staggered rows of fasteners, 4" between non-staggered rows of fasteners and 8" between fasteners in a row.
4. For in-service moisture content greater than 19%, use C_M = 0.7.
5. Loads are based on installation into the side grain of the wood with the screw axis perpendicular to the face of the member.

C-F-2019TECHSUP ©2019 SIMPSON STRONG-TIE COMPANY INC.

Strong-Drive®
SDWH TIMBER-HEX Screw (cont.)

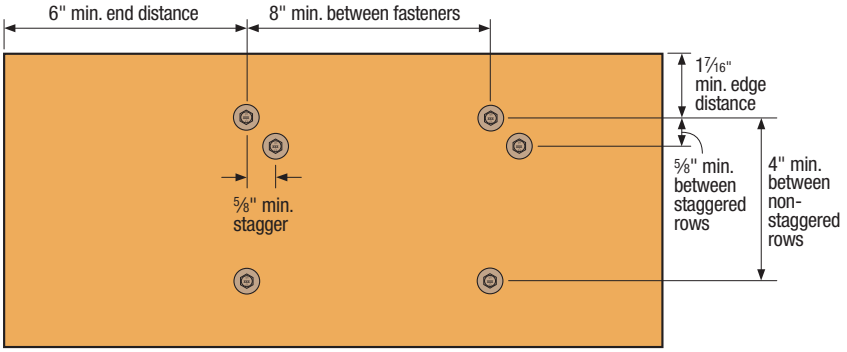

SDWH Spacing Requirements

SDWH — Allowable Withdrawal Loads — Douglas Fir–Larch, Southern Pine, Spruce-Pine-Fir and Hem-Fir Lumber

Size (dia. x length) (in.)	Model No.	Fastener Length (in.)	Thread Length (in.)	Reference Withdrawal Design Value, W (lb./in.)		Max. Reference Withdrawal Design Value, W_{max} (lb.)	
				DFL and SP Main Member	HF and SPF Main Member	DFL and SP Main Member	HF and SPF Main Member
0.195 x 3	SDWH19300DB	3	1½	177	120	265	180
0.195 x 4	SDWH19400DB	4	2⅜	192	147	455	350
0.195 x 6	SDWH19600DB	6	2¾	197	164	545	445
0.195 x 8	SDWH19800DB	8	2¾	197	164	545	445
0.195 x 10	SDWH191000DB	10	2¾	197	164	545	445

1. The tabulated reference withdrawal design value, W, is in pounds per inch of the thread penetration into the side grain of the main member.
2. The tabulated reference withdrawal design value, W_{Max}, is in pounds where the entire thread length must penetrate into the side grain of the main member.
3. Tabulated reference withdrawal design values, W and W_{Max}, are shown at a C_D = 1.0. Loads may be increased for load duration per the building code up to a C_D = 1.6. Tabulated values must be multiplied by all applicable adjustment factors from the NDS as referenced in the IBC or IRC.
4. Embedded thread length is that portion held in the main member including the screw point.
5. Values are based on the lesser of withdrawal from the main member or pull-through of a 1½" side member.
6. For in-service moisture content greater than 19%, use C_M = 0.7.

C-F-2019TECHSUP ©2019 SIMPSON STRONG-TIE COMPANY INC.

Strong-Drive®
SDWH **TIMBER-HEX** Screw with Gypsum Board Interlayer(s)

The Strong-Drive SDWH Timber-Hex screw may be installed with one or two layers of ⅝" gypsum board. This layer of gypsum is to be located between the side member and the main member for a standard connection. See table for the required screw lengths and allowable loads for these applications. Loads are derived from assembly testing based on ICC-ES AC233.

SDWH Timber-Hex Screw — Douglas Fir–Larch and Southern Pine Lumber Allowable Single Shear Loads with One Layer of ⅝" Gypsum Board

Size (in.)	Model No.	Thread Length (in.)	Reference DFL/SP Allowable Shear Loads (lb.)								
			Wood Side Member Thickness (in.)								
			1.5	2.0	2.5	3.0	3.5	4.0	4.5	6.0	8.0
0.19 x 4	SDWH19400DB	2.375	240	—	—	—	—	—	—	—	—
0.19 x 6	SDWH19600DB	2.75	240	170	170	170	170	—	—	—	—
0.19 x 8	SDWH19800DB	2.75	240	170	170	170	170	170	170	—	—
0.19 x 10	SDWH191000DB	2.75	240	170	170	170	170	170	170	170	—

See notes on following page.

SDWH Timber-Hex Screw — Douglas Fir–Larch and Southern Pine Lumber Allowable Single Shear Loads with Two Layers of ⅝" Gypsum Board

Size (in.)	Model No.	Thread Length (in.)	Reference DFL/SP Allowable Shear Loads (lb.)								
			Wood Side Member Thickness (in.)								
			1.5	2.0	2.5	3.0	3.5	4.0	4.5	6.0	8.0
0.19 x 4	SDWH19400DB	2.375	—	—	—	—	—	—	—	—	—
0.19 x 6	SDWH19600DB	2.75	240	170	170	170	—	—	—	—	—
0.19 x 8	SDWH19800DB	2.75	240	170	170	170	170	170	170	—	—
0.19 x 10	SDWH191000DB	2.75	240	170	170	170	170	170	170	170	—

See notes on following page.

SDWH Timber-Hex Screw — Spruce-Pine-Fir and Hem-Fir Lumber Allowable Single Shear Loads with One Layer of ⅝" Gypsum Board

Size (in.)	Model No.	Thread Length (in.)	Reference SPF/HF Allowable Shear Loads (lb.)								
			Wood Side Member Thickness (in.)								
			1.5	2.0	2.5	3.0	3.5	4.0	4.5	6.0	8.0
0.19 x 4	SDWH19400DB	2.375	215	—	—	—	—	—	—	—	—
0.19 x 6	SDWH19600DB	2.75	230	170	170	170	170	—		—	—
0.19 x 8	SDWH19800DB	2.75	230	170	170	170	170	170	140	—	—
0.19 x 10	SDWH191000DB	2.75	230	170	170	170	170	170	165	165	—

See notes on following page.

C-F-2019TECHSUP ©2019 SIMPSON STRONG-TIE COMPANY INC.

Strong-Drive®
SDWH **TIMBER-HEX** Screw with Gypsum Board Interlayer(s) (cont.)

SDWH Timber-Hex Screw — Spruce-Pine-Fir and Hem-Fir Lumber Allowable Single Shear Loads with Two Layers of ⅝" Gypsum Board

Size (in.)	Model No.	Thread Length	Reference SPF/HF Allowable Shear Loads (lb.)								
			Wood Side Member Thickness (in.)								
			1.5	2.0	2.5	3.0	3.5	4.0	4.5	6.0	8.0
0.19 x 4	SDWH19400DB	2.375	215	—	—	—	—	—	—	—	—
0.19 x 6	SDWH19600DB	2.75	230	170	170	170	—	—	—	—	—
0.19 x 8	SDWH19800DB	2.75	230	170	170	170	170	170	140	—	—
0.19 x 10	SDWH191000DB	2.75	230	170	170	170	170	170	165	165	—

1. All applications are based on full penetration which equals fastener length minus member thickness.
2. Allowable loads are shown at the wood load duration factor of C_D =1.0. Loads may be increase for load duration per the building code up to a C_D =1.6. Tabulated values must be multiplied by all applicable adjustment factors per the NDS.
3. Minimum fastener spacing requirements: 6" end distance, 1 7/16" edge distance, ⅝" between staggered rows of fasteners, 4" between non-staggered rows of fasteners and 8" between fasteners in a row. See figure below.
4. For in-service moisture content greater than 19% use C_M = 0.7.
5. Gypsum board must be attached as required per the building code.

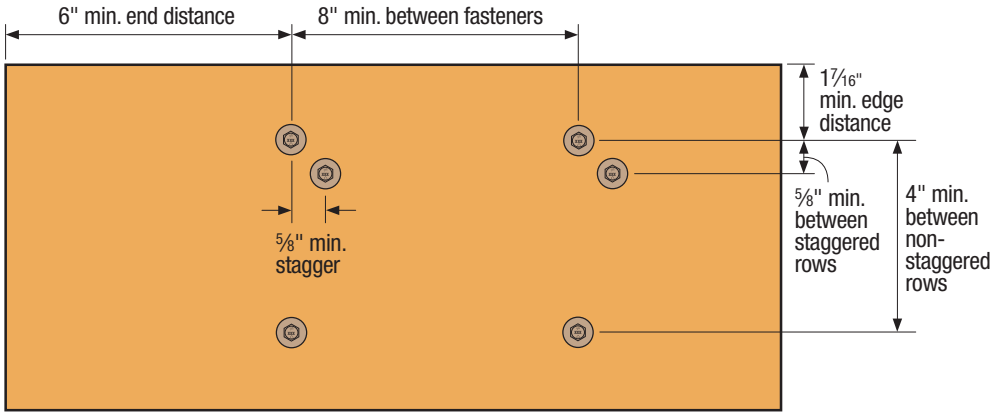

Spacing Requirements

C-F-2019TECHSUP ©2019 SIMPSON STRONG-TIE COMPANY INC.

Strong-Drive®
SDWH TIMBER-HEX HDG Screw

Structural Wood-to-Wood Connections, Indoor/Outdoor Projects, Applications Requiring High to Severe Corrosion Resistance

The Strong-Drive line of structural screws includes a 0.276"-diameter hot-dip galvanized screw suitable for heavy-duty marine and coastal applications. The SDWH Timber-Hex HDG screw has a SawTooth™ point and oversized integral washer that makes for fast installations; no predrilling or separate washer needed.

Codes/Standards: IAPMO-UES ER-192, City of Los Angeles RR25906, State of Florida FL13975

US Patent 9,523,383

For more information, see p. 57, C-F-2019 Fastening Systems Catalog and Engineering Letters: L-F-SDWH27GRD for round pile connection loads/details, and L-F-SDWH27GSQ for square pile connection loads/details

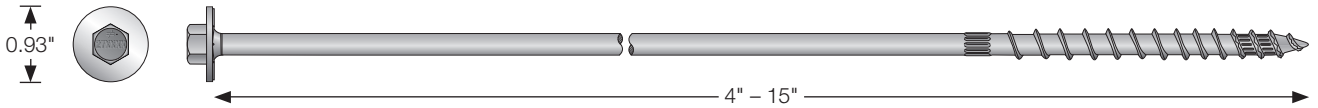

SDWH Timber-Hex HDG — Allowable Single Shear and Withdrawal Loads

Size (dia. x length) (in.)	Model No.	Thread Length (in.)	Reference Allowable Shear Loads (lb.)						Reference Allowable Withdrawal Load, W (lb./in.)			Max. Withdrawal Load, W_{max} (lb.)		
			Wood Side Member Thickness (in.)											
			SP		DFL		HF/SPF		SP	DFL	HF/SPF	SP	DFL	HF/SPF
			1.5	3	1.5	3	1.5	3						
0.276 x 4	SDWH27400G	3	505	—	440	—	400	—	287	255	212	860	765	635
0.276 x 6	SDWH27600G	3	505	545	440	545	400	450						
0.276 x 8	SDWH27800G	3	570	675	430	675	430	595						
0.276 x 10	SDWH271000G	3	570	675	430	675	430	595						
0.276 x 12	SDWH271200G	3	570	675	430	675	430	595						
0.276 x 15	SDWH271500G	3	570	675	430	675	430	595						

1. All shear loads are based on full penetration into the main member. Full penetration is the screw length minus the side member thickness.
2. Allowable loads are shown at the wood load duration factor of C_D=1.0. Loads may be increased for load duration per the building code up to a C_D=1.6. Tabulated values must be multiplied by all applicable adjustment factors per the NDS.
3. For in-service moisture content greater than 19%: withdrawal C_M=0.65; shear C_M=0.70.
4. When using tabulated single shear loads for multiple fasteners, minimum fastener spacing requirements: 8" end distance, 1½" edge distance, ⅝" between staggered rows of fasteners, 4" between non-staggered rows of fasteners and 8" between fasteners in a row, multiply the table values by 0.80.
5. Tabulated loads are for both parallel- and perpendicular-to-grain loading.
6. Maximum withdrawal loads are based on full thread length penetration in the main member.
7. SDWH271500G is not included in IAPMO-UES-ER-192.

C-F-2019TECHSUP ©2019 SIMPSON STRONG-TIE COMPANY INC.

Strong-Drive®
SDWH TIMBER-HEX HDG Screw (cont.)

Round Pilings

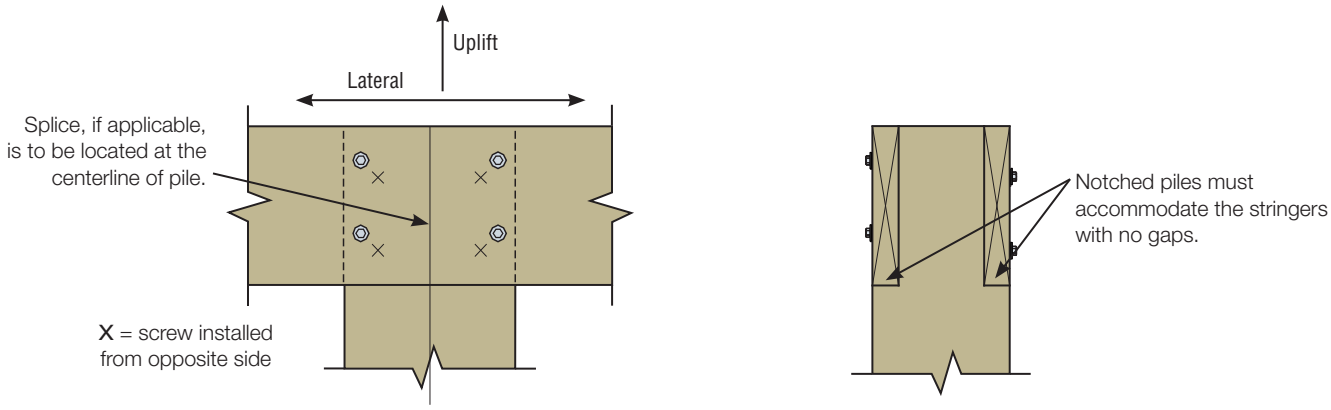

SDWH Timber-Hex HDG — Stringer-to-Round Pile Connection Loads

Round Pile Diameter (in.)	Nominal Stringer Size (in.)	Total No. Stringers	Screw Length (in.)	Model No.	No. Screws (Each Side)	Reference Allowable Connection Loads (lb.)					
						Uplift			Lateral		
						Continuous	Spliced	End	Continuous	Spliced	End
10	2 x 10	2	10	SDWH271000G	4	3,965	2,960	2,140	3,430	3,190	2,875
12	2 x 10	2	12	SDWH271200G	4	3,725	3,130	2,240	4,000	3,645	3,505
14	2 x 10	2	12	SDWH271200G	4	1,865	1,565	1,120	2,000	1,825	1,755
10	2 x 10	4	10	SDWH271000G	4	4,590	3,745	2,785	3,430	3,190	2,875
12	2 x 10	4	12	SDWH271200G	4	7,055	4,975	4,140	4,990	4,165	3,130
12	2 x 12	4	12	SDWH271200G	6	8,735	5,330	4,750	6,000	5,470	5,260
14	2 x 10	4	12	SDWH271200G	4	3,530	2,490	2,070	2,495	2,085	1,565
14	2 x 12	4	12	SDWH271200G	6	4,370	2,665	2,375	3,000	2,735	2,630

1. All tabulated values are based on double shear action with the same size and quantity of stringers on each side of the pile.
2. Dimensions and allowable connection loads are based on notched piles that must accommodate the stringers with adequate bearing and no gaps. Notched piles shall not be notched such that more than 50% of the cross section is removed. Unnotched piles may be used providing the width and area of wood between the stringers and the fastener placement geometry is unchanged from the notched conditions.
3. Allowable loads are shown at the wood load duration factor of C_D=1.0. Loads may be increased for load duration per the building code up to a C_D=1.6. Tabulated values must be multiplied by all applicable adjustment factors per the NDS.
4. For in-service moisture content greater than 19%, use C_M = 0.68.
5. For conditions with stringers on one side only, use the longest screw length that does not extend beyond the opposite surface of the pile. Use one quarter of the loads shown for that length screw and stringer condition.
6. Wood piles are SP. Wood stringers may be sawn lumber, glulam or SCL with minimum SG = 0.55 (or equivalent). For stringer widths at least 1.5" and less than 3.0" thick, use the table values for the conditions with a single 2x stringer on each side of the pile.
7. For 14" diameter piles, use the same screw pattern as for the 12" piles. Loads for 14" diameter piles are based on single shear action.
8. When a screw is loaded simultaneously in more than one direction, the allowable load must be evaluated using the unity equation: (Design Uplift ÷ Allowable Uplift) + (Design F1 ÷ Allowable F1) + (Design F2 ÷ Allowable F2) ≤ 1.0. The three terms in the unity equation represent the possible generated force directions. The number of terms that must be considered for simultaneous loading is the sole discretion of the Designer and depends on the method of calculating wind forces and the utilization of the screws within the structural system.

C-F-2019TECHSUP ©2019 SIMPSON STRONG-TIE COMPANY INC.

Strong-Drive®
SDWH TIMBER-HEX SS Screw

Structural Wood-to-Wood Connections Including Ledgers, Indoor/Outdoor Projects, Applications Requiring High to Severe Corrosion Resistance

Type 316 stainless steel provides severe-corrosion resistance, making it suitable for exterior and preservative-treated wood applications.

For more information, see p. 56, C-F-2019 Fastening Systems Catalog

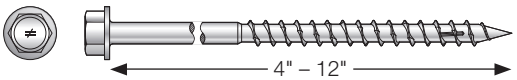

SDWH SS — Allowable Shear Loads-Douglas Fir–Larch, Southern Pine, Spruce-Pine-Fir, Hem-Fir

Size (dia. x length) (in.)	Model No.	Thread Length (in.)	Head Diameter (in.)	Reference Allowable Shear Loads (lb.)		
				Wood Side Member Thickness (in.)		
				1½	3	3½
0.188 x 4	SDWH19400SS	2.40	0.46	177	—	—
0.188 x 4½	SDWH19450SS	2.75	0.46	177	177	—
0.188 x 5	SDWH19500SS	2.40	0.46	177	177	177
0.188 x 6	SDWH19600SS	2.40	0.46	177	177	177
0.188 x 8	SDWH19800SS	2.40	0.46	177	177	177
0.276 x 4	SDWH27400SS	2.95	0.66	235	—	—
0.276 x 5	SDWH27500SS	2.95	0.66	235	235	235
0.276 x 6	SDWH27600SS	2.95	0.66	235	235	235
0.276 x 8	SDWH27800SS	2.95	0.66	235	235	235
0.276 x 10	SDWH271000SS	2.95	0.66	235	235	235
0.276 x 12	SDWH271200SS	2.95	0.66	235	235	235

1. All applications are based on full penetration into the main member. Full penetration is the screw length minus the side member thickness.
2. Allowable loads are shown at the load duration factor of C_D = 1.0. Loads may be increased for load duration per the building code up to a C_D = 1.6. Tabulated values must be multiplied by all applicable adjustment factors per the NDS.
3. Table values based on testing in SPF lumber.
4. Minimum fastener spacing requirements: 3" end distance, 1 7/16" edge distance, 1½" between staggered rows of fasteners, 3" between non-staggered rows of fasteners and 3" between fasteners in a row.
5. Design values include NDS wet service factor; no adjustment required for in-service moisture content greater than 19%.
6. Allowable loads are perpendicular or parallel to grain.
7. Installs best with 18v high-torque cordless or ½" low speed drill. If splitting occurs predrill with 5/32" drill bit for 0.188" screws and 7/32" drill bit for 0.276" screws.
8. Allowable withdrawal load for the 0.188" screw for DFL/SP is 155 lb./in. and for SPF/HF is 108 lb./in. Allowable load is based on inches of thread penetration into the main member.
9. Allowable withdrawal load for the 0.276" screw for DFL/SP is 260 lb./in. and for SPF/HF is 160 lb./in. Allowable load is based on inches of thread penetration into the main member.
10. For LRFD values, the reference connection design values shall be adjusted in accordance with NDS-18, section 11.3.

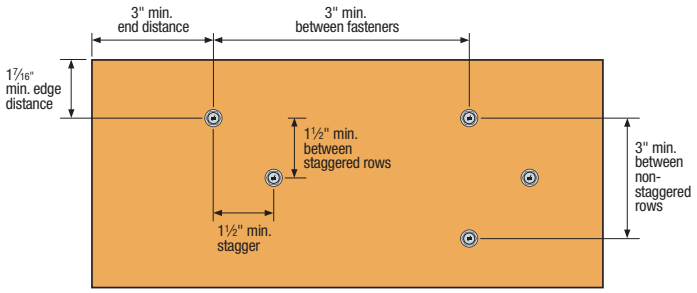

SDWH SS Screw Spacing Detail

C-F-2019TECHSUP ©2019 SIMPSON STRONG-TIE COMPANY INC.

Strong-Drive® SD CONNECTOR Screw

Simpson Strong-Tie® Connectors, Indoor/Outdoor Projects

Codes/Standards: ICC-ES ESR-3046, State of Florida FL 9589

For more information, see p. 61, C-F-2019 Fastening Systems Catalog

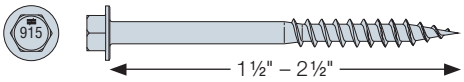

SD — Allowable Shear Loads for Wood Connections

Size (in.)	Model No.	Thread Length (in.)	Reference DFL/SP Allowable Shear Loads (lb.)			Reference SPF/HF Allowable Shear Loads (lb.)		
			Wood Side Plate Thickness (in.)			Wood Side Plate Thickness (in.)		
			15/32 - ½	23/32 - ¾	1 ½	15/32 - ½	23/32 - ¾	1 ½
#9 x 1 ½	SD9112	1	105	—	—	93	—	—
#9 x 2 ½	SD9212	1	118	133	130	99	94	109
#10 x 1 ½	SD10112	1	127	—	—	102	—	—
#10 x 2 ½	SD10212	1	147	168	152	106	126	123

1. Allowable loads are shown at the wood load duration factor of C_D = 1.00. Loads may be increased for load duration per the building code up to a C_D = 1.60.
2. The 15/32" and 23/32" side members must be plywood or OSB with minimum equivalent specific gravities of 0.50 for DFL and SP design values, and 0.42 for SPF and HF design values. See NDS, Table 12.3.3B for specific WSP grades and associated equivalent specific gravities.
3. Loads are based on connections with main members of DFL/SP or SPF/HF and side members as shown and described in table note 2. Screws shall be installed normal to the surface of the wood members.

SD — Allowable Withdrawal Loads — DFL, SP, SPF, HF Lumber

Size (in.)	Model No.	Thread Length (in.)	Head Diameter (in.)	Reference Withdrawal Design Value, W (lb./in.)	
				DFL and SP Main Member	SPF and HF Main Member
#9 x 1 ½	SD9112	1.0	0.37	173	122
#9 x 2 ½	SD9212				
#10 x 1 ½	SD10112			173	122
#10 x 2 ½	SD10212				

1. The tabulated reference withdrawal design value, W, is in pounds per inch of the thread penetration into the side grain of the main member.
2. Tabulated reference withdrawal design value, W, must be multiplied by all applicable adjustment factors from the NDS as referenced in the IBC or IRC.
3. Embedded thread length is that portion held in the main member including the screw tip.
4. For connections with 15/32" thick plywood or OSB side members, reference withdrawal design values, W, must be limited by the head pull-through design value of 130 lb.

C-F-2019TECHSUP ©2019 SIMPSON STRONG-TIE COMPANY INC.

Strong-Drive® SDS HEAVY-DUTY CONNECTOR Screw

Heavy-Duty Simpson Strong-Tie® Connectors, Indoor/Outdoor Projects

For more information, see p. 60, C-F-2019 Fastening Systems Catalog

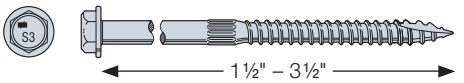

SDS — Allowable Shear Loads — Douglas Fir–Larch and Southern Pine Lumber

Size (in.)	Model No.	Reference DFL/SP Allowable Shear Loads (lb.)												
		Wood Side Plate Thickness (in.)												
		½	⅝	¾	1	1⅛	1¼	1½	1¾	2½	3	3½	4	4½
¼ x 2	SDS25200	145	—	—	—	—	—	—	—	—	—	—	—	—
¼ x 2½	SDS25212	165	165	170	165	—	—	190[1]	—	—	—	—	—	—
¼ x 3	SDS25300	165	165	170	185	195	205	280[1]	—	—	—	—	—	—
¼ x 3½	SDS25312	165	165	170	185	195	205	340[1]	340[1]	—	—	—	—	—
¼ x 4½	SDS25412	165	165	170	185	195	205	350[1]	340[1]	230	200	—	—	—
¼ x 5	SDS25500	165	165	170	185	195	205	350[1]	340[1]	230	230	200	—	—
¼ x 6	SDS25600	165	165	170	185	195	205	350[1]	340[1]	340[1]	340[1]	340[1]	230	200
¼ x 8	SDS25800	165	165	170	185	195	205	350[1]	340[1]	340[1]	340[1]	340[1]	230	230

SDS — Allowable Shear Loads — Spruce-Pine-Fir and Hem-Fir

Size (in.)	Model No.	Reference SPF/HF Allowable Shear Loads (lb.)												
		Wood Side Plate Thickness (in.)												
		½	⅝	¾	1	1⅛	1¼	1½	1¾	2½	3	3½	4	4½
¼ x 2	SDS25200	105	—	—	—	—	—	—	—	—	—	—	—	—
¼ x 2½	SDS25212	130	135	130	120	—	—	135[1]	—	—	—	—	—	—
¼ x 3	SDS25300	130	140	140	150	150	145	200[1]	—	—	—	—	—	—
¼ x 3½	SDS25312	130	140	140	150	155	165	245[1]	245[1]	—	—	—	—	—
¼ x 4½	SDS25412	130	140	140	150	155	165	250[1]	245[1]	190	160	—	—	—
¼ x 5	SDS25500	130	140	140	150	155	165	250[1]	245[1]	190	190	160	—	—
¼ x 6	SDS25600	130	140	140	150	155	165	250[1]	245[1]	245[1]	245[1]	245[1]	190	160
¼ x 8	SDS25800	130	140	140	150	155	165	250[1]	245[1]	245[1]	245[1]	245[1]	195	195

1. Noted loads are based on testing per ICC-ES AC233 and assume a minimum main member thickness of the screw length minus the side member thickness. All other allowable loads are based on the NDS and a minimum penetration of 6D = 1.45" into the main member.
2. Values are valid for a connection involving only two members. Where the side and main members have different specific gravities, the lower specific gravity shall be used.
3. Allowable loads are also applicable to structural composite lumber (e.g., LVL, PSL, and LSL) having an equivalent specific gravity of 0.50 or greater.
4. Allowable loads are shown at the wood load duration factor of C_D = 1.00. Loads may be increased for load duration by the building code up to a C_D = 1.60. The Designer shall apply all adjustment factors required per NDS.
5. Loads are based on perpendicular installation into the side grain of the wood members.
6. Loads apply to corresponding stainless-steel models.
7. For in-service moisture greater than 19% use C_M = 0.7.

C-F-2019TECHSUP ©2019 SIMPSON STRONG-TIE COMPANY INC.

Strong-Drive® SDWS TIMBER Screw in Ledger-to-Stud Applications

Strong-Drive SDWS Timber screws may be used to attach a ledger to the narrow face of nominal 2x lumber studs according to the following table. Tests and analyses were performed in accordance with ICC-ES Acceptance Criteria AC233.

For more information, see p. 53, C-F-2019 Fastening Systems Catalog

SDWS Timber Screw — Allowable Shear Loads for Ledger to Studs

Size (in.)	Model No.	Ledger Nominal Size (in.)	Number of Screws per Stud	Reference Allowable Shear Load (lb.)		
				SP	DFL	SPF/HF
0.22 x 4	SDWS22400DB	2x6	2	785	630	565
		2x8	3	1,060	890	855
		2x10	4	—	1,040	1,040

1. Allowable loads shall be limited to parallel-to-grain loaded solid sawn main members (minimum 2" nominal). Wood side members shall be loaded perpendicular to grain.
2. Allowable loads are based on DFL, SPF/HF, and SP wood members having a minimum specific gravity of 0.50, 0.42, and 0.55, respectively. Where the side and main members have different specific gravities, the lower values shall be used.
3. Allowable loads are shown at the wood load duration factor of C_D = 1.00. Loads may be increased for load duration as permitted by the building code up to a C_D = 1.60. All adjustment factors shall be applied per the 2012 National Design Specification (NDS). For in-service moisture content greater than 19%, use C_M = 0.70.
4. Fasteners shall be centered in the stud and spaced as shown in the figure. The stud minimum end distance is 6" when loaded toward the end and 2½" when loaded away from the end. The ledger end distance is 6" for full values. For ledger end distances between 2" and 6" use 50% of the table loads. For end distances between 2" and 4", predrill using a 5/32" bit for SDWS.
5. Screws may be installed with an intermediate layer of wood structural panel between the side and main member provided the wood structural panel is fastened to the main member per code and the minimum screw penetration of 2½" into the main member (excluding the wood structural panel) is met. Longer lengths of the screw series may be used.
6. For LRFD values, the reference connection design values shall be adjusted in accordance with the NDS-2018, section 11.3.
7. For 2x10 SP ledgers, use the number of screws and allowable loads of the 2x8 SP ledger.
8. For 2x8 ledgers with two screws, use 2x6 values. For 2x10 ledgers with three screws, use 2x8 values. Spacings and edge distances shown in the figure are minimum dimensions.
9. For loads in the opposite direction from that shown in the figure, use the table values multiplied by: 0.50 for two-screw connections, 0.67 for three-screw connections, and 0.75 for four-screw connections.

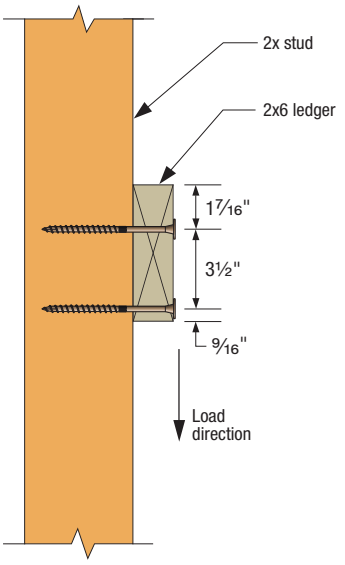

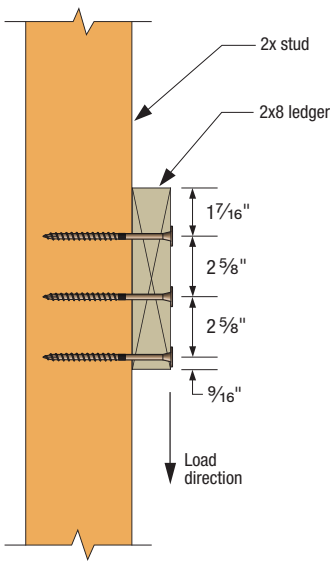

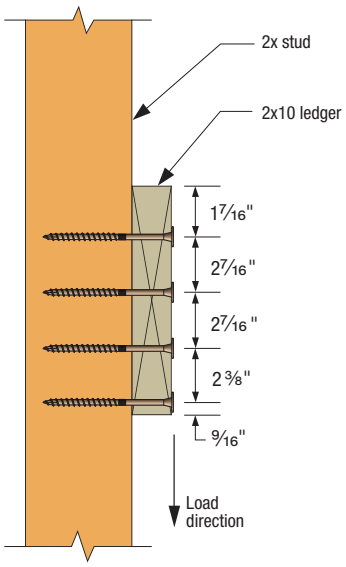

C-F-2019TECHSUP ©2019 SIMPSON STRONG-TIE COMPANY INC.

Strong-Drive® SDWS **TIMBER** Screw with Gypsum Board Interlayer(s) (cont.)

SDWS Timber Screw — Allowable Shear Loads for Ledger Attachment to Studs with One or Two Layers of Gypsum Board

Size (in.)	Model No.	Ledger Size	Number of Screws per Stud	Reference Allowable Shear Load (lb.)		
				SP	DFL	SPF/HF
0.22 x 6	SDWS22600DB	2x6	2	510	410	365
		2x8	3	690	580	555
		2x10	4	—	675	675

1. Allowable loads shall be limited to parallel-to-grain loaded solid sawn main members (minimum 2" nominal). Wood side members shall be loaded perpendicular to grain.
2. Allowable loads are based on DFL, SPF/HF, and SP wood members having a minimum specific gravity of 0.50, 0.42, and 0.55, respectively. Where the side and main members have different specific gravities, the lower values shall be used.
3. Allowable loads are shown at the wood load duration factor of C_D = 1.00. Loads may be increased for load duration as permitted by the building code up to a C_D = 1.60. All adjustment factors shall be applied per the National Design Specification (NDS). For in-service moisture content greater than 19%, use C_M = 0.70.
4. Fasteners shall be centered in the stud and spaced as shown in the figure. The ledger minimum end distance is 6". The stud minimum end distance is 6" when the load is toward the end and 2½" when the load is away from the end.
5. Screws may be installed with an interlayer of wood structural panel (WSP) between the framing and the gypsum panel(s). When a WSP is present, it shall be a maximum of ½" thick, adjacent to the framing and fastened directly to the framing per code. Minimum screw penetration into the framing of 2½" shall be required; longer screw lengths shall be used to achieve the required penetration.
6. For LRFD values, the reference connection design values shall be adjusted in accordance with NDS-18, section 11.3.
7. For 2x10 SP ledgers, use the number of screws and allowable loads of the 2x8 SP ledger.
8. For 2x8 ledgers with two screws, use 2x6 values. For 2x10 ledgers with three screws, use 2x8 values. Spacings and edge distances shown in the figure are minimum dimensions.
9. For loads in the opposite direction from that shown in the figure, use the table values multiplied by: 0.50 for two-screw connections, 0.67 for three-screw connections, and 0.75 for four-screw connections.
10. Gypsum board must be attached as required per the building code.
11. For ledger end distances between 2" and 6", use 50% of load and predrill with 5/32" drill bit.

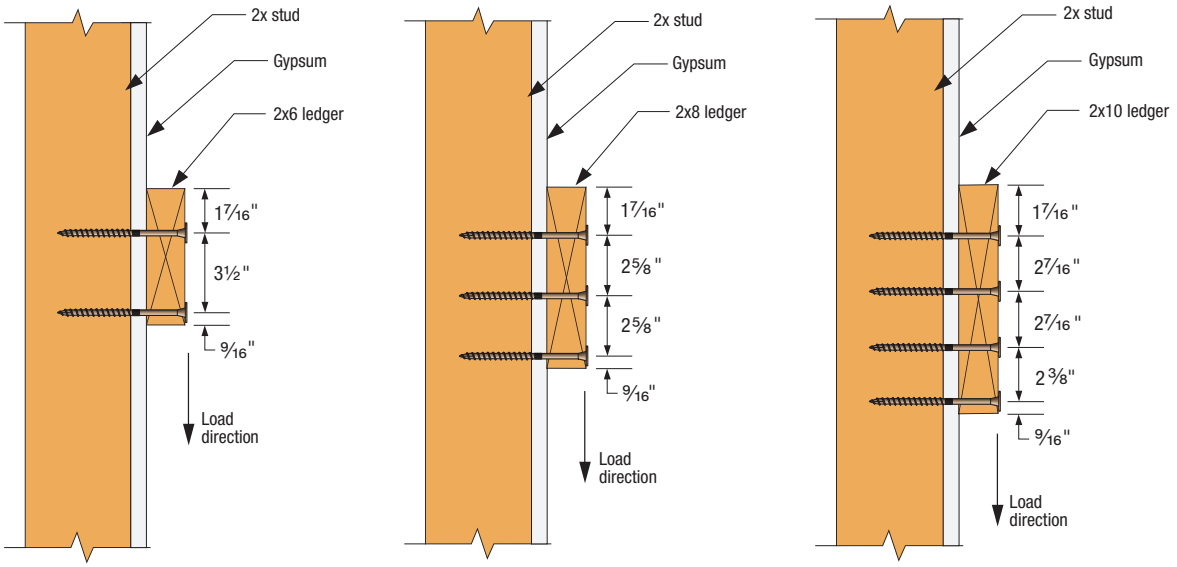

Note: Minimum stud dimension is nominal 2 x 6.

Notes to Installer Regarding the Attachment of Ledgers to Studs:

The screws must be installed into the middle of the stud with a tolerance of 3/16" either side of center. Various methods can be used to ensure proper placement of the screws in the stud including snapping a chalk line, using a stud finder or prerocking (attaching only a strip of gypsum at the ledger location until the ledger is fastened to the studs). If proper screw placement into the stud cannot be achieved in the field, blocking should be installed between studs to receive and support the ledger screws.

C-F-2019TECHSUP ©2019 SIMPSON STRONG-TIE COMPANY INC.

Strong-Drive® SDWS TIMBER Screw with Gypsum Board Interlayer(s) (cont.)

SDWS Timber Screw — 2015 and 2018 IRC Compliant Spacing for a Sawn Lumber Ledger to Rim Board with One or Two Layers of ⅝" Gypsum Board

Loading Condition	Nominal Ledger Thickness (in.)	Model No.	Rim Board Material and Minimum Size	Maximum Deck Joist Span						
				Up to 6 ft.	Up to 8 ft.	Up to 10 ft.	Up to 12 ft.	Up to 14 ft.	Up to 16 ft.	Up to 18 ft.
				Maximum On-Center Spacing of Fasteners (in.)						
40 psf Live 10 psf Dead	2x	For one layer of gypsum board use: SDWS22400DB For two layers of gypsum board use: SDWS22500DB	1" OSB 1" LVL	13	10	8	6	6	5	4
			1⅛" OSB 1 5/16" LVL 1¼" LSL	15	11	9	8	7	6	5
			2x SP, DFL 2x SPF, HF	20	15	12	10	9	8	7
100 psf Live 10 psf Dead	2x	For one layer of gypsum board use: SDWS22400DB For two layers of gypsum board use: SDWS22500DB	1" OSB 1" LVL	6	4	4	—	—	—	—
			1⅛" OSB 1 5/16" LVL 1¼" LSL	8	6	5	4	—	—	—
			2x SP, DFL 2x SPF, HF	9	7	5	5	4	—	—
100 psf Live 10 psf Dead	(2) 2x	For one layer of gypsum board use: SDWS22600DB	1" OSB 1" LVL	7	5	4	—	—	—	—
			1⅛" OSB 1 5/16" LVL 1¼" LSL	7	5	4	—	—	—	—
			2x SP, DFL 2x SPF, HF	7	5	4	—	—	—	—
60 psf Live 10 psf Dead	2x	For one layer of gypsum board use: SDWS22400DB For two layers of gypsum board use: SDWS22500DB	1" OSB 1" LVL	9	7	6	5	4	—	—
			1⅛" OSB 1 5/16" LVL 1¼" LSL	11	8	7	5	5	4	4
			2x SP, DFL 2x SPF, HF	14	11	9	7	6	5	5
40 psf Live 10 psf Dead	(2) 2x	For one layer of gypsum board use: SDWS22600DB	1" OSB 1" LVL	14	11	9	7	6	5	5
			1⅛" OSB 1 5/16" LVL 1¼" LSL	15	11	9	8	7	6	5
			2x SP, DFL 2x SPF, HF	15	11	9	8	7	6	5
60 psf Live 10 psf Dead	(2) 2x	For one layer of gypsum board use: SDWS22600DB	1" OSB 1" LVL	10	8	6	5	5	4	—
			1⅛" OSB 1 5/16" LVL 1¼" LSL	11	8	6	5	5	4	4
			2x SP, DFL 2x SPF, HF	11	8	6	5	5	4	4

1. Sawn rim board shall be spruce-pine-fir, hem-fir, Douglas fir–larch, or southern pine species. Ledger shall be hem-fir, Douglas fir–larch, or southern pine species.
2. Fastener spacings are based on the lesser of single fastener ICC-ES AC233 testing of the Strong-Drive® SDWS screw with a safety factor of 5.0 or ledger assembly testing based on ICC-ES AC13 with a factor of safety of 3.0. Spacing does NOT include NDS wet service factor adjustment.
3. Multiple ledger plies shall be fastened together per code independent of the SDWS screws.
4. SDWS screw spacing values are equivalent to 2018 IRC Table R507.9.1.3(1) and 2012/2015 IRC Table R507.2. The table also provides SDWS screw spacing for a wider range of materials commonly used for rim boards, and an alternate loading condition as required by some jurisdictions.
5. Rows of screws shall be vertically offset and evenly staggered. Screws shall be placed 1½" to 2" from the top and bottom of the ledger or rim board with 3" minimum and 6" maximum between rows and spaced per the table. End screws shall be located 6" from the end and at 1½" to 2" from the bottom of the ledger. For screws located at least 2" but less than 6" from the end, use 50% of the load per screw and 50% of the table spacing between the end screw and the adjacent screw, and for screws located between 2" and 4" from the end, predrill using a 5/32" drill.
6. The design installation permits a wood structural panel (WSP) interlayer in addition to one or two layers of gypsum board. If present, the WSP shall be a maximum of ½" thick, adjacent to the framing and fastened directly to the framing per the code.
7. Gypsum board must be attached as required per the building code.

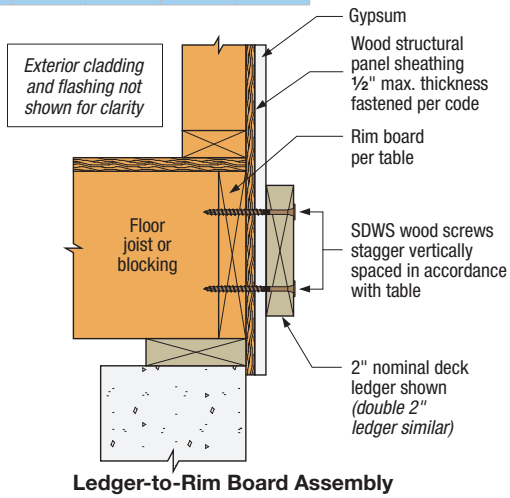

Ledger-to-Rim Board Assembly
(wood-framed lower floor acceptable, concrete wall shown for illustration purposes)

C-F-2019TECHSUP ©2019 SIMPSON STRONG-TIE COMPANY INC.

Strong-Drive® SDWH TIMBER-HEX Screw in Ledger-to-Stud Applications

Strong-Drive SDWH Timber-Hex screws may be used to attach a ledger to the narrow face of nominal 2x lumber studs according to the following table. Tests and analyses were performed in accordance with ICC-ES Acceptance Criteria AC233.

For more information, see p. 55, C-F-2019 Fastening Systems Catalog

SDWH Timber-Hex Screw — Allowable Shear Loads for Ledger to Studs

Size (in.)	Model No.	Nominal Ledger Size (in.)	Number of Screws per Stud	Reference Allowable Shear Load (lb.)		
				SP	DFL	SPF/HF
0.197 x 4	SDWH19400DB	2x6	2	630	630	540
		2x8	3	630	815	815
		2x10	4	—	1,170	975

1. Allowable loads shall be limited to parallel-to-grain loaded solid sawn main members (minimum 2" nominal). Wood side members shall be loaded perpendicular to grain.
2. Allowable loads are based on DFL, SPF/HF, and SP wood members having a minimum specific gravity of 0.50, 0.42, and 0.55, respectively. Where the side and main members have different specific gravities, the lower values shall be used.
3. Allowable loads are shown at the wood load duration factor of C_D = 1.00. Loads may be increased for load duration as permitted by the building code up to a C_D = 1.60.
   For in-service moisture content greater than 19%, use C_M = 0.70.
4. Fasteners shall be centered in the stud and spaced as shown in the figure. The stud minimum end distance is 6" when loaded toward the end and 2½" when loaded away from the end. The ledger end distance is 6" for full values. For ledger end distanced between 2" and 6" use 50% of the table loads. For end distances between 2" and 4", predrill using a ⅛" bit for the SDWH.
5. Screws may be installed with an intermediate layer of wood structural panel between the side and main member provided the wood structural panel is fastened to the main member per code and the minimum screw penetration of 2½" into the main member (excluding the wood structural panel) is met. Longer lengths of the screw series may be used.
6. For LRFD values, the reference connection design values shall be adjusted in accordance with the NDS-2018, section 11.3.
7. For 2x10 SP ledgers, use the number of screws and allowable loads of the 2x8 SP ledger.
8. For 2x8 ledgers with two screws, use 2x6 values. For 2x10 ledgers with three screws, use 2x8 values. Spacings and edge distances shown in the figure are minimum dimensions.
9. For loads in the opposite direction from that shown in the figure, use the table values multiplied by: 0.50 for two-screw connections, 0.67 for three-screw connections, and 0.75 for four-screw connections.

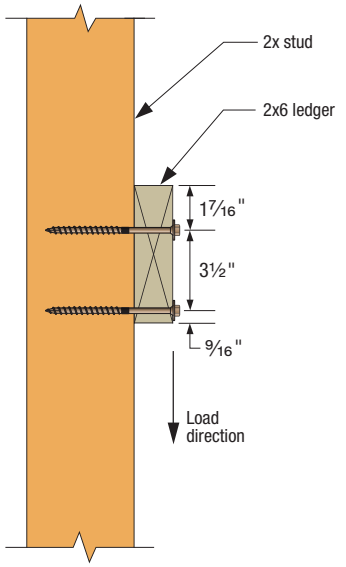

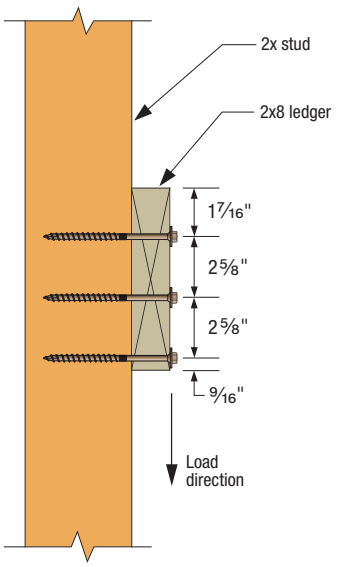

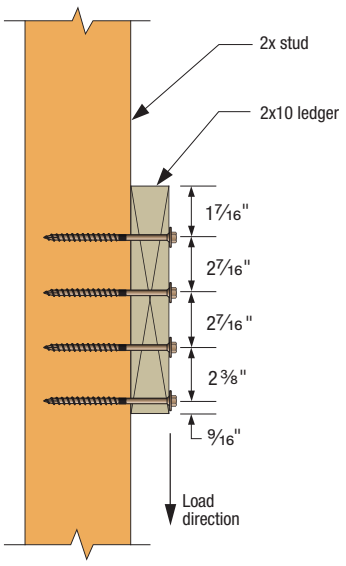

C-F-2019TECHSUP ©2019 SIMPSON STRONG-TIE COMPANY INC.

Strong-Drive® SDWH TIMBER-HEX Screw with Gypsum Board Interlayer(s)

SDWH Timber-Hex Screw — Allowable Shear Loads for Ledger Attachment to Studs with One or Two Layers of ⅝" Gypsum Board

Size (in.)	Model No.	Nominal Ledger Size (in.)	Number of Screws per Stud	Reference Allowable Shear Load (lb.)		
				SP	DFL	SPF/HF
0.19 x 6	SDWH19600DB	2x6	2	410	410	350
		2x8	3	410	530	530
		2x10	4	—	760	635

1. Allowable loads shall be limited to parallel-to-grain loaded solid sawn main members (minimum 2" nominal). Wood side members shall be loaded perpendicular to grain.
2. Allowable loads are based on DFL, SPF/HF, and SP wood members having a minimum specific gravity of 0.50, 0.42, and 0.55, respectively. Where the side and main members have different specific gravities, the lower values shall be used.
3. Allowable loads are shown at the wood load duration factor of C_D = 1.00. Loads may be increased for load duration as permitted by the building code up to a C_D = 1.60. All adjustment factors shall be applied per the National Design Specification (NDS). For in-service moisture content greater than 19%, use C_M = 0.70.
4. Fasteners shall be centered in the stud and spaced as shown in the figure. The ledger minimum end distance is 6". The stud minimum end distance is 6" when the load is toward the end and 2½" when the load is away from the end. For ledger end distances between 2" and 6", use half of table loads and predrill with ⅛" drill bit.
5. Screws may be installed with an interlayer of wood structural panel (WSP) between the framing and the gypsum panel(s). When a WSP is present, it shall be a maximum of ½" thick, adjacent to the framing and fastened directly to the framing per code. Minimum screw penetration into the framing of 2½" shall be required; longer screw lengths shall be used to achieve the required penetration.
6. For LRFD values, the reference connection design values shall be adjusted in accordance with the NDS-2018, section 11.3.
7. For 2x10 SP ledgers, use the number of screws and allowable loads of the 2x8 SP ledger.
8. For 2x8 ledgers with two screws, use 2x6 values. For 2x10 ledgers with three screws, use 2x8 values. Spacings and edge distances shown in the figure are minimum dimensions.
9. For loads in the opposite direction from that shown in the figure, use the table values multiplied by: 0.50 for two-screw connections, 0.67 for three-screw connections, and 0.75 for four-screw connections.
10. Gypsum board must be attached as required per the building code.

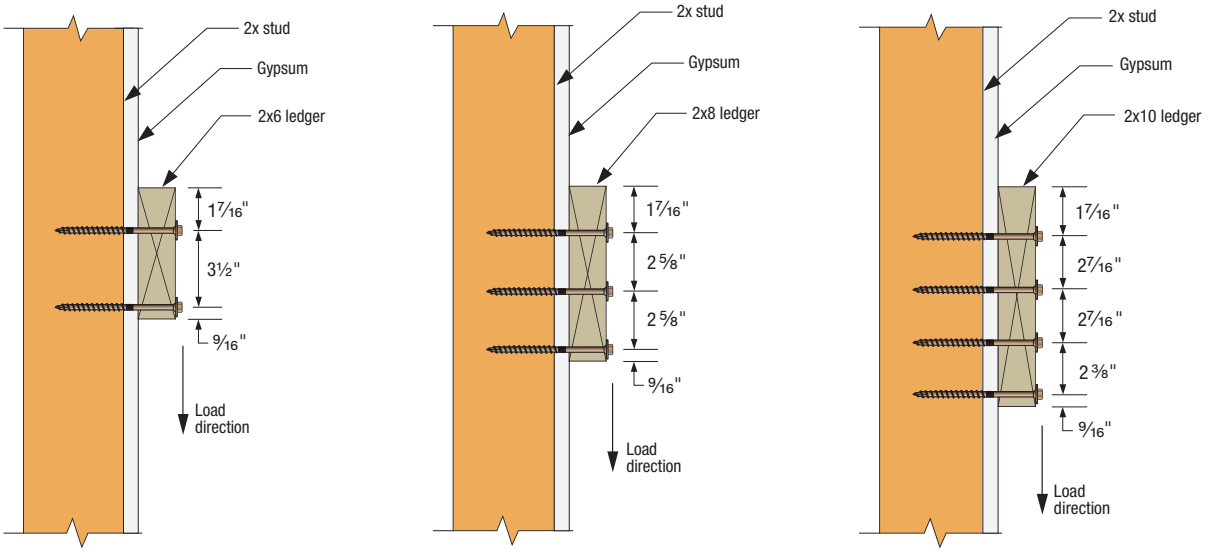

Note: Minimum stud dimension is nominal 2 x 6.

Notes to Installer Regarding the Attachment of Ledgers to Studs:

The screws must be installed into the middle of the stud with a tolerance of 3/16" either side of center. Various methods can be used to ensure proper placement of the screws in the stud including snapping a chalk line, using a stud finder, or prerocking (attaching only a strip of gypsum at the ledger location until the ledger is fastened to the studs). If proper screw placement into the stud cannot be achieved in the field, blocking should be installed between studs to receive and support the ledger screws.

C-F-2019TECHSUP ©2019 SIMPSON STRONG-TIE COMPANY INC.

Strong-Drive® SDWH TIMBER-HEX Screw with Gypsum Board Interlayer(s) (cont.)

SDWH Timber-Hex Screw — 2015 and 2018 IRC Compliant Spacing for a Sawn Lumber Ledger to Rim Board with One or Two Layers of ⅝" Gypsum Board

Loading Condition	Nominal Ledger Thickness (in.)	Model No.	Rim Board Material and Minimum Size	Maximum Deck Joist Span						
				Up to 6 ft.	Up to 8 ft.	Up to 10 ft.	Up to 12 ft.	Up to 14 ft.	Up to 16 ft.	Up to 18 ft.
				Maximum On-Center Spacing of Fasteners (in.)						
40 psf Live 10 psf Dead	2x	For one layer of gypsum board use: SDWH19400DB For two layers of gypsum board use: SDWH19600DB	1" OSB 1" LVL	12	9	7	6	5	4	4
			1⅛" OSB 1 5/16" LVL 1¼" LSL	17	12	10	8	7	6	6
			2x SP, DFL 2x SPF, HF	14	11	9	7	6	5	5
60 psf Live 10 psf Dead	2x	For one layer of gypsum board use: SDWH19400DB For two layers of gypsum board use: SDWH19600DB	1" OSB 1" LVL	8	6	5	4	4	—	—
			1⅛" OSB 1 5/16" LVL 1¼" LSL	12	9	7	6	5	4	4
			2x SP, DFL 2x SPF, HF	10	8	6	5	4	4	—
100 psf Live 10 psf Dead	2x	For one layer of gypsum board use: SDWH19400DB For two layers of gypsum board use: SDWH19600DB	1" OSB 1" LVL	5	4	—	—	—	—	—
			1⅛" OSB 1 5/16" LV 1¼" LSL	8	6	5	4	—	—	—
			2x SP, DFL 2x SPF, HF	7	5	4	—	—	—	—

1. Solid-sawn rim board shall be spruce-pine-fir, hem-fir, Douglas fir–larch, or southern pine species. Ledger shall be hem-fir, Douglas fir–larch, or southern pine species.
2. Fastener spacings are based on the lesser of single fastener ICC-ES AC233 testing of the Strong-Drive® SDWH screw with a safety factor of 5.0 or ledger assembly testing based on ICC-ES AC13 with a factor of safety of 3.0. Spacing does NOT include NDS wet service factor adjustment.
3. Multiple ledger plies shall be fastened together per code independent of the SDWH screws.
4. SDWH screw spacing values are equivalent to 2018 IRC Table R507.9.1.3(1) and 2015 IRC Table R507.2. The tables also provide SDWH screw spacing for a wider range of materials commonly used for rim board, and an alternate loading condition as required by some jurisdictions.
5. Rows of screws shall be vertically offset and evenly staggered. Screws shall be placed 1½" to 2" from the top and bottom of the ledger or rim board with 3" minimum and 6" maximum between rows and spaced per the table. End screws shall be located 6" from the end and at 1½" to 2" from the bottom of the ledger. For screws located at least 2" but less than 6" from the end, use 50% of the load per screw and 50% of the table spacing between the end screw and the adjacent screw, and for screws located between 2" and 4" from the end, predrill using a ⅛" drill.
6. The design installation permits a wood structural panel (WSP) interlayer in addition to one or two layers of gypsum board. If present, the WSP shall be a maximum of ½" thick, adjacent to the framing and fastened directly to the framing per the code.
7. Gypsum board must be attached as required per the building code.

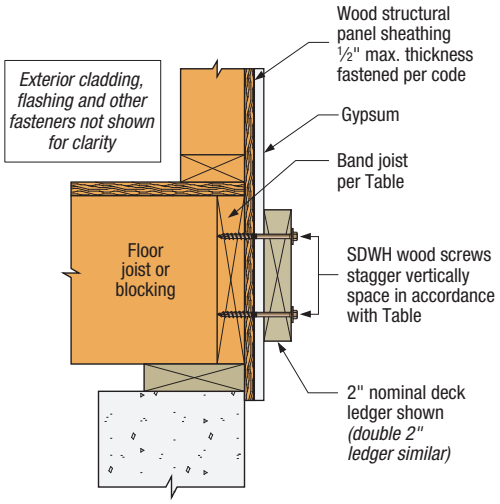

Ledger-to-Rim Board Assembly
(wood-framed lower floor acceptable, concrete wall shown for illustration purposes)

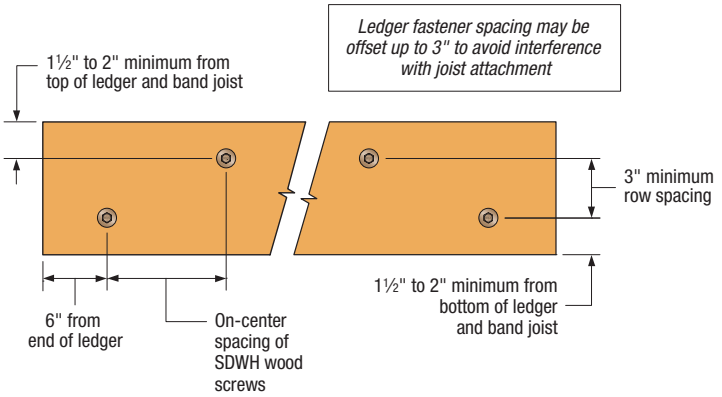

SDWH Screw Spacing Detail

C-F-2019TECHSUP ©2019 SIMPSON STRONG-TIE COMPANY INC.

Strong-Drive® SDS HEAVY-DUTY CONNECTOR Screw

SDS — Allowable Shear Loads — Installations into the Narrow Face of 2X SPF, HF, DFL, SP Lumber

Size (in.)	Model No.	Wood Side Member Actual Thickness (in.)	Minimum Main Member Penetration[5] (in.)	Reference DFL/SP Allowable Shear Loads (lb.)	Reference SPF/HF Allowable Shear Loads (lb.)
¼ x 3½	SDS25312	1½	2	250	190
¼ x 4½	SDS25412			250	190

1. Allowable loads are based on testing per ICC AC233 and are limited to parallel-to-grain loaded solid-sawn main members (2" nominal). Wood side members may be loaded parallel or perpendicular to grain (see footnote 4).
2. DFL/SP allowable loads are based on wood members having a minimum specific gravity of 0.50, and SPF/HF allowable loads are based on wood members having a minimum specific gravity of 0.42. Where the side and main members have different specific gravities, the lower values shall be used.
3. Allowable loads are shown at the wood load duration factor of C_D = 1.00. Loads may be increased for load duration by the building code up to a C_D = 1.60.
4. Minimum spacing of fasteners is 3" o.c., minimum end distance is 3" for all parallel-to-grain loaded members, or 4" for all perpendicular-to-grain loaded members, and minimum edge distance is ¾" for all parallel-to-grain loaded members, or 1½" for perpendicular-to-grain loaded side members.
5. Screws may be installed with an intermediate layer of wood structural panel between the side and main member provided the wood structural panel is fastened to the main member per code and the minimum penetration of the screw into the main member (excluding the wood structural panel) is met.

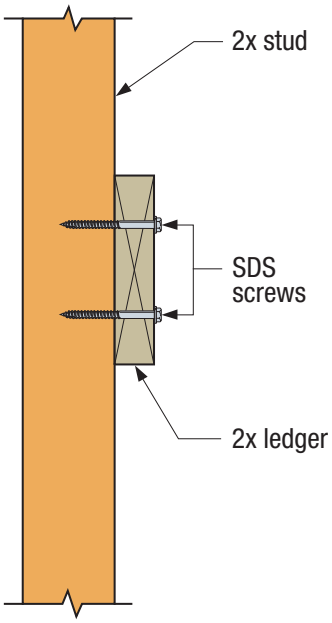

Ledger-to-Stud Assembly

C-F-2019TECHSUP ©2019 SIMPSON STRONG-TIE COMPANY INC.

Strong-Drive® SDWS **TIMBER** Screw for Attaching Exterior Foam Insulation

Simpson Strong-Tie® Strong-Drive SDWS Timber screws may be used for installing exterior rigid-foam board insulation over wood structural panel (WSP) sheathing. Each fastener installs through furring strips, rigid-foam board and WSP sheathing into the wood wall stud framing. The fasteners do not typically require predrilling. Preservative-treated wood suitable for dry-service (AWPA UC1, UC2, UC3A) and untreated wood may be used depending on the protection needs of the construction. The SDWS products with "DB" in the model number have a double-barrier coating that provides corrosion resistance equivalent to hot-dip galvanization, while the products without "DB" in the model number can only be used in conditions with dry-service and no wood treatment chemicals. The table on p. 53 provides recommended spacing for fastening to vertical furring strips through ½" to 6" of rigid foam insulation board into each wall stud. The SDWS22DB and SDWS22 screws were evaluated as alternate threaded fasteners using ICC-ES AC233 and are the subject of IAPMO-UES ER-192. The Strong-Drive SDWS22DB Structural Wood screws were evaluated for corrosion resistance using ICC-ES AC257.

For more information, see p. 53, C-F-2019 Fastening Systems Catalog

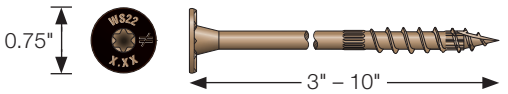

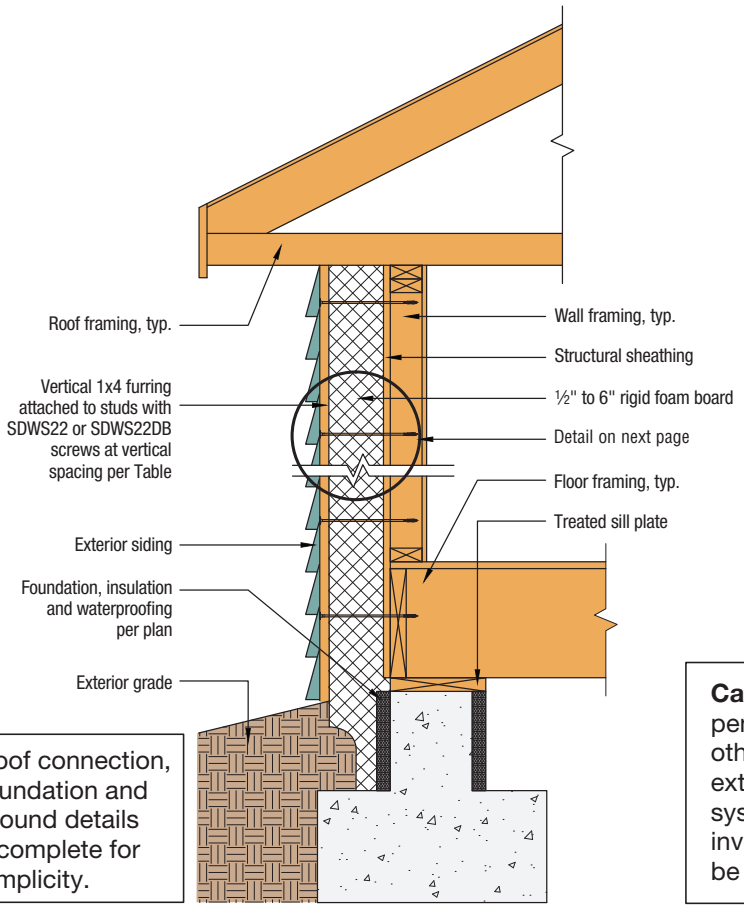

Roof connection, foundation and ground details incomplete for simplicity.

Caution: Fasteners can penetrate wiring, plumbing and other mechanical systems in exterior walls. All mechanical systems in the exterior wall involved with the fastening shall be mapped before driving screws.

Wall Cross-Section

C-F-2019TECHSUP ©2019 SIMPSON STRONG-TIE COMPANY INC.

Strong-Drive® SDWS TIMBER Screw for Attaching Exterior Foam Insulation (cont.)

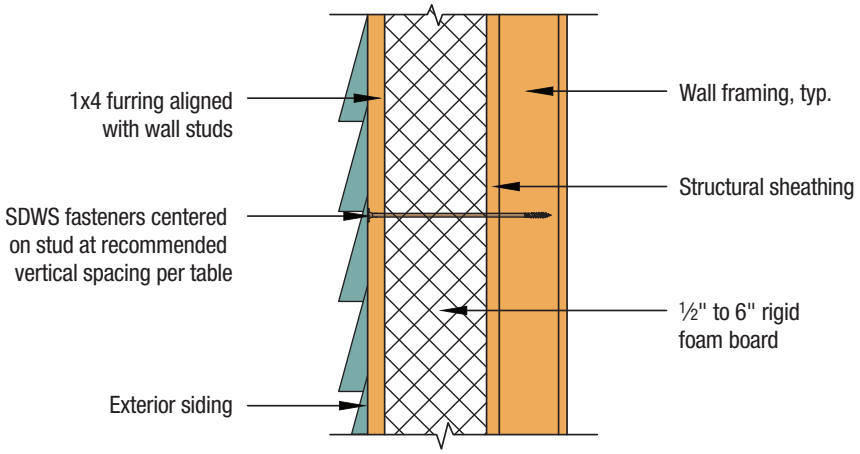

Furring and Rigid Foam Attachment Detail

Recommended Vertical Fastener Spacing

Size (in.)	Model No.	Foam Thickness (in.)	Stud Spacing (in.)	Maximum Allowable Cladding Weight to be Supported (psf)		
				≤ 20	25	30
0.220 x 4	SDWS22400DB	½	16	24" o.c.	24" o.c.	24" o.c.
			24			
0.220 x 5	SDWS22500DB	1 to 1½	16			
			24			
0.220 x 6	SDWS22600DB	2	16			
			24			
0.220 x 8	SDWS22800DB SDWS22800	4	16			
			24			
0.220 x 10	SDWS221000DB SDWS221000	6	16			
			24		18" o.c.	18" o.c.

1. Caution: Fasteners can penetrate wiring, plumbing and other mechanical systems in exterior walls. All mechanical systems in the exterior wall involved with the fastening shall be mapped before driving screws.
2. Foam sheathing shall have a minimum compressive strength of 15 psi in accordance with ASTM C578 or ASTM C1289.
3. Wood wall framing (studs) shall be a minimum of 2" nominal thickness. Wood framing and furring shall be a minimum spruce-pine-fir species with specific gravity of 0.42 or greater. Table assumes furring strip thickness of ¾" and full thread embedment in the framing member.
4. Wood framing, furring and WSP sheathing shall meet the design requirements in accordance with the applicable building codes. WSP sheathing shall be fastened to the framing as required by the applicable building code.
5. Each fastener is capable of resisting 172 lb. of out-of-`plane wind loading (C_D = 1.60) with no further increase allowed.
6. Spacing recommendations are based on a loading that produced 0.015" of assembly movement with 6"-thick rigid foam board insulation.
7. Maximum allowable cladding weight shall be the additive weight of furring, cladding including foam insulation, environmental effects (i.e. ice) and other supported materials.
8. Metal fasteners conduct heat, and it is recommended that exposed screw heads are covered with foam and sealed.
9. Screws shall be installed such that they close gaps between connected components. Furring and sheathing shall provide the required thickness and performance for siding manufacturer installation instructions.

C-F-2019TECHSUP ©2019 SIMPSON STRONG-TIE COMPANY INC.

Strong-Drive® SDWC TRUSS Screw

Rafter/Truss-to-Plate and Stud-to-Plate Connections

The SDWC screw is tested in accordance with ICC-ES AC233 (screw) and AC13 (wall assembly and roof-to-wall assembly) for uplift and lateral loads between wall plates and vertical wall framing and between the top plate and the roof rafters or trusses. SDWC15450 is recognized for use in chemically treated wood as described in the evaluation report.

Codes/Standards: IAPMO-UES ER-262, State of Florida FL13975

For more information, see pp. 84-85, C-F-2019 Fastening Systems Catalog

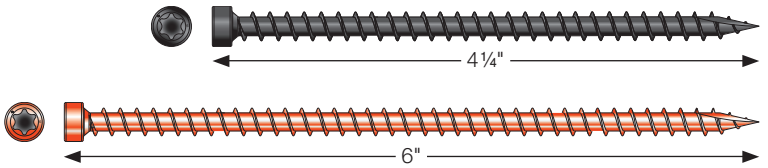

SDWC — Allowable Shear Loads — DFL, SP, SPF

Size (in.)	Model No.	Thread Length (in.)	Nominal Member Thickness (in.)		Reference Allowable Shear Loads (lb.)					
			Side Member	Main Member	Z_{para}[4]			Z_{perp}[5]		
					SP	DFL	SPF	SP	DFL	SPF
0.15 x 4½	SDWC15450	4¼	2x (Face)	2x (End grain)	—	—	—	225	205	190
0.15 x 6	SDWC15600	5¾	(2)2x (Face)	2x (Edge)	245	240	180	240	240	240
			2x (Face)	2x (End grain)	—	—	—	225	205	190
			(2)2x (Face)	2x (End grain)	—	—	—	225	225	190

1. Allowable loads are shown at the wood load duration factor of C_D = 1.0. Loads may be increased for load duation up to a C_D = 1.6.
2. Tabulated values must be multiplied by all applicable adjustment factors per the NDS.
3. The main and side members shall be sawn lumber or structural composite lumber with a specific gravity or equivalent specific gravity 0.42 to 0.55.
4. Z_{para} — Parallel-to-grain loading in the side member and perpendicular-to-grain loading in the main member.
5. Z_{perp} — Perpendicular-to-grain loading in the side member and perpendicular-to-grain loading in the main member, except for 2x (edge) where main member is loaded parallel to grain.
6. The connection conditions of this table are for specific intended applications. Reference lateral design values for all other shear connections are calculated following the NDS.

SDWC — Allowable Withdrawal and Pull-Through Loads — DFL, SP, SPF

Size (in.)	Model No.	Thread Length (in.)	Nominal Main Member Thickness (in.)	Reference Allowable Withdrawal Loads (lb./in.)			Reference Allowable Pull-Through Loads (lb./in.)		
				SP	DFL	SPF	SP	DFL	SPF
0.15 x 4½	SDWC15450	4¼	2x (Edge)	250	230	150	—	—	—
			2x (End Grain)	200	140	100	210	180	175
0.15 x 6	SDWC15600	5¾	2x (Face)	210	180	120	255	195	160
			(2) 2x (Face)	220	200	160	240	225	190

1. Allowable loads are shown at the wood load duration factor of C_D = 1.0. Loads may be increased for load duation up to a C_D = 1.6.
2. Tabulated values must be multiplied by all applicable adjustment factors per the NDS.
3. The reference withdrawal and pull-through values are in pounds per inch of the thread penetration into the main member and a minimum 1½" thick side member, respectively.

C-F-2019TECHSUP ©2019 SIMPSON STRONG-TIE COMPANY INC.

Strong-Drive® SDWC TRUSS Screw (cont.)

Continuous Load Path Considerations with the SDWC

Building codes require that structures are designed to create a continuous load path. Forces must be transferred from their point of application to the building elements that are designed to resist them. For example, when uplift forces act on a roof, the roof must be tied to the wall, and the wall must be tied to the foundation or the wall below. The SDWC Truss screws can be used to make all of the connections in the load path from the rafter/truss to top plate, top plate to stud, and stud to bottom plate. As an alternate, structural sheathing designed for uplift can be used for the load path from the wall top plate to the wall bottom plate. If Simpson Strong-Tie metal connectors are used to connect the top plate to the wall framing, they should be on the same side as the SDWC Truss screw that makes the rafter/truss-to-top plate connection. The sheathing and connector fasteners must not interfere with the SDWC Truss screw.

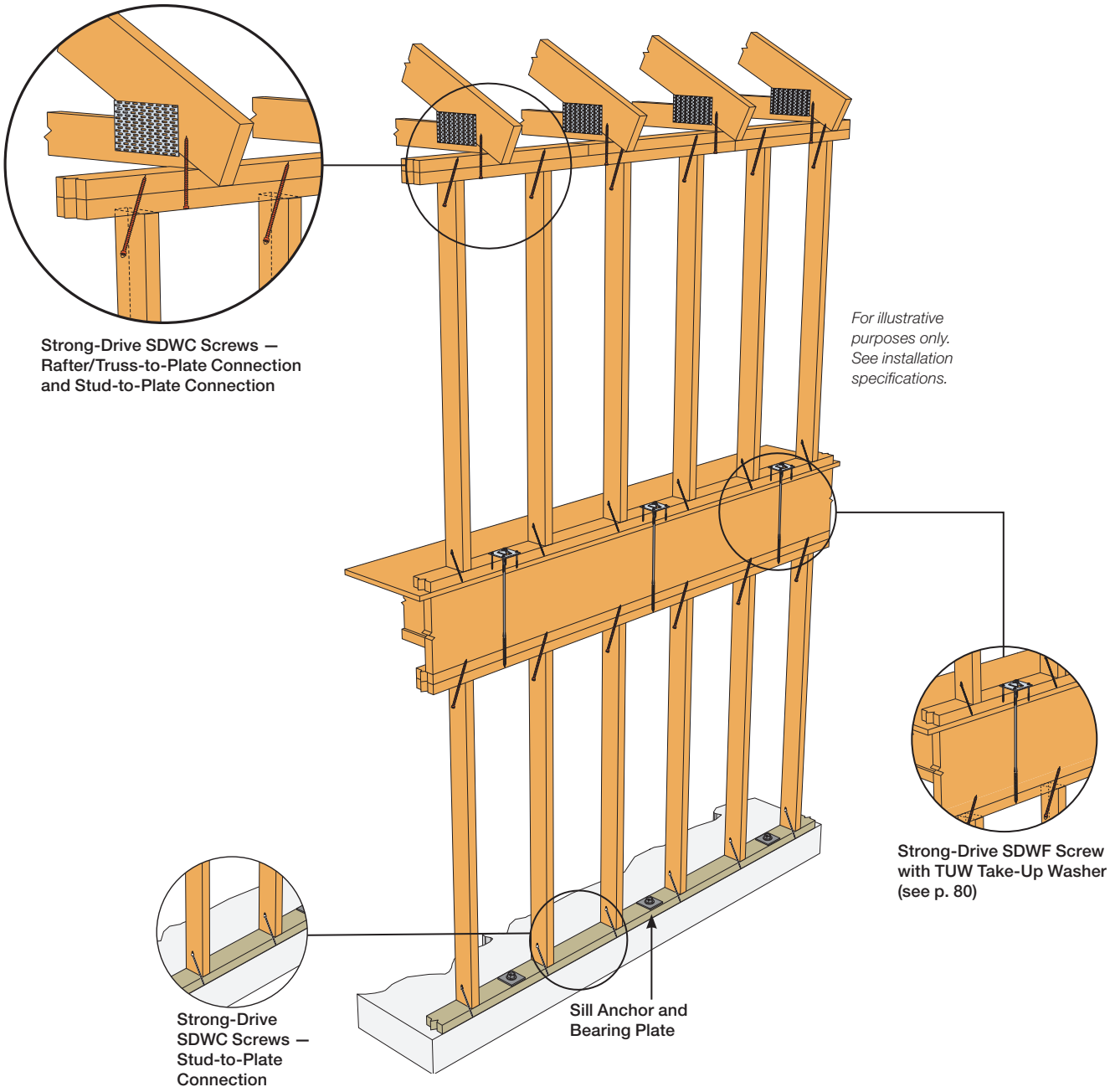

C-F-2019TECHSUP ©2019 SIMPSON STRONG-TIE COMPANY INC.

Strong-Drive®
SDWC **TRUSS** Screw for Rafter/Truss-to-Top Plate Connections

SDWC — Allowable Roof-to-Wall Connection Loads – DFL, SP, SPF, HF – Single-Screw Connections

Size (in.)	Model No.	Thread Length (in.)	Allowable Loads (lb.)					
			DFL/SP			SPF/HF		
			Uplift	F_1	F_2	Uplift	F_1	F_2
0.152 x 6	SDWC15600	5¾	615	130	225	485	115	190

1. Loads have been increased for wind and earthquake (C_D=1.6); no further increases allowed. Reduce when other loads govern.
2. Allowable loads are for an SDWC installed per the 'Recommended' or 'Optional' installation instructions. The SDWC is to be installed through a double 2x top plate into a minimum 2x4 truss or rafter.
3. An SDWC screw may be used in each ply of two- or three-ply rafters or trusses. The allowable uplift load for each screw shall be multiplied by 0.90, but may be limited by the capacity of the plate or the connection between the top plate to the framing below. SDWC screws in multi-ply assemblies must be spaced a minimum of 1½" o.c.
4. Screws are shown installed on the interior side of the wall. Installations on the exterior side of the wall are acceptable when the rafter or truss overhangs the top plates a minimum of 3½".
5. For Uplift Connection Load Path, the designer shall verify complete continuity of the uplift load path.
6. When a screw is loaded simultaneously in more than one direction, the allowable load must be evaluated using the unity equation: (Design Uplift ÷ Allowable Uplift) + (Design F1 ÷ Allowable F1) + (Design F2 ÷ Allowable F2) ≤ 1.0. The three terms in the unity equation represent the possible generated force directions. The number of terms that must be considered for simultaneous loading is the sole discretion of the Designer and depends on the method of calculating wind forces and the utilization of the screws within the structural system.
7. Table loads do not apply to trusses with end-grain bearing.
8. Top plate, stud and top plate splice fastened per applicable Building Code.

Typical Roof-to-Wall Connection

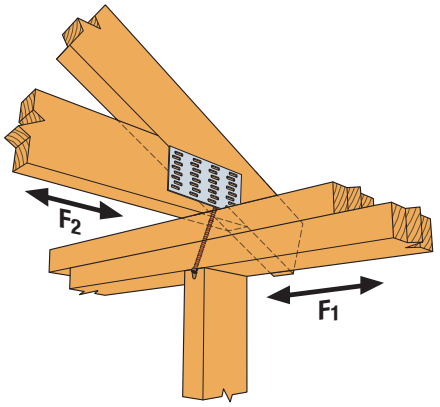

Typical SDWC Installation — Truss Aligned with Stud or Over Header
(offset truss similar)

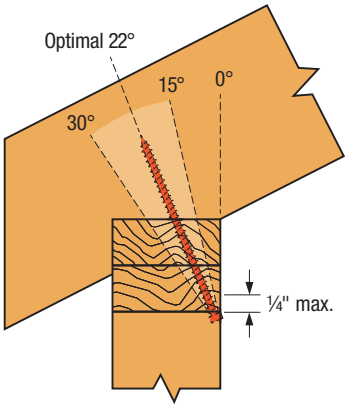

Installation Angle Limit

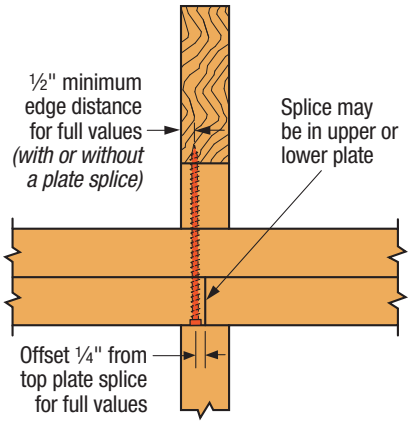

C-F-2019TECHSUP ©2019 SIMPSON STRONG-TIE COMPANY INC.

Strong-Drive® SDWC TRUSS Screw for Rafter/Truss-to-Top Plate Connections (cont.)

Optional Roof-to-Wall Connections

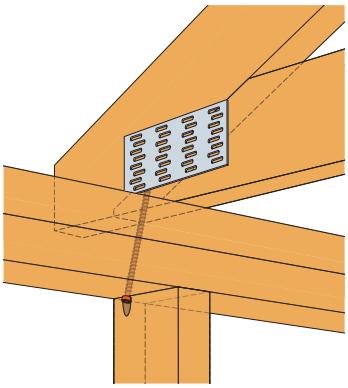

Optional SDWC Installation — Wide-Face Installation Shown

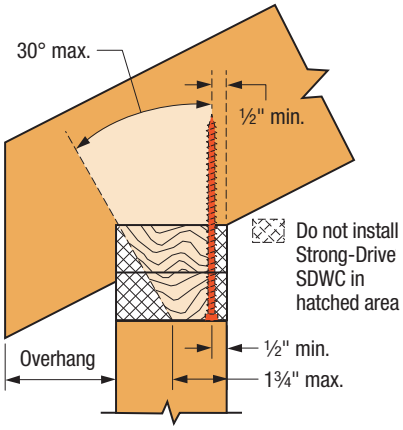

Allowable Installation Range
(rafter/truss offset from stud only)

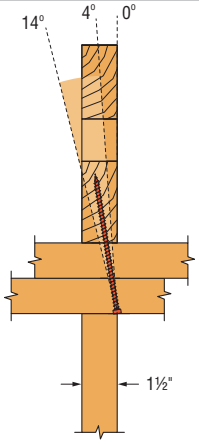

Allowable Installation Range
(front view)

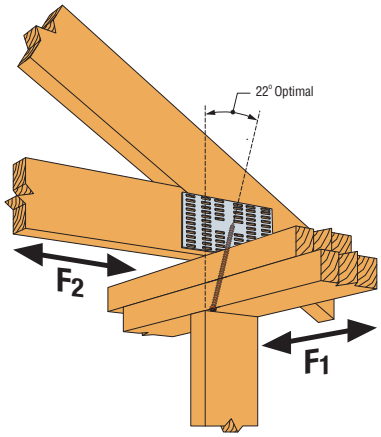

Optional SDWC Truss Screw Installation — Truss Aligned with Stud
(rafter aligned with stud similar)

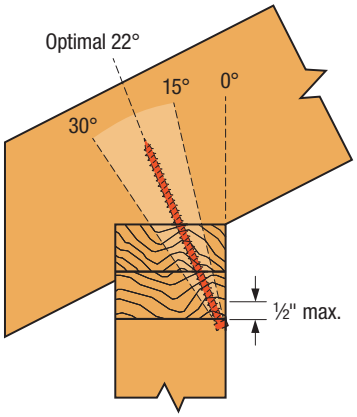

Installation Angle Limit
(side view)

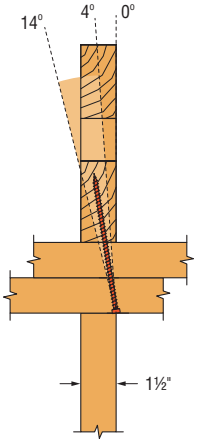

Installation Angle Limit
(front view)

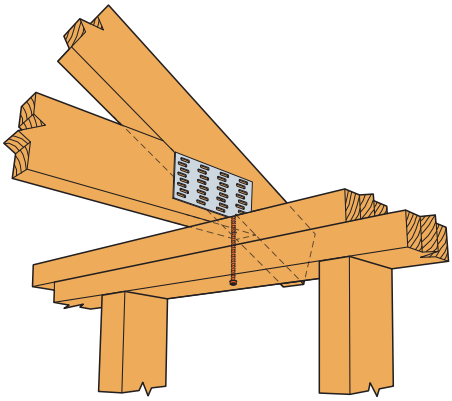

Optional SDWC Installation — Truss Offset from Stud

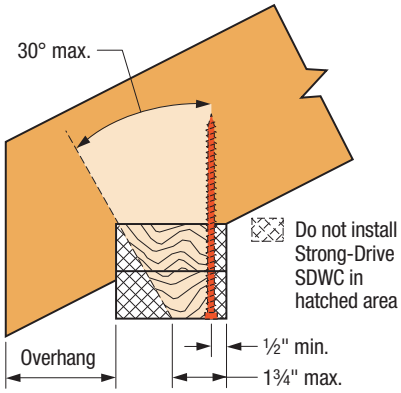

Allowable Installation Range
(truss offset from stud only)

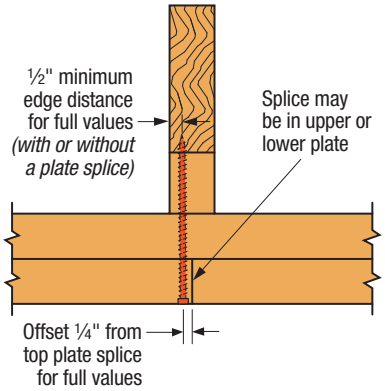

Min. Edge Distance for Top Plate Splice

C-F-2019TECHSUP ©2019 SIMPSON STRONG-TIE COMPANY INC.

Strong-Drive® SDWC TRUSS Screw for Rafter/Truss-to-Top Plate Connections (cont.)

SDWC Rafter/Truss-to-Top Plate Connections Utilizing Two-Screw Configurations

Allowable loads for the SDWC Truss screws when installed from the underside of the top plate and from the face of the rafter/truss using a two-screw configuration per the detail configurations shown on the next page.

SDWC – Allowable Loads for Rafter/Truss-to-Top Plate Two-Screw Connections (See configuration illustrations on next page)

Configuration	Size (in.)	Model No.	Thread Length (in.)	Quantity Required	Allowable Loads (lb.)					
					DFL/SP			SPF/HF		
					Uplift	F_1	F_2	Uplift	F_1	F_2
A	0.152 x 6	SDWC15600	5¾	2	1,200	685	995	1,045	495	670
B					1,195	680	925	1,195	405	680
C					905	535	790	850	330	595
D					1,115	645	920	960	385	610

1. Loads have been increased for wind and earthquake loading (C_D=1.6) with no further increase allowed; reduce where other loads govern.
2. For Uplift Connection Load Path, the designer shall verify complete continuity of the uplift load path.
3. When cross-grain tension cannot be avoided, supplemental reinforcement shall be considered by the Designer.
4. The SDWC screws shall not interfere with other fasteners or truss plates. Where truss plates must be penetrated for Configuration D, a Truss Designer approval is required in accordance with ANSI/TPI 1-2007/2014, Section 7.5.3.4 and 8.9.2. To predrill through truss plate, use a ⅛" drill bit.
5. The metal installation guide provided with the screw is angled at 22.5° and can be used for Configurations C and D; proper installation angles for all configurations are the responsibility of the installer.
6. SDWC screws must be offset min. ¼" from top plate splices for full values.
7. Loads assume minimum overhang of 3½".
8. When a screw is loaded simultaneously in more than one direction, the allowable load must be evaluated using the unity equation: (Design Uplift ÷ Allowable Uplift) + (Design F1 ÷ Allowable F1) + (Design F2 ÷ Allowable F2) ≤ 1.0. The three terms in the unity equation represent the possible generated force directions. The number of terms that must be considered for simultaneous loading is the sole discretion of the Designer and depends on the method of calculating wind forces and the utilization of the screws within the structural system.
9. An SDWC screw may be used in each ply of two- or three-ply rafters or trusses. The allowable uplift load for each screw shall be multiplied by 0.90, but may be limited by the capacity of the plate or the connection between the top plate to the framing below. SDWC screws in multi-ply assemblies must be spaced a minimum of 1½" o.c.

C-F-2019TECHSUP ©2019 SIMPSON STRONG-TIE COMPANY INC.

Strong-Drive® SDWC TRUSS Screw for Rafter/Truss-to-Top Plate Connections (cont.)

SDWC Rafter/Truss-to-Top Plate Two-Screw Connections

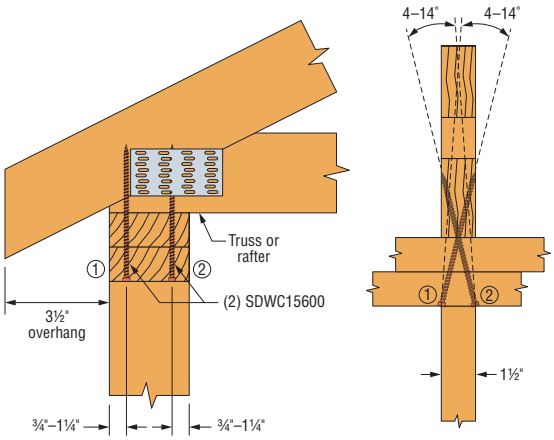

Configuration A:
Truss Aligned with Stud
Install through Top Plate into Rafter/Truss

Both screws installed at a 4°–14° angle, offset ¾"–1 ¼" from opposite edges of the top plate.

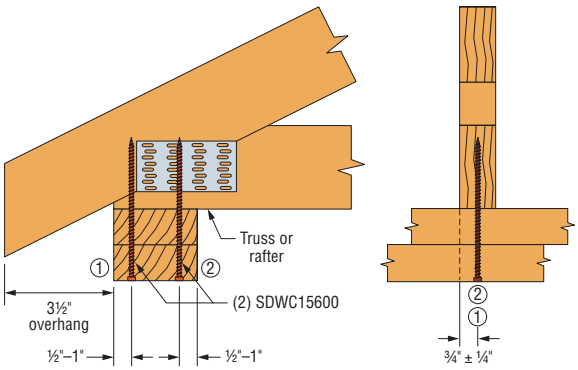

Configuration B:
Truss Offset from Stud
Install through Top Plate into Rafter/Truss

Both screws installed vertically ±5° into the center of the rafter/truss from the underside of the top plate, ½" – 1" from opposite edges of the top plate.

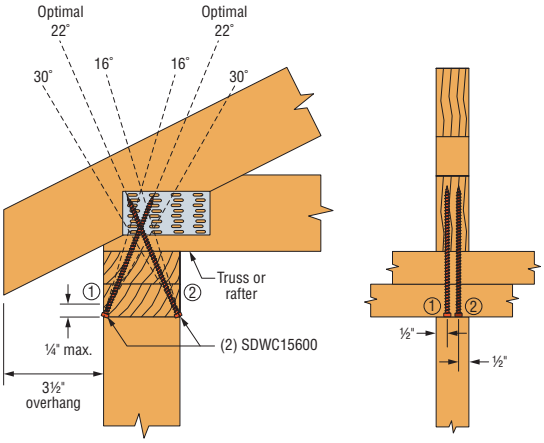

Configuration C:
Install through Top Plate into Rafter/Truss

Both screws installed at a 16°–30° angle, offset ½" from the opposite edges of rafter/truss. Use metal installation guide included in screw kits for optimal 22° installation.

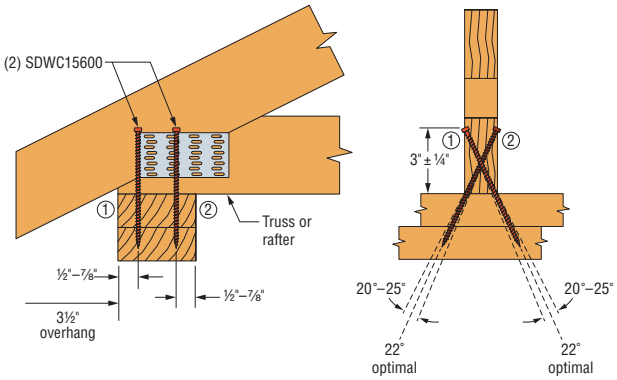

Configuration D:
Install Rafter/Truss to Top Plate

Both screws installed at a 20°-25° angle with a ½" – ⅞" offset from the opposite edges of top plate 3" ± ¼" above top plate. Use metal installation guide included in screw kits for optimal 22° installation. To predrill through truss plates, use a ⅛" drill bit.

C-F-2019TECHSUP ©2019 SIMPSON STRONG-TIE COMPANY INC.

Strong-Drive® SDWC TRUSS Screw for Pre-Engineered Top-of-Wall Assemblies

SDWC Pre-Engineered Top-of-Wall Assemblies for Continuous Uplift Load Path for SPF or Better Wood Framing

The Strong-Drive SDWC TRUSS Screw is designed to fasten roof rafters/trusses to wall plates and wall plates to studs. When used to connect rafters/trusses to top plates, a second connection from top plates to the studs below is necessary in order to maintain a continuous load path as would be required for any connection method. This table provides allowable uplift loads for the five pre-engineered top-of-wall assemblies shown on the next page. These assemblies have been designed and tested to provide a continuous load path from the rafter/truss to the studs in the wall below and account for any reductions that may result from top plate rotation due to eccentric loading. The continuous load path from the bottom of the stud to the supporting structure is by others.

SDWC — Allowable Uplift Load for Pre-Engineered Top-of-Wall Assemblies

Wall Assembly	Rafter/Truss Connection to Top Plates	Top Plate Connection to Studs at 16" On Center[4]	Allowable Rafter/Truss Uplift Load (lb.)					
			2x4 SPF Framing			2x6 SPF Framing		
			Rafter/Truss Spacing			Rafter/Truss Spacing		
			12	16	24	12	16	24
A	1 – SDWC15600	1 – SDWC15600	385	485	485	385	485	485
B		2 – SDWC15600	485	485	485	485	485	485
C		1 – SDWC15600	305	410	485	305	410	485
D		1 – SDWC15600	120	160	240	120	160	240
E		WSP per Designer[3]	145	195	290	105	140	210

1. Allowable loads apply to SPF (G=0.42) or better wood framing.
2. Uplift loads have been increased for wind loading (C_D=1.6) with no further increases allowed; reduce where other loads govern.
3. Wood structural panel (WSP) sheathing used in Wall Type E must be designed and constructed to resist uplift in accordance with the American Wood Council's 2008 or 2015 Special Design Provisions for Wind and Seismic standard.
4. As indicated in table header, studs spaced at 16" o.c. for all assemblies.

C-F-2019TECHSUP ©2019 SIMPSON STRONG-TIE COMPANY INC.

Strong-Drive® SDWC TRUSS Screw for Pre-Engineered Top-of-Wall Assemblies (cont.)

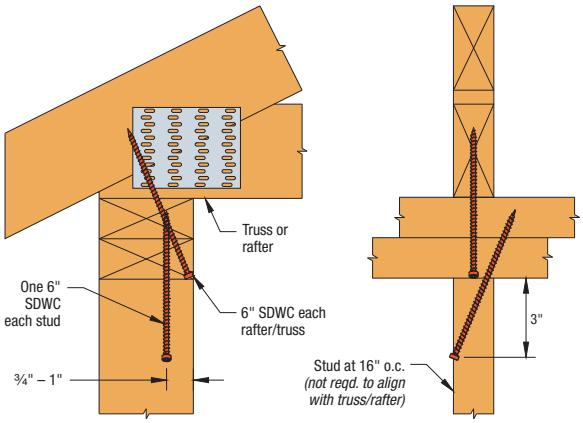

Wall Assembly A

One SDWC as Angled Stud Screw

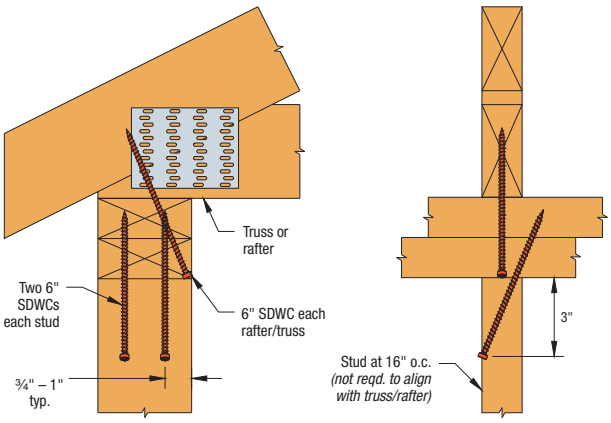

Wall Assembly B

Two SDWC as Angled Stud Screw

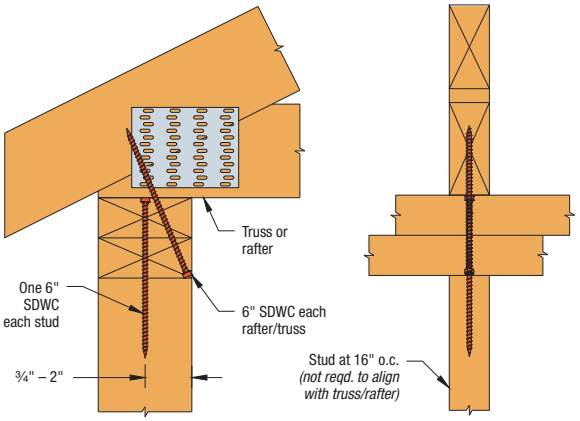

Wall Assembly C

One SDWC as Vertical Stud Screw Through Both Plates

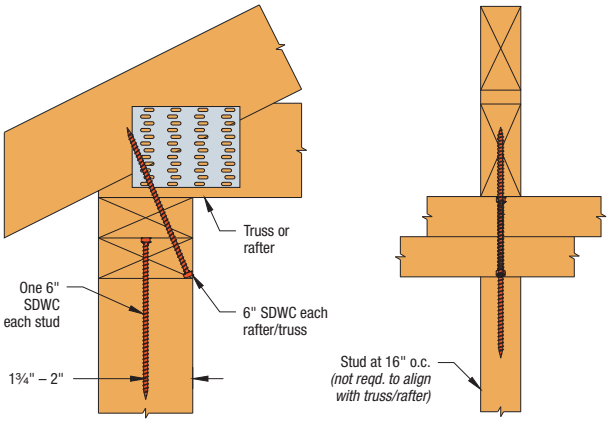

Wall Assembly D

One SDWC as Vertical Stud Screw Through Lower Plates

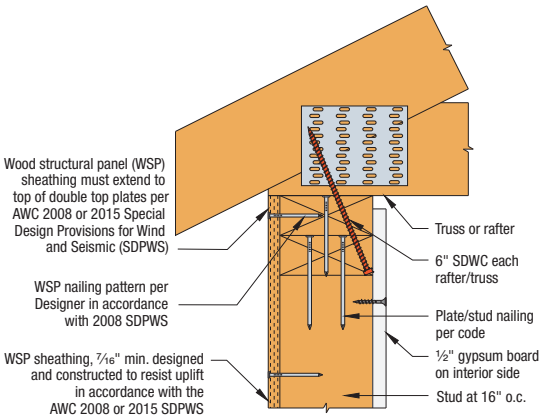

Wall Assembly E

WSP Designed for Uplift

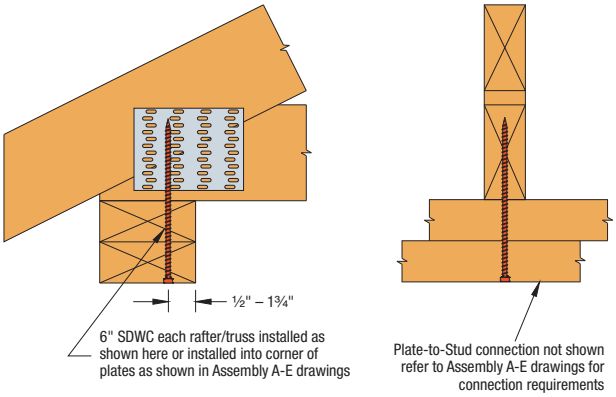

Rafter/Truss Offset from Stud

C-F-2019TECHSUP ©2019 SIMPSON STRONG-TIE COMPANY INC.

Strong-Drive®
SDWC **TRUSS** Screw for Energy Heel Truss-to-Top Plate Connections

Allowable Roof-to-Wall Single-Screw Connection Loads for Raised-Heel/Energy-Heel Trusses and Trusses with No Overhangs

Allowable roof-to-wall connection loads published for the Simpson Strong-Tie® SDWC Truss screw (SDWC15600) are based on a minimum 3½" overhang as shown in the figures below. The following allowable roof-to-wall single-screw connection loads for truss heel configurations that do not meet the minimum overhang requirement, such as a standard heel with no overhang, or a raised-heel condition where the screw only penetrates into the truss bottom chord and the bottom chord does not extend past the top plate.

Testing was performed in accordance with ICC-ES AC233 Annex A, Section A3.0 (*Acceptance Criteria for Alternate Dowel-Type Threaded Fasteners, Approved 2015*) to evaluate the effects of no overhang, with and without truss plates in the region of the SDWC Truss screw. The resulting allowable loads for these conditions are provided in the following table. To achieve the allowable load for the "No Overhang — Reinforced" condition, truss plates must be located as shown in the figures below; otherwise, the allowable load for "No Overhang — Unreinforced" shall be used. Except as noted, all other installation information regarding the SDWC screws for rafter/truss-to-top plate connections as specified in the current *Fastening Systems* catalog shall apply.

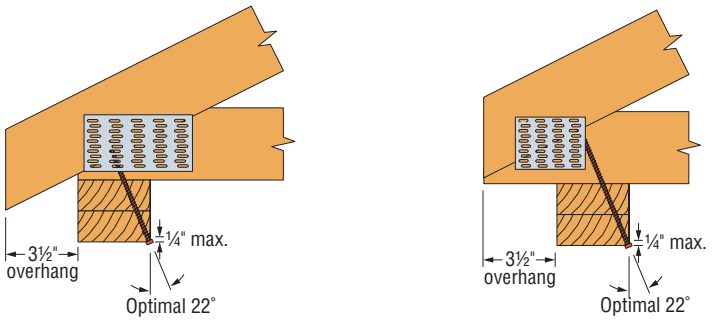

Standard Installation (with minimum 3½" overhang)

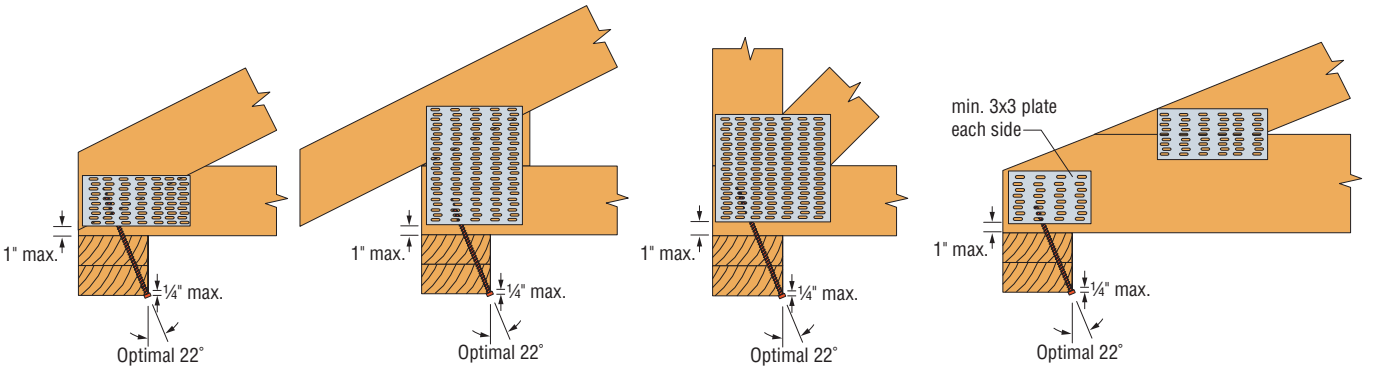

Installation with No Overhang — Reinforced

Note: Truss plates must be located no greater than ¼" or 2" from end of chord on 2x4 or 2x6 or larger walls, respectively.

C-F-2019TECHSUP ©2019 SIMPSON STRONG-TIE COMPANY INC.

Strong-Drive®
SDWC **TRUSS** Screw for Energy Heel Truss-to-Top Plate Connections (cont.)

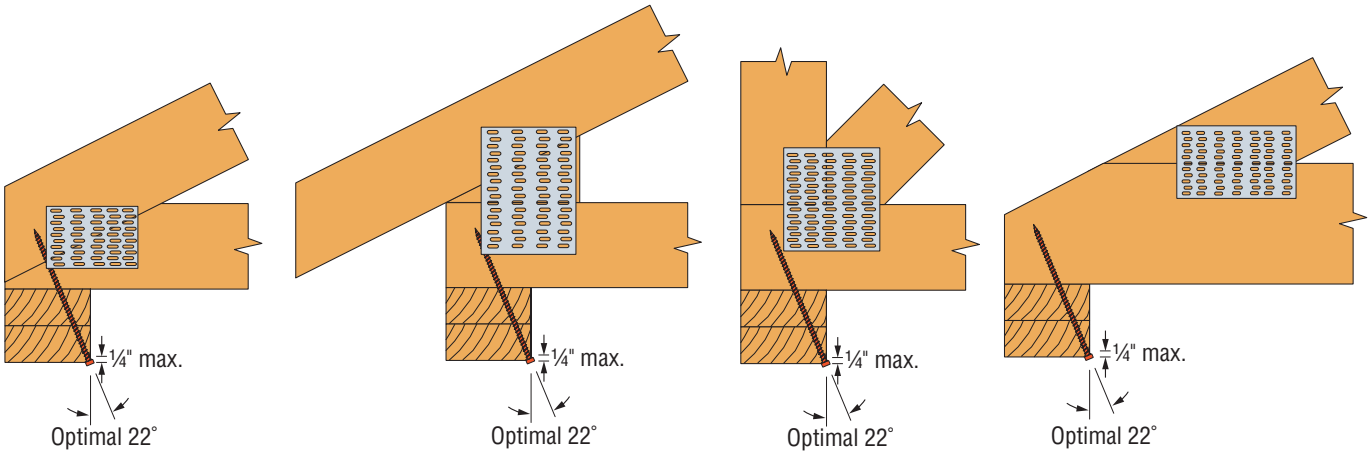

Installation with No Overhang — Unreinforced

SDWC – Allowable Loads

Model No.	Condition	Allowable Loads SPF/HF/DFL/SP (lb.) (160)		
		Uplift	F_1	F_2
SDWC15600	Standard Installation	485	115	190
	No Overhang – Reinforced	450		
	No Overhang – Unreinforced	280		

1. Allowable loads apply to SPF (G=0.42) or better wood framing
2. Loads have been increased for wind and earthquake loading (C_D=1.6) with no further increase allowed; reduce where other loads govern.
3. For Uplift Connection Load Path, the Designer shall verify complete continuity of the uplift load path.
4. When cross-grain tension cannot be avoided, supplemental reinforcement shall be considered by the Designer.
5. SDWC screws are shown installed at the optimal 22° angle, installation angles from 15° to 30° are acceptable. Tabulated loads also apply to any of the five approved truss-to-plate installations using the Quik Stik™ Fastening Tool as specified in F-F-QUIKSTIK.
6. SDWC screws must be offset min. ¼" from top plate splices and must have minimum edge distances per p. 57 or F-F-QUIKSTIK.

C-F-2019TECHSUP ©2019 SIMPSON STRONG-TIE COMPANY INC.

Strong-Drive® SDWC TRUSS Screw for Factory-Built Structures Truss-to-Top Plate Connections

The allowable uplift loads are provided for the Simpson Strong-Tie® SDWC15600 wood screw installed with a ⅝" OSB bearing strip between the truss and top plate.

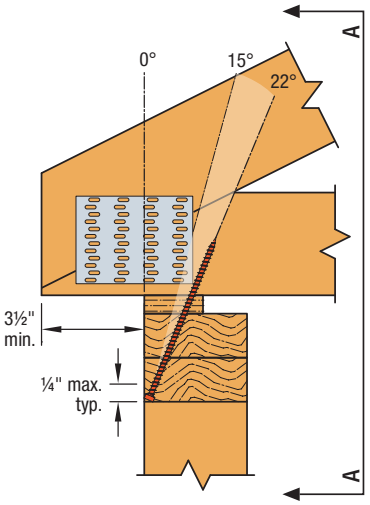

With Overhang Installation

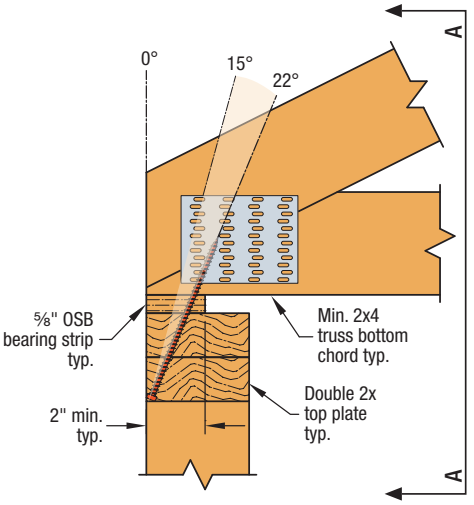

Without Overhang Installation

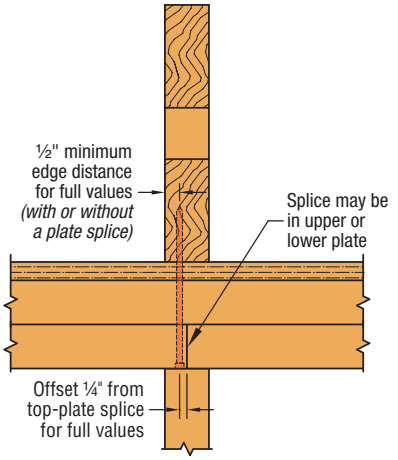

Section A-A
Min. Edge Distance for Top Plate Splice

SDWC – Allowable Uplift Loads for Factory-Built Structures

Size (in.)	Model No.	Thread Length (in.)	Allowable Uplift SPF/DFL/SP (lb.) (160)	
			With Overhang	Without Overhang
0.152 x 6	SDWC15600	5¾	415	370

1. Loads have been increased for wind or earthquake (C_D=1.6); no further increase allowed; reduce where other loads govern.
2. Allowable loads apply to spruce-pine-fir, hem-fir, Douglas fir–larch, and southern pine.
3. Allowable loads are for an SDWC installed per the "With Overhang" or "Without Overhang" installation details.
4. SDWC must be installed on the exterior side of the wall.
5. SDWC must be installed at an angle between 10° and 22½°. Guide provided with screws is at 22½°.
6. For Uplift Continuous Load Path, top-plate-to-stud connections must be located on the exterior side of the wall.
7. Table loads do not apply to trusses with end-grain bearing.
8. Top plate, stud, and top plate splice fastened per applicable building code.

C-F-2019TECHSUP ©2019 SIMPSON STRONG-TIE COMPANY INC.

Strong-Drive® SDWC TRUSS Screw for Boundary Blocking-to-Top Plate Connections

The SDWC was tested and evaluated to establish allowable lateral loads bewteen wall plates and boundary members in a roof diaphragm.

SDWC — Allowable Shear Loads (F_1) for Boundary Member/Blocking-to-Wall Connections — DFL, SP, SPF, HF

Configuration	Size (in.)	Model No.	Nominal Top Plate Thickness (in.)	Thread Length (in.)	Allowable Loads per Screw (lb.) 2x Boundary Member/Blocking	
					DFL/SP	SPF/HF
					F_1	F_1
A	0.152 x 4½	SDWC15450	(2) 2x	4¼	295	270
B					175	160
A	0.152 x 6	SDWC15600		5¾	540	495
B					440	405

1. Allowable loads are based on testing per ICC-ES AC233 and are limited to parallel-to-grain loading.
2. Allowable loads are shown at the wood load duration factor of C_D = 1.60.
3. Minimum spacing of the SDWC is 5" o.c., minimum end distance is 5", and minimum edge distance or installation angle as shown in configurations A and B.
4. Double top plate is required to be independently fastened per the code.
5. Minimum of (2) SDWC fasteners required per individual boundary member/blocking.
6. For species and grades of framing other than DFL/SP, reduced allowable loads shall be determined by the specific gravity adjustment factor of 1-(0.5 – G); where G is the specific gravity referenced from the NDS.
7. SDWC is driven flush to top plate surface.

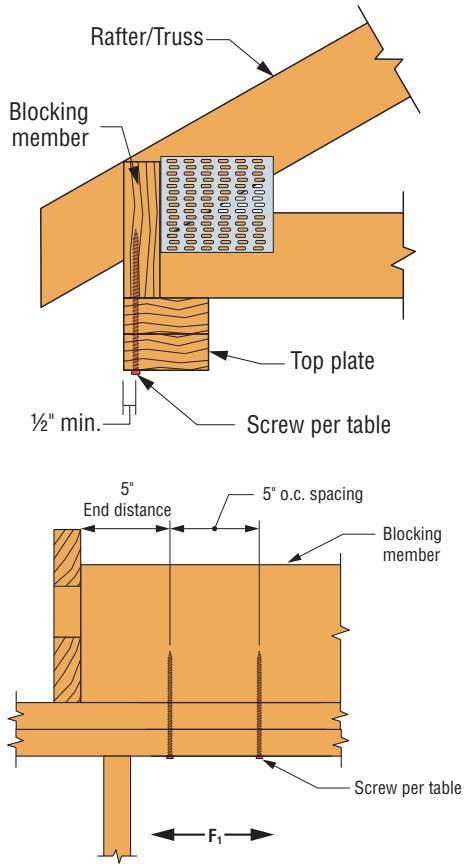

Configuration A

Between Studs — Vertical Installation (±5°)

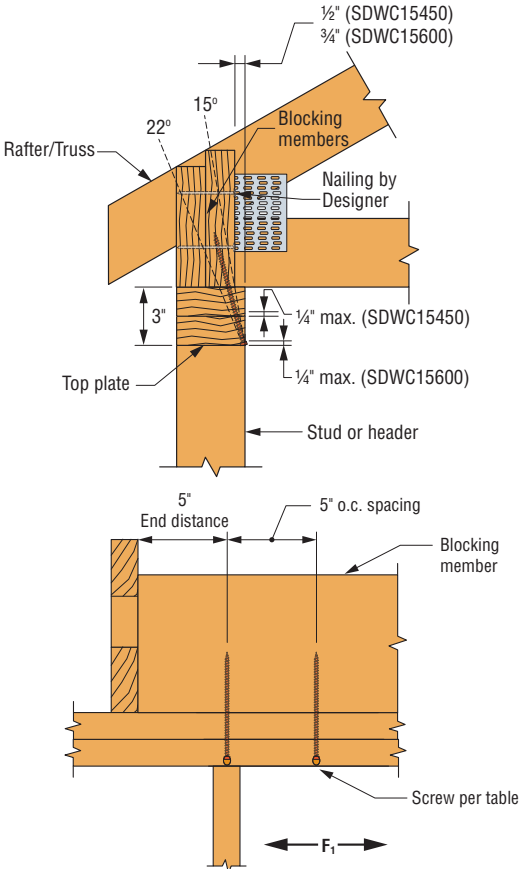

Configuration B

Aligned with Studs — Angle Installation (15° – 22°)

Note: *Screw not aligned with stud/header, use vertical installation as shown in Configuration A (Configuration B load applied).*

C-F-2019TECHSUP ©2019 SIMPSON STRONG-TIE COMPANY INC.

Strong-Drive® SDWC TRUSS Screw for Wide Face of Stud-to-Plate Connections

SDWC — Allowable Loads for Wide Face of Stud-to-Plate Connections – DFL, SP, SPF, HF

Size (in.)	Model No.	No. of Screws Installed	Thread Length (in.)	Nominal Plate Thickness (in.)	Allowable Loads (lb.)			
					DFL/SP		SPF/HF	
					Uplift	F_2	Uplift	F_2
0.152 x 4½	SDWC15450	1	4¼	2x	360	215	310	153
		2			690	390	595	280
		3			1,035	585	895	420
0.152 x 6	SDWC15600	1	5¾	2x	450	189	310	153
		2			865	345	595	280
		3			1,295	515	895	420
0.152 x 6	SDWC15600	1	5¾	(2) 2x	590	177	510	152
		2			1,135	320	980	275
		3			1,700	485	1,470	415

1. Loads have been increased for wind and earthquake loading (C_D = 1.6) with no further increases allowed; reduce where other loads govern.
2. Allowable loads are for SDWC installed per the installation instructions.
3. The SDWC15450 is to be installed through the face of 2x stud into a single 2x bottom plate over a concrete/masonry foundation.
4. The SDWC15600 is to be installed through the face of 2x stud into a single 2x bottom plate over a wood floor system.
5. The SDWC15600 is to be installed through the face of 2x stud into a double 2x top or bottom plate.
6. Double-top plates shall be fastened together as required by applicable code.
7. When a screw is loaded simultaneously in more than one direction, the allowable load must be evaluated using the unity equation: (Design Uplift ÷ Allowable Uplift) + (Design F1 ÷ Allowable F1) + (Design F2 ÷ Allowable F2) ≤ 1.0. The three terms in the unity equation represent the possible generated force directions. The number of terms that must be considered for simultaneous loading is the sole discretion of the Designer and depends on the method of calculating wind forces and the utilization of the screws within the structural system.

Stud-to-Plate Connections

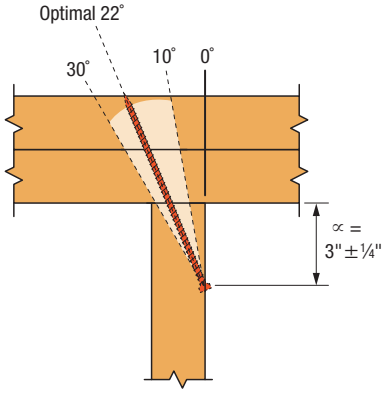

Stud-to-Top Plate Connection
(this application requires SDWC15600)

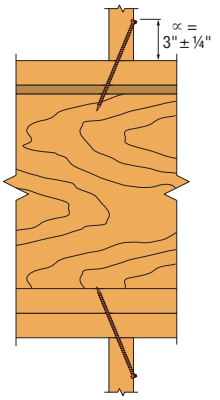

Stud-to-Bottom Plate Connection Over Wood Floor
(this application requires SDWC15600)

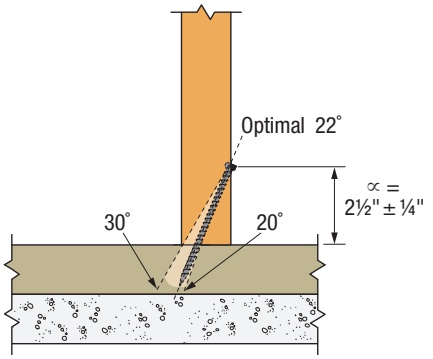

Stud-to-Bottom Plate Connection Over Concrete/Masonry Foundation
(this application requires SDWC15450)

Spacing Requirements

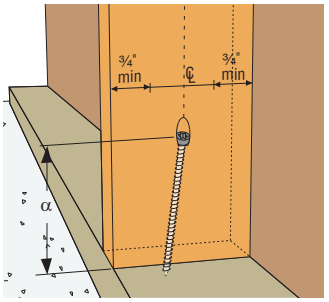

One Screw
One fastener driven in wide face of 2x4, 2x6 or 2x8; maintain minimum edge distance of ¾".

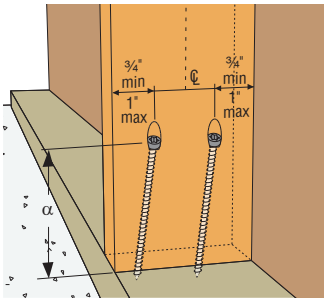

Two Screws
Two fasteners driven into same wide face of 2x4, 2x6 or 2x8. Maintain minimum edge distance of ¾" and maximum edge distance of 1" for proper spacing between fasteners.

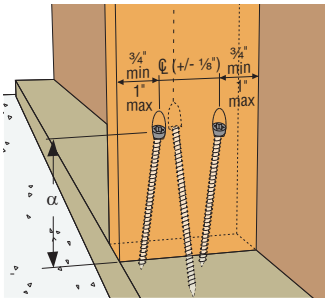

Three Screws
Two fasteners driven into same wide face of 2x4, 2x6 or 2x8. Maintain minimum edge distance of ¾" and maximum edge distance of 1" for proper spacing between fasteners.

One fastener driven within ⅛" of centerline of 2x4, 2x6 or 2x8 on OPPOSITE wide face.

C-F-2019TECHSUP ©2019 SIMPSON STRONG-TIE COMPANY INC.

Strong-Drive® SDWC TRUSS Screw for Narrow Face of Stud-to-Plate Connections

The Strong-Drive SDWC Truss screw provides an easy-to-install, high-capacity solution for stud-to-bottom plate or stud-to-top plate(s) connections. This table provides additional allowable load information for the SDWC screws when installed through the narrow face of the stud. The allowable loads are for SDWC screws installed per the details shown on the next page.

SDWC — Allowable Loads for Narrow Face of Stud-to-Plate Connections

Type of Connection	Size (in.)	Model No.	Quantity Required	Thread Length (in.)	Nominal Plate Thickness (in.)	Allowable Loads (lb.)			
						DFL/SP		SPF/HF	
						Uplift	F2	Uplift	F2
1	0.152 x 6	SDWC15600	1	5¾	(2) 2x	590	170	510	145
2	0.152 x 6	SDWC15600	1	5¾	2x	450	155	310	135
3	0.152 x 4½	SDWC15450	1	4¼	2x	295	150	255	130

1. Loads have been increased for wind and earthquake (C_D=1.6). No further increase is allowed; reduce when other loads govern.
2. The SDWC15600 is to be installed through the narrow face of 2x stud into a single 2x bottom plate over a wood floor system.
3. The SDWC15450 is to be installed through the narrow face of 2x stud into a single 2x bottom plate over a concrete/masonry foundation.
4. Double-top plates shall be fastened together as required by applicable Code.
5. When a screw is loaded simultaneously in more than one direction, the allowable load must be evaluated using the unity equation: (Design Uplift ÷ Allowable Uplift) + (Design F1 ÷ Allowable F1) + (Design F2 ÷ Allowable F2) ≤ 1.0. The three terms in the unity equation represent the possible generated force directions. The number of terms that must be considered for simultaneous loading is the sole discretion of the Designer and depends on the method of calculating wind forces and the utilization of the screws within the structural system.
6. One SDWC screw per stud maximum when installed in the narrow face of the stud. Where the SDWC screws are installed on multiple adjacent studs, the minimum spacing between screws must be 1½". The allowable uplift load for each screw shall be multiplied by 0.90, but may be limited by the capacity of the plate.
7. For Uplift Continuous Load Path, connections in the same area (i.e., truss to plate connector and plate to stud connector) must be on the same side of the wall.

C-F-2019TECHSUP ©2019 SIMPSON STRONG-TIE COMPANY INC.

Strong-Drive® SDWC TRUSS Screw for Narrow Face of Stud-to-Plate Connections (cont.)

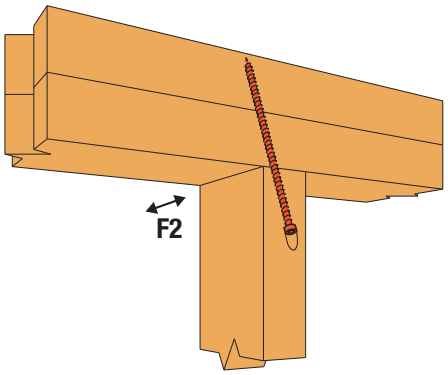

1 **Narrow Face of Stud-to-Top Plate Connection**
(this application requires SDWC15600)

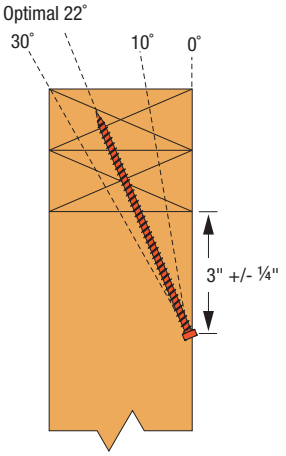

Installation Angle Range

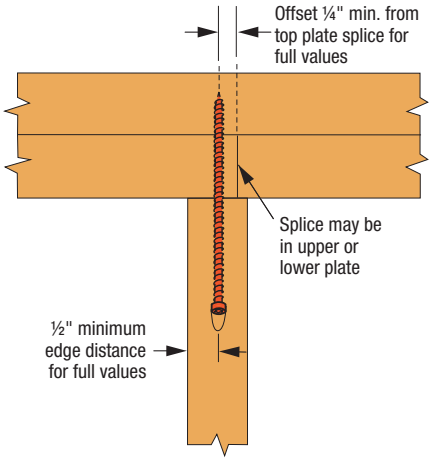

Min. Edge Distance and Splice Offset Requirements

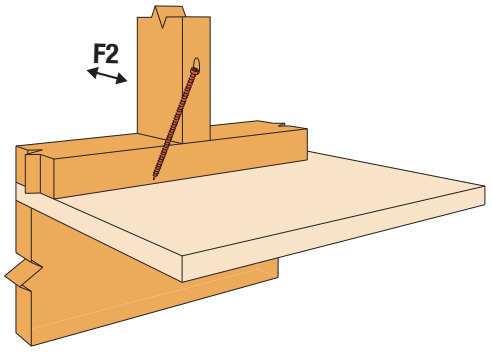

2 **Narrow Face of Stud-to-Bottom Plate Connection Over Wood Floor**
(SDWC15600 shown)

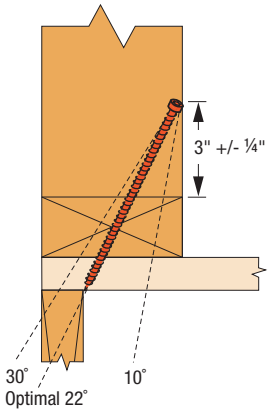

Installation Angle Range

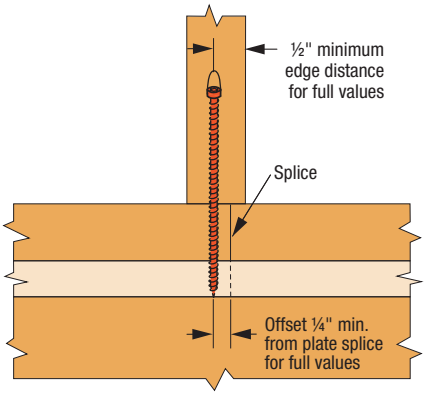

Min. Edge Distance and Splice Offset Requirements

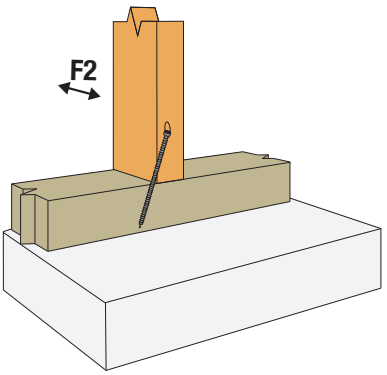

3 **Narrow Face of Stud-to-Bottom Plate Connection Over Masonry/Concrete Foundation**
(the application requires SDWC15450)

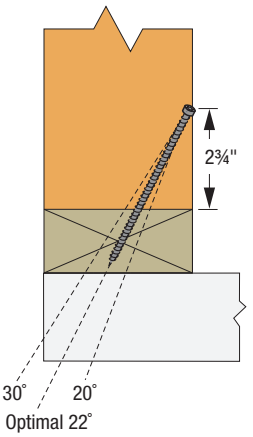

Installation Angle Range

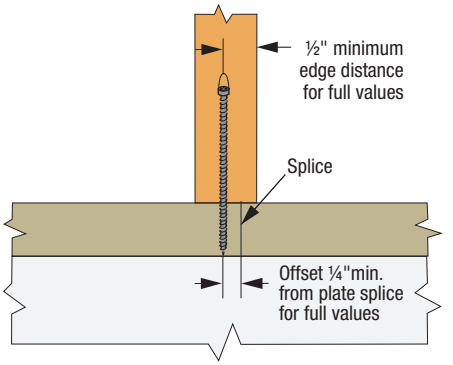

Min. Edge Distance and Splice Offset Requirements

C-F-2019TECHSUP ©2019 SIMPSON STRONG-TIE COMPANY INC.

Quik Stik™

Rafter/Truss-to-Top Plate Installation Instructions

For the Quik Stik Rafter and Truss Fastening System

Quik Stik and Strong-Drive® SDWC Truss screws are designed to work together for a safe, reliable solution from the leader in structural fastening.

For more information, see p. 85, C-F-2019 Fastening Systems Catalog; Allowable Loads for Installations 1–5 are shown on p. 56.

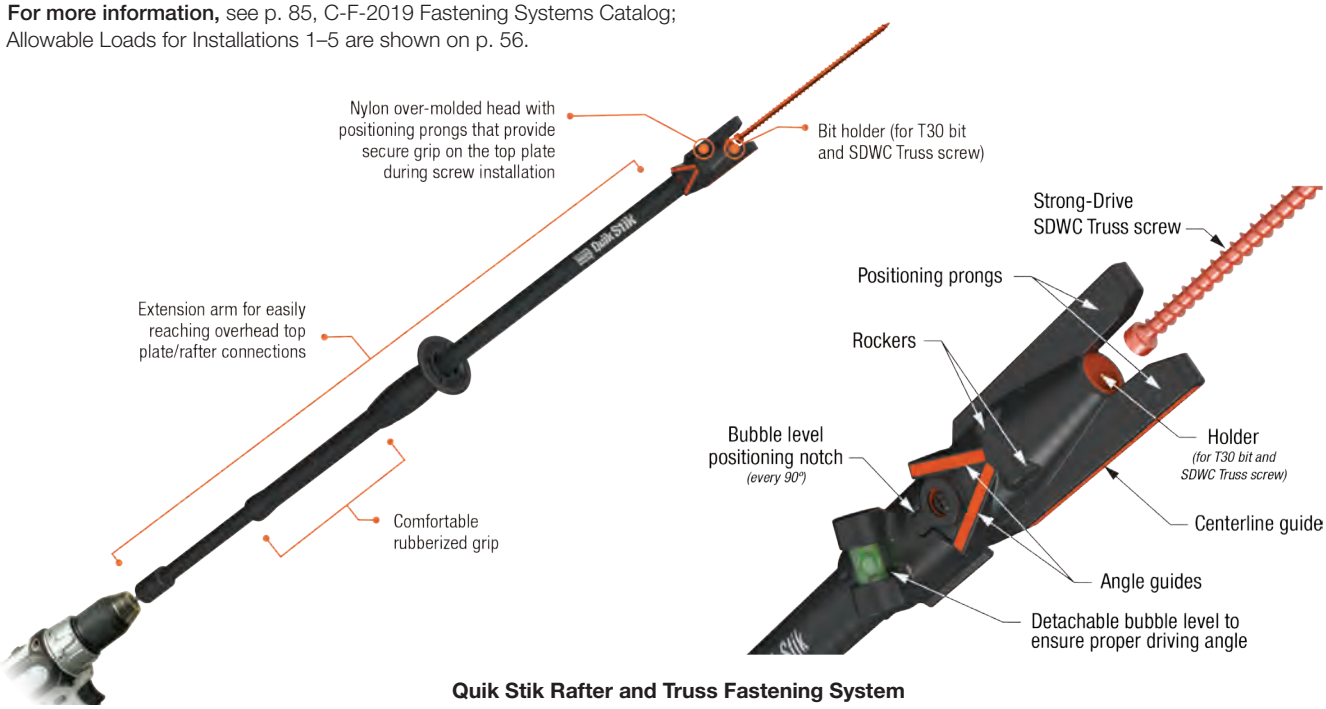

Quik Stik Rafter and Truss Fastening System

Installation Instructions 1 — Rafter/Truss Offset from Stud: Fasten Straight up Through Double Top Plate

These instructions apply to rafter/truss-to-top-plate connections.

These instructions apply only if the rafter/truss is offset from the stud below.

Note: SDWC screws install best with a minimum 18V (if cordless) drill using the matched-tolerance bit included in the SDWC15600KT or Quik Stik system using the included bit.

Installation Steps: Position the Quik Stik head directly under the top plate so that the screw is pointing toward the centerline of the rafter/truss.

Ensure the Quik Stik centerline guide is vertically perpendicular to the top plate.

Drive the SDWC Truss screw straight up through the top plates and into the rafter/truss until the head is flush with the board's surface.

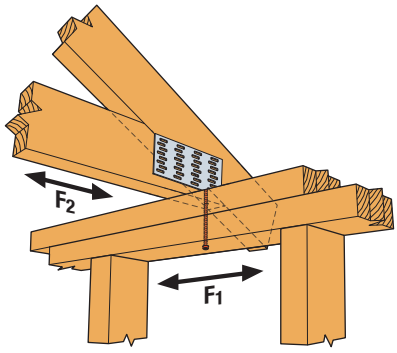

Optional SDWC Installation — Truss Offset from Stud
(rafter offset from stud similar)

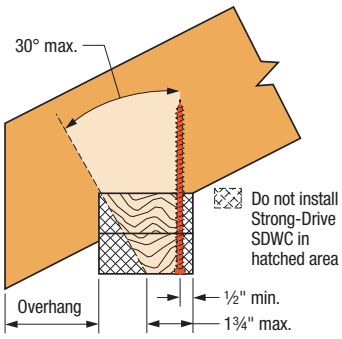

Allowable Installation Range
(rafter/truss offset from stud only)

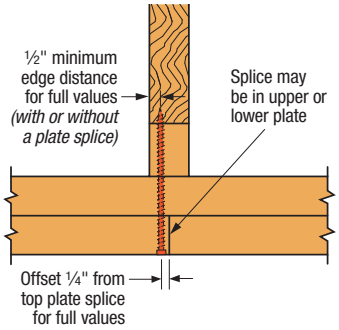

Min. Edge Distance for Top Plate Splice

C-F-2019TECHSUP ©2019 SIMPSON STRONG-TIE COMPANY INC.

Quik Stik™

Installation Instructions (cont.)

Installation Instructions 2 — Rafter/Truss Offset from Stud: Fasten from Front-Bottom Corner of Double Top Plate

These instructions apply only if the rafter/truss is offset from the stud below and the installation of the screw is from the corner of the top plate.

Installation Steps: Position the Quik Stik so that the positioning prongs straddle the bottom edge of the double top plate and with the SDWC screw set to enter the bottom member along its edge.

Ensure the Quik Stik centerline guide points to the center of the rafter/truss and that the orange angle guide is perpendicular to the top plate (alternatively, check to ensure that the bubble is visible in the level window).

Drive SDWC screw through the top plates and into the rafter/truss.

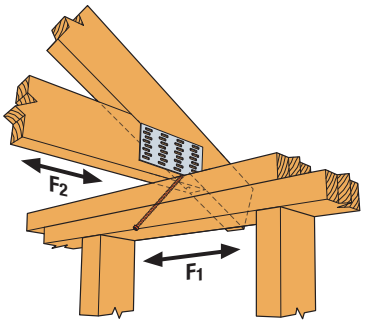

Optional SDWC Installation — Truss Offset from Stud

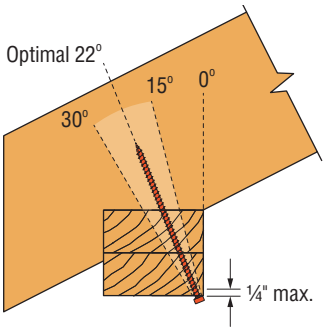

Installation Angle Limit

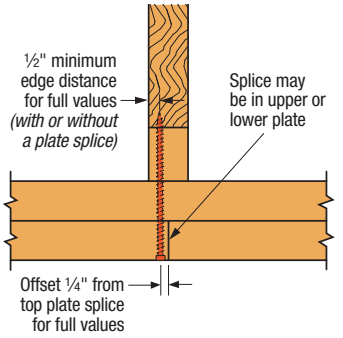

Mininum Edge Distance for Top-Plate Splice

Installation Instructions 3 — Rafter/Truss Aligned with Stud: Fasten from Wide Face of Stud

These instructions apply to rafter/truss-to-top-plate connections utilizing one or two screws when installed from the underside of the top plate and from the wide face of the rafter/truss.

Installation Steps: Position the Quik Stik head so that its positioning prongs are in contact with the framing where the top plate meets the wide face of the stud.

Sight along the Quik Stik centerline guide to align the tool with the centerline of the rafter/truss. If the rafter/truss is offset from the stud, be sure to install the screw on the overhanging side.

Adjust the installation angle of the head to align with the rafter/truss centerline.

For a one screw installation: position the screw in the central one third of the wide face.

For a two-screw installation: see Configuration A on p. 59 for screw locations and edge distances.

Drive the SDWC Truss screw through the top plates and into the rafter/truss.

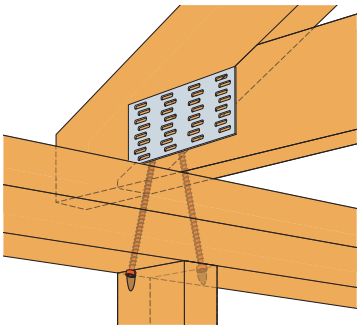

Optional SDWC Installation — Two-Screw Wide-Face Installation Shown

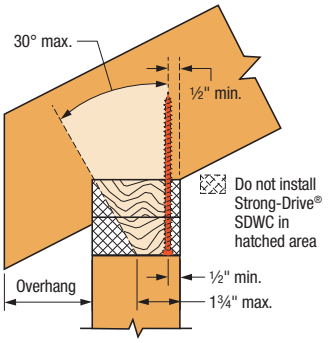

Allowable Installation Range
(rafter/truss offset from stud only)

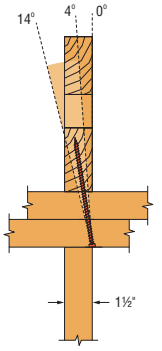

Allowable Installation Range
(front view)

C-F-2019TECHSUP ©2019 SIMPSON STRONG-TIE COMPANY INC.

Quik Stik™

Installation Instructions (cont.)

Installation Instructions 4 — Rafter/Truss Aligned with Stud: Fasten from Narrow Face of Stud

These instructions apply if the rafter/truss is aligned with the stud below or if there is blocking directly below the top plate.

Installation Steps: Put the point of the screw in the seam between the top plate and stud — or on the desired spot for installation — and pivot the whole tool up past 45°.

Drive the SDWC Truss screw point into the wood surface so that the first two screw threads embed into the wood. Pivot the tool downward until the bubble appears in the level window, and continue to drive the SDWC Truss screw through the top plates and into the rafter/truss.

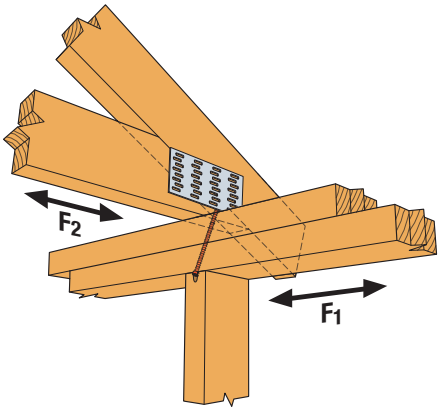

Optional SDWC Truss Screw Installation — Truss Aligned with Stud
(rafter aligned with stud similar)

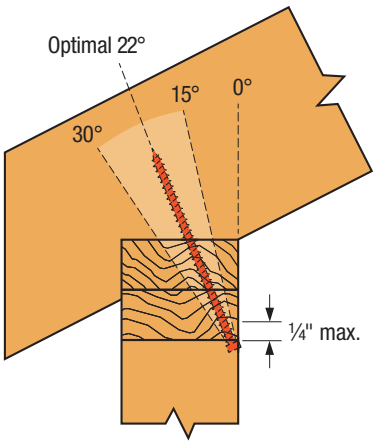

Installation Angle Limit

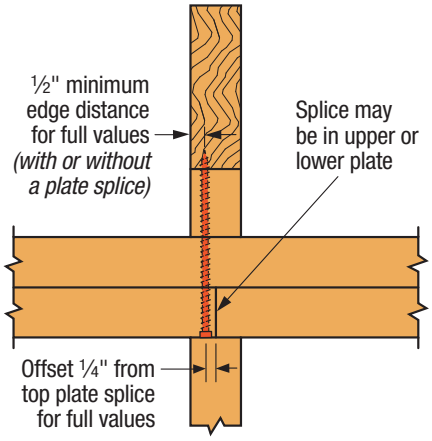

Minimum Edge Distance for Top-Plate Splice

C-F-2019TECHSUP ©2019 SIMPSON STRONG-TIE COMPANY INC.

Quik Stik™

Installation Instructions (cont.)

Installation Instructions 5 — Rafter/Truss Aligned with Stud: Fasten from Corner of Stud

These instructions apply if the rafter/truss is aligned with the stud below, and the installation of the screw is from the corner where the stud meets the top plate below the rafter/truss. The configuration would be similar to that of Installations 2 and 3.

Installation Steps: Position Quik Stik so the positioning prongs straddle the front corner where the stud meets the top plate. Ensure the centerline guide is pointed at the center of the rafter/truss.

Align the angle guide with the vertical edge of the stud (or if using the bubble level, the bubble should appear in the level's window).

Drive the SDWC Truss screw through the top plates and into the rafter/truss until the screw head is flush with the bottom of the top plate.

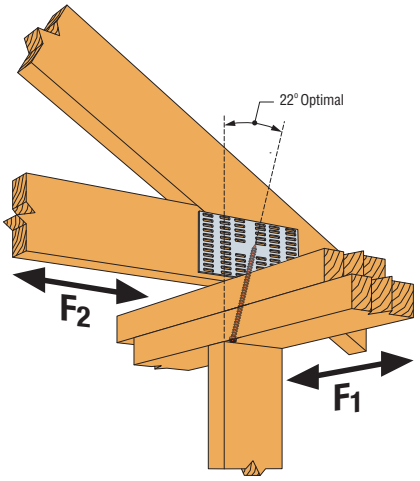

Optional SDWC Truss Screw Installation — Truss Aligned with Stud
(rafter aligned with stud similar)

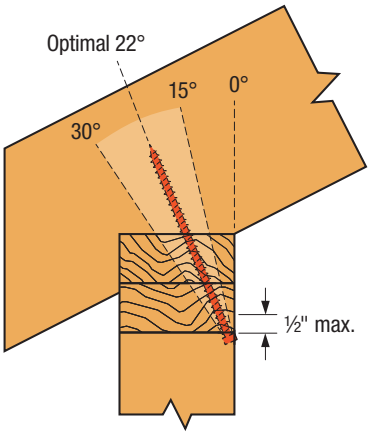

Installation Angle Limit
(side view)

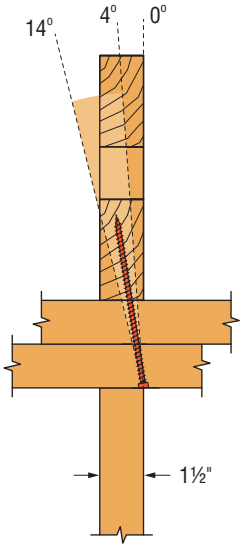

Installation Angle Limit
(front view)

C-F-2019TECHSUP ©2019 SIMPSON STRONG-TIE COMPANY INC.

Sole/Top Plate-to-Rim Fastening

Strong-Drive® SDWC TRUSS Screw

For more information, see p. 84, C-F-2019 Fastening Systems Catalog

SDWC — Allowable Shear Loads for Sole-to-Rim Connections

Size (in.)	Model No.	Nominal Sole Plate Thickness (in.)	Minimum Penetration into Rim Board (in.)	Reference Allowable Loads (lb.) per Screw							
				2x DFL/SP Rim Board		2x SPF/HF Rim Board		1¼" Min. LVL Rim Board		1¼" Min. LSL Rim Board	
				DFL/SP Sole Plate	SPF/HF Sole Plate	DFL/SP Sole Plate	SPF/HF Sole Plate	DFL/SP Sole Plate	SPF/HF Sole Plate	DFL/SP Sole Plate	SPF/HF Sole Plate
0.152 x 4.5	SDWC15450	2x	2.25	235	205	205	205	255	225	275	215
0.152 x 6	SDWC15600	2x, 3x, (2)-2x	2.25	235	205	205	205	255	225	275	215

1. Allowable loads are based on testing per ICC-ES AC233 and are limited to parallel-to-grain loading.
2. Allowable loads are shown at the wood load duration factor of C_D = 1.00. Loads may be increased for load duration by the building code up to a C_D = 1.60.
3. Minimum spacing of the SDWC is 6" o.c., minimum end distance is 6", and minimum edge distance is ⅝".
4. Wood structural panel up to 1⅛" thick is permitted between the sole plate and rim board provided it is fastened to the rim board per code and the minimum penetration of the screw into the rim board is met.
5. A double 2x sole plate and/or top plate is permitted provided it is independently fastened per the code and the minimum screw penetration per the table is met.
6. Minimum rim board height shall be 9¼" when using fasteners for sole plate and top plate fastening.
7. Sole-to-rim load can be achieved without a wall below.

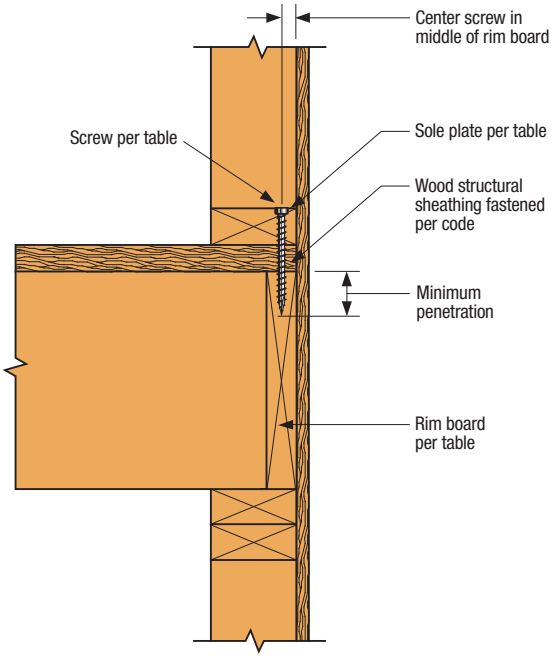

Sole-to-Rim Board Assembly
(Other fasteners not shown for clarity)

C-F-2019TECHSUP ©2019 SIMPSON STRONG-TIE COMPANY INC.

Strong-Drive® SDWV SOLE-TO-RIM Screw

Sole-to-Rim Attachment

The Simpson Strong-Tie® SDWV Sole-to-Rim structural wood screws may be used to attach a sole plate to a rim board according to the following table. The SDWV Sole-to-Rim screw coating is intended for dry service, low corrosion applications and is suitable for use with FRT in dry-service conditions.

Features:

- Large 0.400"-diameter head for increased holding power
- Fast start point with helical ridge for fast, easy, low-torque installation
- Variable thread design, optimized for 2x nominal dimension lumber

For more information, see p. 87, C-F-2019 Fastening Systems Catalog

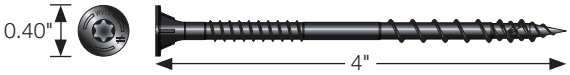

SDWV — Allowable Shear Loads for Sole-to-Rim Connection

Size	Model No.	Sole Plate Nominal Thickness (in.)	Minimum Penetration into Rim Board (in.)	Reference Allowable Loads (lb.) per Screw							
				2x Min. DFL/SP Rim Board		2x Min. SPF/HF Rim Board		1¼" Min. LVL Rim Board		1¼" Min. LSL Rim Board	
				DFL/SP Sole Plate	SPF/HF Sole Plate	DFL/SP Sole Plate	SPF/HF Sole Plate	DFL/SP Sole Plate	SPF/HF Sole Plate	DFL/SP Sole Plate	SPF/HF Sole Plate
0.135 x 4	SDWV13400	2x	1.75	220	175	165	160	185	165	185	175

1. Allowable loads are based on testing per ICC-ES AC233 and are limited to parallel-to-grain loading. The equivalent specific gravity for the LVL and LSL having a minimum 0.8E designation for edge fastening is 0.50.
2. Allowable loads are shown at the wood load duration factor of C_D = 1.00. Loads may be increased for load duration as permitted by the building code up to a C_D = 1.60.
3. Minimum spacing of the SDWV is 6" o.c., minimum end distance is 6", and minimum edge distance is ⅝".
4. Wood structural panel up to 23/32" thick is permitted between the sole plate and rim board provided it is fastened to the rim board per code and the minimum penetration of the screw into the rim board is met.
5. Minimum rim board height shall be 9¼" when fastening a sole plate and a single top plate to the rim board with SDWV screws.
6. Sole-to-rim loads can be achieved without a wall below.

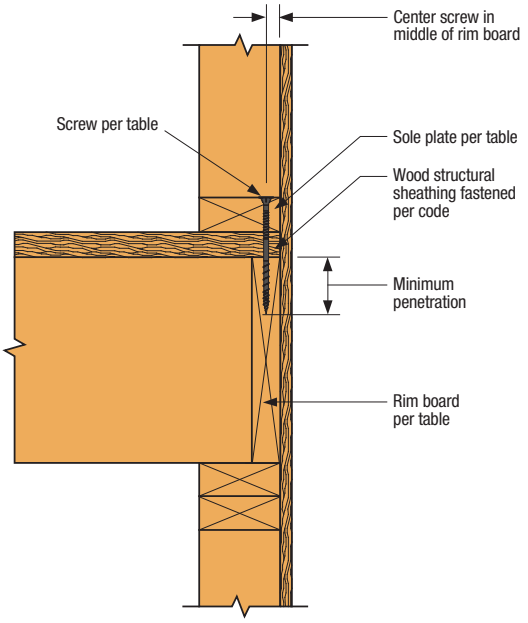

Sole-to-Rim Board Assembly
(Other fasteners not shown for clarity)

C-F-2019TECHSUP ©2019 SIMPSON STRONG-TIE COMPANY INC.

Strong-Drive® SDWS TIMBER Screw

Sole-to-Rim Connections

For more information, see p. 53, C-F-2019 Fastening Systems Catalog

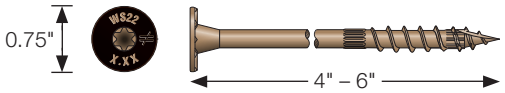

SDWS Timber Screw — Allowable Shear Loads for Sole-to-Rim Connections

Size (in.)	Model No.	Sole Plate Nominal Thickness (in.)	Minimum Penetration into Rim Board (in.)	Reference Allowable Loads (lb.) per Screw							
				2x DFL/SP Rim Board		2x SPF/HF Rim Board		1¼" Min. LVL Rim Board		1¼" Min. LSL Rim Board	
				DFL/SP Sole Plate	SPF/HF Sole Plate	DFL/SP Sole Plate	SPF/HF Sole Plate	DFL/SP Sole Plate	SPF/HF Sole Plate	DFL/SP Sole Plate	SPF/HF Sole Plate
0.22 x 4	SDWS22400DB	2x	1.75	345	295	295	295	275	275	275	275
0.22 x 5	SDWS22500DB	2x	2	345	295	295	295	275	275	275	275
0.22 x 6	SDWS22600DB	2x, 3x, (2)-2x	2	345	295	295	295	275	275	275	275

1. Allowable loads are based on testing per ICC-ES AC233 and are limited to parallel-to-grain loading.
2. Allowable loads are shown at the wood load duration factor of C_D = 1.00. Loads may be increased for load duration by the building code up to a C_D = 1.60.
3. Minimum spacing of the SDWS is 6" o.c., minimum end distance is 6", and minimum edge distance is ⅝".
4. Wood structural panel up to 1⅛" thick (²³⁄₃₂" for SDWS22400DB) is permitted between the sole plate and rim board provided it is fastened to the rim board per code and the minimum penetration of the screw into the rim board is met.
5. A double 2x sole plate/top plate is permitted provided it is independently fastened per the code and the minimum screw penetration per the table is met.
6. Minimum rim board height shall be 9¼" when using SDWS screws for sole and top plate fastening.
7. Sole-to-rim loads can be achieved without a wall below.

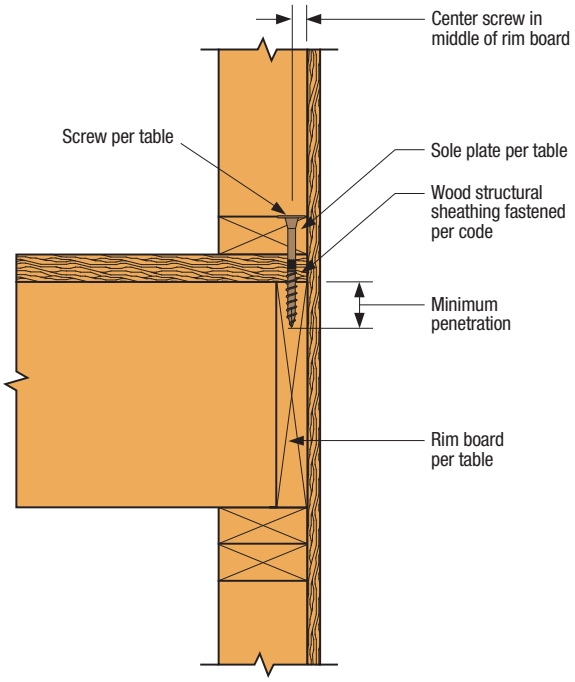

Sole-to-Rim Board Assembly
(Other fasteners not shown for clarity)

C-F-2019TECHSUP ©2019 SIMPSON STRONG-TIE COMPANY INC.

Strong-Drive® SDWH TIMBER-HEX Screw

Sole-to-Rim Connections

For more information, see p. 55, C-F-2019 Fastening Systems Catalog

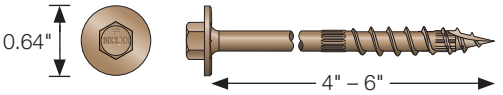

SDWH — Allowable Shear Loads for Sole-to-Rim Connections

Size (in.)	Model No.	Nominal Sole Plate Thickness (in.)	Minimum Penetration into Rim Board (in.)	Reference Allowable Loads (lb.) per Screw							
				2x DFL/SP Rim Board		2x SPF/HF Rim Board		1¼" Min. LVL Rim Board		1¼" Min. LSL Rim Board	
				DFL/SP Sole Plate	SPF/HF Sole Plate	DFL/SP Sole Plate	SPF/HF Sole Plate	DFL/SP Sole Plate	SPF/HF Sole Plate	DFL/SP Sole Plate	SPF/HF Sole Plate
0.195 x 4	SDWH19400DB	2x	1.75	315	295	295	295	255	255	275	275
0.195 x 6	SDWH19600DB	2x, 3x, (2)-2x	2	315	295	295	295	255	255	275	275

1. Allowable loads are based on testing per ICC-ES AC233 and are limited to parallel-to-grain loading.
2. Allowable loads are shown at the wood load duration factor of C_D = 1.00. Loads may be increased for load duration by the building code up to a C_D = 1.60.
3. Minimum spacing of the SDWH is 6" o.c., minimum end distance is 6", and minimum edge distance is ⅝".
4. Wood structural panel up to 1⅛" thick is permitted between the sole plate and rim board provided it is fastened to the rim board per code and the minimum penetration of the screw into the rim board is met.
5. A double 2x sole/top plate is permitted provided it is independently fastened per the code and the minimum screw penetration per the table is met.
6. Minimum rim board height shall be 9¼" when using SDWH fasteners for sole and top plate fastening.
7. Sole-to-rim loads can be achieved with a wall below.

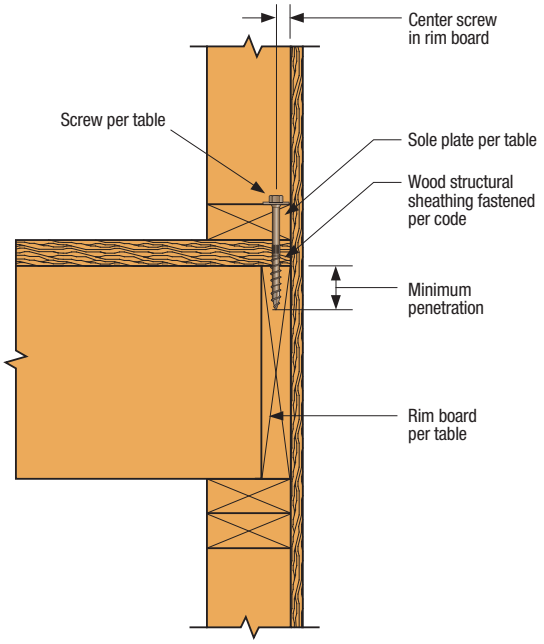

Sole-to-Rim Board Assembly
(Other fasteners not shown for clarity)

C-F-2019TECHSUP ©2019 SIMPSON STRONG-TIE COMPANY INC.

Strong-Drive® SDWS TIMBER Screw and SDWH TIMBER-HEX Screw

Sole Plate/Top Plate to Rim/Blocking Shear Load Transfer with Reduced Fastener Spacing

Strong-Drive SDWS Timber and Strong-Drive SDWH Timber-Hex structural screws may be used to attach a sole plate or top plate to a rim board and blocking material according to the following details and loading information. Allowable loads are based on testing per ICC-ES AC233 and are limited to parallel-to-grain or in-plane-shear loading. Each test assembly consisted of multiple fasteners, a sole plate, sheathing and a rim board or blocking material. Please see the following for allowable load tables.

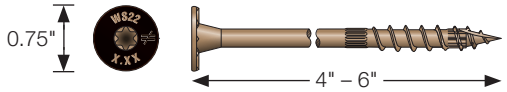

Strong-Drive SDWS TIMBER Screw

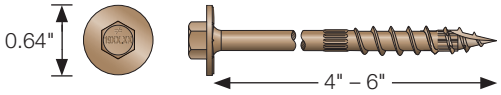

Strong-Drive SDWH TIMBER-HEX Screw

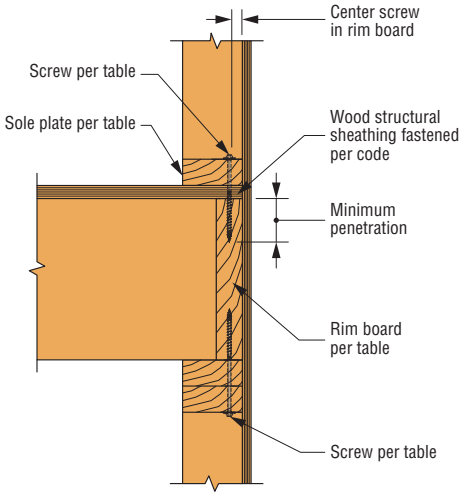

Sole-to-Rim and Top Plate-to-Rim Connection

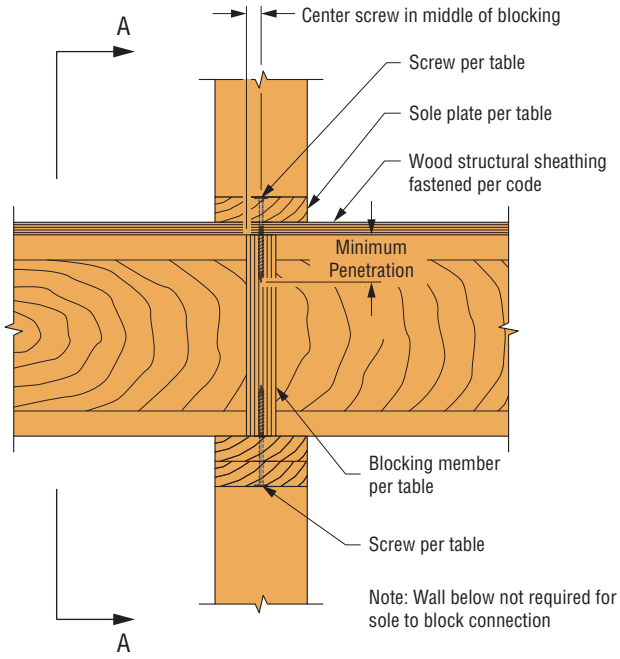

Sole-to-Block and Top Plate-to-Block Connection

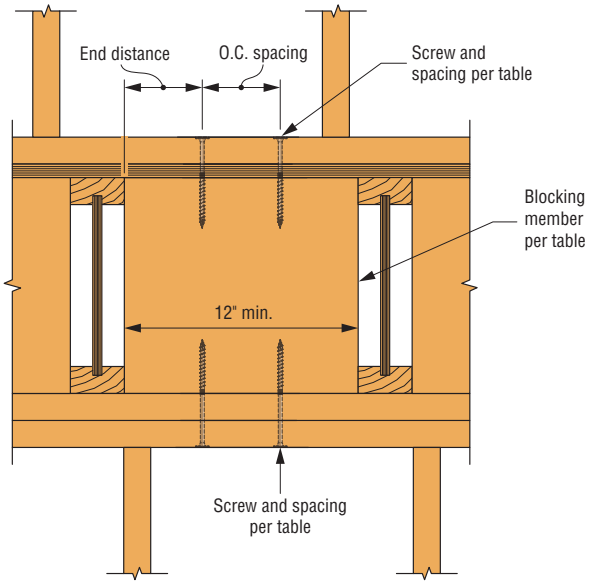

Sole-to-Block and Top Plate-to-Block Connection

C-F-2019TECHSUP ©2019 SIMPSON STRONG-TIE COMPANY INC.

Strong-Drive® SDWS TIMBER Screw and SDWH TIMBER-HEX Screw (cont.)

SDWS Timber/SDWH Timber-Hex Single-Fastener, Allowable Loads for Sole-to-Rim (or Blocking) and Top Plate-to-Rim (or Blocking) Connection

Min. Screw Length (in)	Sole Plate or Top Plate Nominal Thickness		Model No.	Min. Penetration into Rim or Block (in.)	Reference Allowable Shear Loads (lb.) per Screw DFL/SP Sole Plate and Top Plate					
					Rim and Blocking Material					
					2x Min. DFL/SP		1¼" Min. LVL	1¾" Min. LVL	1¼" Min. LSL	1¾" Min. LSL
					6" O.C. 6" End Distance	3" O.C. 3" End Distance	6" O.C. 6" End Distance	4" O.C. 4" End Distance	6" O.C. 6" End Distance	4" O.C. 4" End Distance
4	Sole Plate	2x	SDWH19400DB	1.75	315	220	255	260	275	230
4		2x	SDWS22400DB	1.75	345	240	275	305	275	350
5		2x	SDWS22500DB	2	345	240	275	360	275	345
6		3x	SDWH19600DB	2	315	225	255	260	275	230
6		3x	SDWS22600DB	2	345	240	275	360	275	345
6		(2) 2x	SDWH19600DB	1.75	315	220	255	260	275	230
6		(2) 2x	SDWS22600DB	1.75	345	240	275	305	275	350
8		(2) 2x	SDWH19800DB	2	315	225	255	260	275	230
8		(2) 2x	SDWS22800DB	2	345	240	275	360	275	345
5	Top Plate	(2) 2x	SDWS22500DB	2	345	240	275	360	275	345
6		(2) 2x	SDWH19600DB	2	315	225	255	260	275	230
6		(2) 2x	SDWS22600DB	2	345	240	275	360	275	345

1. Allowable loads are shown at the wood load duration factor of C_D = 1.00. Loads may be increased for load duration by the building code up to a C_D = 1.60.
2. For 2x solid sawn members and 1¼" LVL or LSL members the minimum edge distance is ⅝". For 1¾" LVL or LSL members the minimum edge distance is ⅞".
3. Wood structural panel up to 1⅛" thick (23/32 for 4" fasteners) is permitted between sole plate and rim board provided it is fastened to the rim board per code and the minimum penetration of the screw into the rim/block is met.
4. Double sole plate and top plate fastened minimum per code.
5. Minimum rim height is 9¼" when using fasteners on the top and bottom. Sole to blocking loads can be achieved with or without a wall below.
6. For assemblies using SPF/HF lumber for the sole plate, top plate, or rim/blocking members, multiply table values by 0.86.

Spacing for Multiple Rows of Fasteners

Material	O.C. Spacing/ End Distance Spacing (in.)	Row Offset (in.)	Row Stagger (in.)
Solid Sawn	3	1¼	1¼
	6		
LVL or LSL	4	1¾	1¾
	6	1¼	1¼

1. The material must be wide enough to accommodate minimum edge distance, row offset and row stagger.

C-F-2019TECHSUP ©2019 SIMPSON STRONG-TIE COMPANY INC.

Strong-Drive® SDS HEAVY-DUTY CONNECTOR Screw

For more information, see p. 60, C-F-2019 Fastening Systems Catalog

SDS — Allowable Shear Values for Sole-to-Rim Connections

Size (in.)	Model No.	Sole Plate Nominal Thickness (in.)	Minimum Penetration into Rim Board (in.)	Reference Allowable Loads (lb.)							
				2x DFL/SP Rim Board		2x SPF/HF Rim Board		1¼" Min. LVL Rim Board		1¼" Min. LSL Rim Board	
				DFL/SP Sole Plate	SPF/HF Sole Plate	DFL/SP Sole Plate	SPF/HF Sole Plate	DFL/SP Sole Plate	SPF/HF Sole Plate	DFL/SP Sole Plate	SPF/HF Sole Plate
¼ x 4.5	SDS25412	2x	2	250	190	190	190	190	190	220	190
¼ x 5	SDS25500	2x	2	250	190	190	190	190	190	220	190
¼ x 6	SDS25600	2x, 3x, (2)-2x	2	250	190	190	190	190	190	220	190

1. Allowable loads are based on testing per ICC-ES AC233 and are limited to parallel-to-grain loading.
2. Allowable loads are shown at the wood load duration factor of C_D = 1.00. Loads may be increased for load duration by the building code up to a C_D = 1.60.
3. Minimum spacing of the SDS for sawn lumber applications is 3" o.c., minimum end distance is 3", and minimum edge distance is ⅝".
4. Minimum spacing of the SDS for LVL and LSL applications is 6" o.c., minimum end distance is 6", and minimum edge distance is ⅝".
5. Wood structural panel up to 1⅛" thick is permitted between the sole plate and rim board provided it is fastened to the rim board per code and the minimum penetration of the screw into the rim board is met.
6. A double 2x sole/top plate is permitted provided it is independently fastened per the code and the minimum screw penetration per the table is met.
7. Minimum rim board height shall be 9¼" when using SDS screws for sole and top plate fastening.
8. Sole-to-rim loads can be achieved without a wall below.

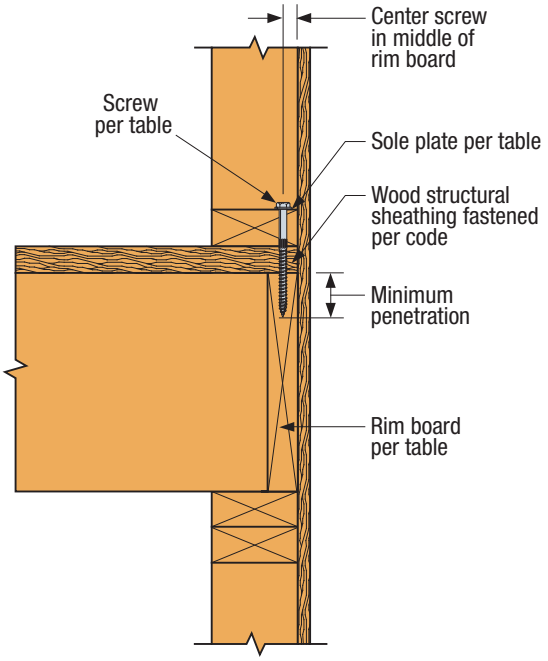

Sole-to-Rim Board Assembly
(Other fasteners not shown for clarity)

C-F-2019TECHSUP ©2019 SIMPSON STRONG-TIE COMPANY INC.

Strong-Drive®
SDWF **FLOOR-TO-FLOOR** Screw

Wind-Uplift Restraint Connections with Shrinkage Compensation

Features:

- The take-up washer (TUW) allows for shrinkage compensation ensuring a tight connection even after initial shrinkage and settlement occur
- One screw length can be used for multiple floor depths (refer to chart to select appropriate screw size), reducing the need for many screw lengths

Codes/Standards: ICC-ES ESR-3046 (SDWF), ICC-ES ESR-2320 (TUW), State of Florida FL9589, FL1007 (TUW)

US Patents 8,656,650, 8,844,244 and 8,276,323

For more information, see p. 86, C-F-2019 Fastening Systems Catalog

Additional Installation Considerations:

- To choose the appropriate SDWF screw length, see top table on next page
- The SDWF screw installs best with a high torque, ½" variable speed drill (at least 18V if cordless) with a 5⁄16" hex-head driver (hex driver provided)
- See details for minimum edge/end fastener distances

Installation Instructions for the Strong-Drive SDWF STRUCTURAL Screw and Take-Up Washer (TUW)

To Install:

1. a) Drive the SDWF screw vertically (90°±2°) into the center of the upper-wall bottom plate.
   b) Once the SDWF screw has passed through upper-wall bottom plate and floor sheathing, make sure the screw is still vertical (90°±2°) prior to driving it into lower-wall double top plate. Adjust if necessary.
   c) Continue driving the SDWF screw until the head is a minimum of 2" above the upper-wall bottom plate.

2. Slide the TUW (provided) over the SDWF screw head and center using locator tab as a reference. Orient locator tab so that it points toward the outside of the wall.

1.a

1.b

1.c

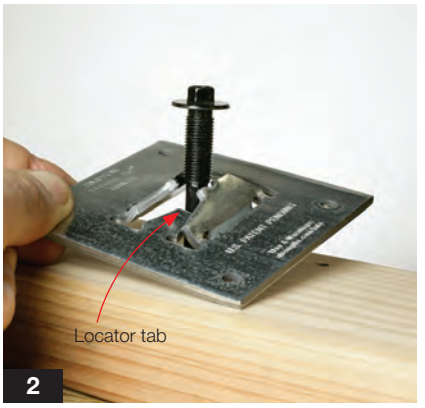

2

3. Secure the TUW to the upper-wall bottom plate with (4) #9 x 2½" Simpson Strong-Tie® Strong-Drive SD screws (provided).

4. Continue driving the SDWF screw until the washer head contacts the threaded TUW tabs and bends them until they engage the shank of the SDWF screw directly under the head. Do not overdrive.

5. Check to ensure the proper engagement of the TUW tabs to the SDWF screw shank using the screw depth guide (provided). The measured gap shall be no greater than 9⁄32" and no less than 5⁄32".

3

4

5

C-F-2019TECHSUP ©2019 SIMPSON STRONG-TIE COMPANY INC.

Strong-Drive® SDWF FLOOR-TO-FLOOR Screw Installation Conditions

Product Information and Withdrawal Loads

Size (in.)	Model No	Thread Length (in.)	Joist Depth Below (in.)				Reference Allowable Withdrawal per Thread Penetration (lb./in.)		
			Single Bottom Plate		Double Bottom Plate				
			Min.	Max.	Min.	Max.	SP	DFL	SPF
0.27 x 16	SDWF2716-TUW	5	8½	10½	6⅞	9	295	250	180
0.27 x 20	SDWF2720-TUW	5	12½	14½	10⅞	13			
0.27 x 24	SDWF2724-TUW	5	16½	18½	14⅞	17			
0.27 x 26	SDWF2726-TUW	5	18½	20½	16⅞	19			
0.27 x 30	SDWF2730-TUW	5	22½	24½	20⅞	23			

1. Allowable loads are for C_D=1.0 and may be increased for load duration up to C_D = 1.6.
2. Joist depth listed based on the ¾" subfloor and 3" of thread penetration into double top plates.

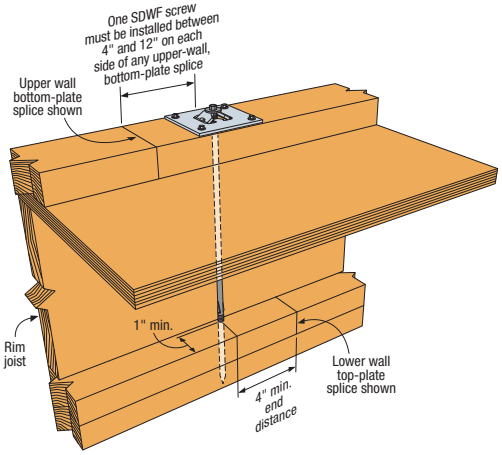

Typical SDWF and TUW Installation

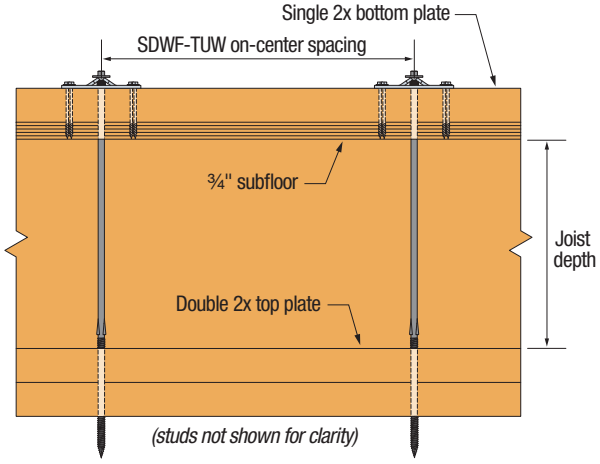

SDWF-TUW Assembly

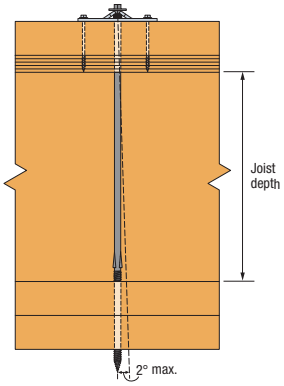

Typical SDWF Angle Limit Installation

SDWF-TUW Floor-to-Floor Screw — On-Center Spacing for Uniform Uplift Loads

Maximum SDWF Screw Spacing (in.) Along Wall Bottom Plate for Wind Uplift											
Bottom Plate	Interstory Unit Wind Uplift, Lb. per Lineal Foot (plf)										
Single 2x4	100 plf	150 plf	200 plf	250 plf	300 plf	350 plf	400 plf	450 plf	500 plf	550 plf	600 plf
SP	46	40	36	34	30	28	26	24	24	22	22
DFL	48	42	38	34	32	30	30	26	24	22	20
SPF	46	40	36	34	32	30	26	22	20	18	16
Single 2x6	100 plf	150 plf	200 plf	250 plf	300 plf	350 plf	400 plf	450 plf	500 plf	550 plf	600 plf
SP	56	48	44	40	38	36	34	34	32	30	28
DFL	56	48	44	40	38	34	30	26	24	22	20
SPF	52	46	42	38	34	30	26	22	20	18	16

1. Spacing listed based on lesser of: single bottom plate bending allowable load, single bottom plate deflection limited to spacing/240 and ¼" max. for No. 2 grade lumber, screw allowable withdrawal load, and take-up washer allowable load.
2. Withdrawal load is based on a C_D = 1.6 and minimum 3" penetration into lower wall double top plates.
3. Stud-to-plate connections are required to complete the load path. These connections shall not exceed the lesser of 48" o.c. or SDWF spacing.
4. Spacing values listed for SP lumber consider base values adopted by AWC on June 1, 2012.

C-F-2019TECHSUP ©2019 SIMPSON STRONG-TIE COMPANY INC.

Strong-Drive®
SDWF **FLOOR-TO-FLOOR** Screw Installation Conditions (cont.)

Concentrated Uplift Loads

Model No.	Single SDWF-TUW				Double SDWF-TUW			
	Allowable Tension Load (lb.)			Deflection at Highest Allowable Load (in.)	Allowable Tension Load (lb.)			Deflection at Highest Allowable Load (in.)
	SP	DFL	SPF		SP	DFL	SPF	
SDWF2716-TUW	1,410	1,200	865	0.095	2,270	2,125	1,730	0.142
SDWF2720-TUW								
SDWF2724-TUW								
SDWF2726-TUW								
SDWF2730-TUW								

1. Allowable loads listed include a wood load duration factor of C_D = 1.6 for wind or earthquake loading with no further increase allowed; reduce when other loads govern.
2. Single and double SDWF-TUW applications listed are for concentrated load uplift restraint conditions (i.e., end of header, at girders, or at the end of shearwalls).

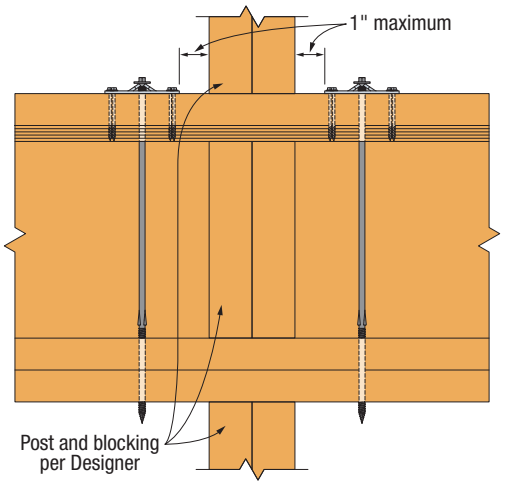

Double SDWF-TUW Concentrated Load Restraint Detail at Continuous Wall
(single SDWF-TUW similar)

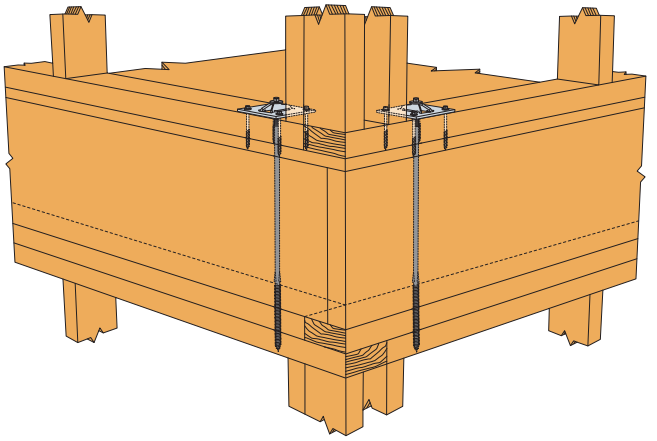

Perspective View of Corner Conditions with Double SDWF-TUW
(single SDWF-TUW similar)

Note: Stud-to-plate connections are required to complete the load path and are the responsibility of the designer. SDWF not to replace holdowns in shearwall applications.

Web App Enables Designers to Calculate Wood Shrinkage Easier

The Simpson Strong-Tie® Wood Shrinkage Calculator is a quick and easy web app to estimate the amount of shrinkage the structure may experience as the wood member loses moisture content after it is framed and in service. The calculator estimates the shrinkage of each wood member in the wall and floor framing assembly and provides a graphical summary to help understand the global impact of shrinkage of individual elements in the wall system. To access this free application, visit **strongtie.com/shrinkcalc**.

C-F-2019TECHSUP ©2019 SIMPSON STRONG-TIE COMPANY INC.

Strong-Drive® SDWF **FLOOR-TO-FLOOR** Screw Installation Conditions (cont.)

Alternate Floor Joist Depths

The SDWF Floor-to-Floor screw is available in lengths of 16", 20", 24", 26" and 30". These lengths allow for full 3" thread penetration into the double top plates to accommodate a wide range of floor depths. Table 1 below provides allowable withdrawal loads and SDWF spacing for common floor depths which results in reduced thread penetration. Table 2 provides additional on-center spacing for the 30" SDWF with 22" and 24" floor joist depths to resist uniform uplift loads. For additional floor depths, refer to engineering letter L-F-SDWFALTHT, available on **strongtie.com.**

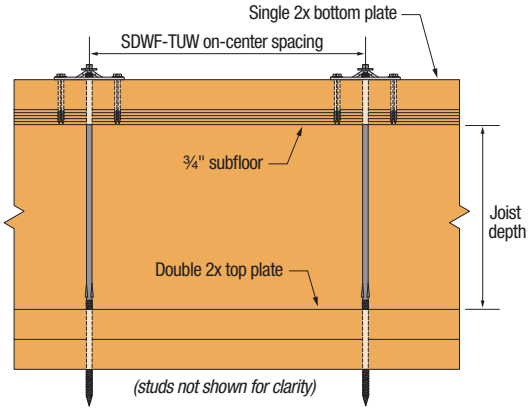

SDWF-TUW Assembly

Table 1: SDWF On-Center Spacing for Uniform Uplift Loads with SINGLE Bottom Plates

Joist Depth (in.)	Model No.	Wall Plate Species	Withdrawal per SDWF	Maximum SDWF Screw Spacing (in.) Along Wall Bottom Plate for Wind Uplift										
				Interstory Unit Wind Uplift (lb. per Lineal Foot)										
			(lb.) (160)	100	150	200	250	300	350	400	450	500	550	600
22	SDWF2730-TUW	Single 2x4 Bottom Plate												
		SP	1,195	46	40	36	34	32	30	28	26	24	24	22
		DFL	1,015	48	42	38	36	34	32	30	26	24	22	20
		SPF	730	46	40	36	34	28	24	22	18	18	16	14
		Single 2x6 Bottom Plate												
		SP	1,195	54	46	42	40	36	36	34	32	28	26	24
		DFL	1,015	56	48	44	42	38	34	30	26	24	22	20
		SPF	730	54	46	42	34	28	24	22	18	18	16	14
24	SDWF2730-TUW	Single 2x4 Bottom Plate												
		SP	1,410	46	40	36	34	32	30	28	26	24	24	22
		DFL	1,200	48	42	38	36	34	32	30	28	26	26	24
		SPF	865	46	40	36	34	32	30	26	22	20	18	16
		Single 2x6 Bottom Plate												
		SP	1,410	54	46	42	40	36	36	34	32	30	28	28
		DFL	1,200	56	48	44	42	38	36	36	32	28	26	24
		SPF	865	54	46	42	40	34	30	26	22	20	18	16

See notes below

Table 2: SDWF On-Center Spacing for Uniform Uplift Loads with DOUBLE Bottom Plates

Joist Depth (in.)	Model No.	Wall Plate Species	Withdrawal per SDWF	Maximum SDWF Screw Spacing (in.) Along Wall Bottom Plate for Wind Uplift										
				Interstory Unit Wind Uplift (lb. per Lineal Foot)										
			(lb.) (160)	100	150	200	250	300	350	400	450	500	550	600
22	SDWF2730-TUW	Double 2x4 Bottom Plate												
		SP	1,410	58	50	46	42	40	38	36	34	34	30	28
		DFL	1,200	60	52	48	44	42	40	36	32	28	26	24
		SPF	865	58	50	46	40	34	30	26	22	20	18	16
		Double 2x6 Bottom Plate												
		SP	1,410	66	58	54	50	46	44	42	38	34	30	28
		DFL	1,200	68	62	56	52	48	40	36	32	28	26	24
		SPF	865	66	58	52	40	34	30	26	22	20	18	16
24[4]	SDWF2730-TUW	Double 2x4 Bottom Plate												
		SP	850	58	50	46	40	34	28	24	22	20	18	16
		DFL	720	60	52	42	34	28	24	22	18	16	16	14
		SPF	515	58	40	30	24	20	18	16	14	12	10	10
		Double 2x6 Bottom Plate												
		SP	850	66	58	50	40	34	28	24	22	20	18	16
		DFL	720	68	56	42	34	28	24	22	18	16	16	14
		SPF	515	62	40	30	24	20	18	16	14	12	10	10

1. Spacing listed based on lesser of single bottom plate ending allowable load, single bottom plate deflection limited to spacing/240 and ¼" max for No. 2 grade lumber, screw allowable withdrawal load, and take-up washer allowable load.
2. Withdrawal load is based on a C_D = 1.6.
3. Stud-to-plate connections are required to complete the load path. These connections shall not exceed the lesser of 48" o.c. or SDWF spacing.
4. Applications with 24" joist depths with double bottom plates primarily connect to the upper 2x of the double top plate; connections securing the double top plate to the framing below must engage the upper 2x plate in order to provide a complete load path.

C-F-2019TECHSUP ©2019 SIMPSON STRONG-TIE COMPANY INC.

Strong-Drive®
SDWS **LOG** and SDWH **TIMBER-HEX HDG** Screw

Floor-to-Floor

The SDWS Log screw (SDWS221500) and SDWH Timber-Hex HDG screw (SDWH271500G) have been evaluated as alternatives for uplift connection between floors that do not require shrinkage compensation. The application is specific to framing that consists of a single wall bottom plate, joist depth of 9.25 to 9.5 inches, and double 2x wall top plate. These screws are recognized in IAPMO-UES ER-192. Typical installation and corresponding load tables for floor systems is shown in the following pages.

For more information, see p. 83 (SDWS Log) and p. 57 (SDWH Timber-Hex HDG), C-F-2019 Fastening Systems Catalog

SDWS Log Screw (SDWS221500)

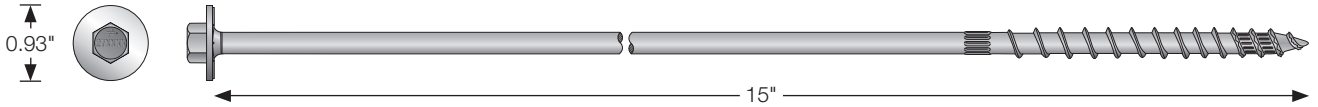

SDWH Timber-Hex HDG Screw (SDWH271500G)

Product Information and Withdrawal/Pull-Through Loads

Size (in.)	Model No.	Thread Length (in.)	Reference Allowable Withdrawal per Inch of Thread Penetration (lb./in.)[1]			Reference Allowable Fastener Head Pull-Through for 2x Plate (lb.)[1]		
			SP	DFL	SPF	SP	DFL	SPF
0.22 x 15	SDWS221500	2¾	260	215	185	800	695	495
0.27 x 15	SDWH271500G	3	285	255	210	880	875	695

1. Allowable loads are shown at the wood load duration factor of C_D = 1.0. Loads may be increased for load duration up to a C_D = 1.6.

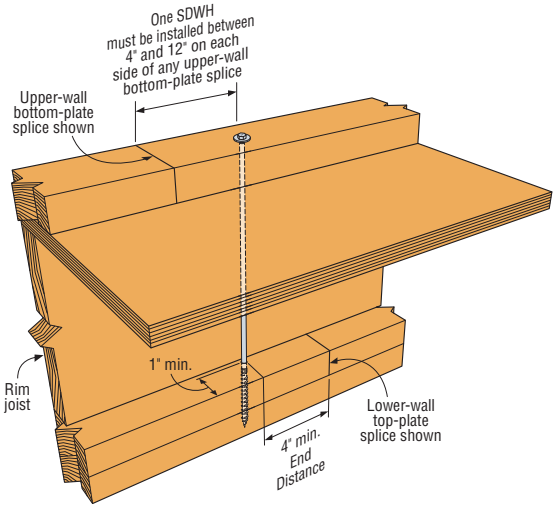

(Plate-to-rim fastening not shown for clarity)

Typical SDWH271500G Installation
(SDWS221500 Similar)

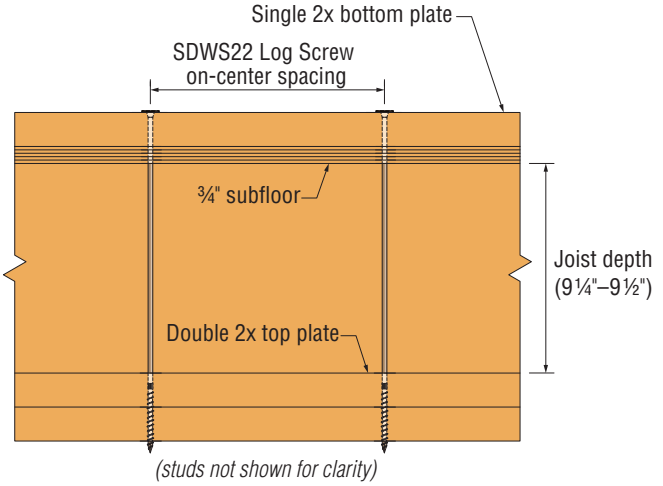

(studs not shown for clarity)

Typical SDWS221500 Spacing
(SDWH271500G Similar)

C-F-2019TECHSUP ©2019 SIMPSON STRONG-TIE COMPANY INC.

Floor-to-Floor Fastening

On-Center Spacing for Uniform Uplift Loads

Joist Depth (in.)	Model No.	Wall Plate Species	Withdrawal per Screw (lb.)[2]	Maximum Screw Spacing (in.) Along Wall Bottom Plate for Wind Uplift — Interstory Unit Wind Uplift (Pounds per Lineal Foot)[2]										
				100 plf	150 plf	200 plf	250 plf	300 plf	350 plf	400 plf	450 plf	500 plf	550 plf	600 plf
9¼ to 9½	SDWS221500	Single 2x4 Bottom Plate												
		SP	930	46	40	36	34	32	30	28	24	22	20	18
		DFL	770	48	42	38	36	30	26	22	20	18	16	14
		SPF	675	46	40	36	32	26	22	20	18	16	14	12
		Single 2x6 Bottom Plate												
		SP	930	54	46	42	40	36	32	28	24	22	20	18
		DFL	770	56	48	44	36	30	26	22	20	18	16	14
		SPF	675	54	46	40	32	26	22	20	18	16	14	12
9¼ to 9½	SDWH271500G	Single 2x4 Bottom Plate												
		SP	1,150	46	40	36	34	32	30	28	26	24	24	22
		DFL	1,020	48	42	38	36	34	32	30	26	24	22	20
		SPF	850	46	40	36	34	32	28	24	22	20	18	16
		Single 2x6 Bottom Plate												
		SP	1,150	54	46	42	40	36	36	34	30	28	24	22
		DFL	1,020	56	48	44	42	38	34	30	26	24	22	20
		SPF	850	54	46	42	40	34	28	24	22	20	18	16

1. Spacing listed based on lesser of: single bottom plate bending allowable load, single bottom plate deflection limited to spacing/240 and ¼" max. for No. 2 grade lumber, screw allowable withdrawal and pull-through loads.
2. Withdrawal and uplift loads are based on C_D = 1.6.
3. Stud-to-plate connections and plate-to-rim connections are required to complete the load path.
4. Tabulated loads are applicable to the following minimum thread embedment length into double top plate: SDWS221500 = 2¼", SDWH271500G = 2½".

Concentrated Uplift Loads

Size (in.)	Model No.	Thread Length (in.)	Single Fastener — Allowable Tension Load (lb.)			Double Fastener — Allowable Tension Load (lb.)		
			SP	DFL	SPF	SP	DFL	SPF
0.22 x 15	SDWS221500	2¾	930	770	675	1,860	1,540	1,350
0.27 x 15	SDWH271500G	3	1,150	1,020	850	2,240	2,040	1,700

1. Allowable loads include a wood load duration factor of C_D = 1.6 for wind and earthquake loading with no further increase allowed; reduce when other loads govern.
2. Single and double fastener applications are for concentrated-load uplift restraint conditions (i.e. end of header, at girders, or at the end of shear walls).
3. Tabulated loads are applicable to the following minimum thread embedment into the double top plate: SDWS221500 = 2¼", SDWH271500G = 2½".

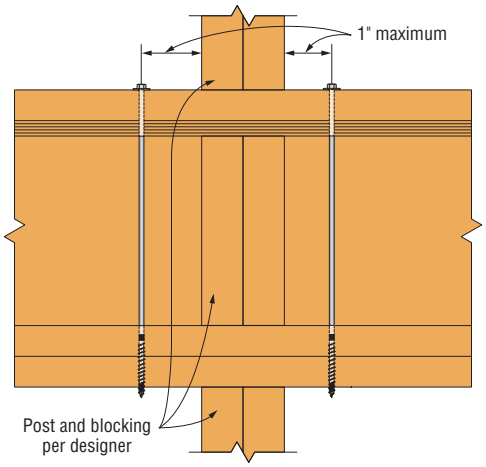

Typical Double SDWH27G or SDWS22 (Similar) Concentrated Load Restraint Detail at Compression Blocking

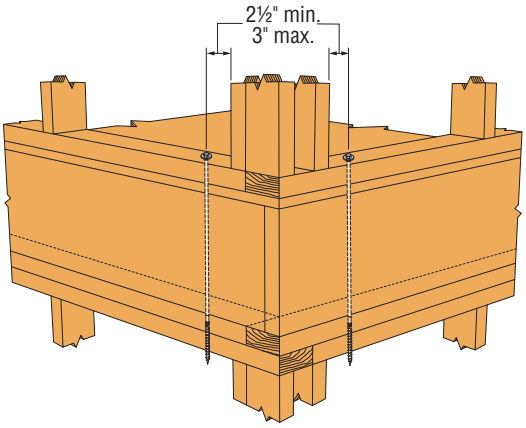

Typical Double SDWH27G or SDWS22 (Similar) Concentrated Load Restraint Detail at Wall Corner

Note: Stud-to-plate connections and rim-to-plate connections are required to complete the load path and are in the responsibility of the designer. SDWS22 and SDWH27G do not replace holdowns in shearwall applications.

C-F-2019TECHSUP ©2019 SIMPSON STRONG-TIE COMPANY INC.

Strong-Drive® WSV SUBFLOOR Screw

For more information, see p. 200, C-F-2019 Fastening Systems Catalog

1 ¾"–3" WSV Fasteners Meet Code Requirements

As listed in ICC-ES ESR-1472, WSV screws meet code requirements for the 2015 and 2018 International Building Code (IBC) and International Residential Code (IRC). Evaluation report recognized uses of WSV screws include the following applications:

- Substitute for 8d and 10d common nails in horizontal diaphragms per AWC SDPWS 2015, Tables 4.2A, 4.2C, and 4.2D; IBC 2018 and 2015, Table 2304.10.1, and IRC 2018 and 2015, Table R602.3(1).
- Code prescribed connections per IBC 2018 and 2015, Table 2304.10.1 and IRC 2015 and 2018, Table R602.3(1).
- Single and diagonally-sheathed lumber diaphragms per AWC SDPWS 2015, Table 4.2D.
- Prescriptive sheathing applications in IRC 2018 and 2015, Table R602.3(1) and in structures regulated by the IRC where the engineered design is submitted in accordance with IRC R301.1.3.

Guidelines for Fastening Diaphragms Without Glue

The design of wood floor systems constructed with wood structural panel (WSP) sheathing fastened to framing considers the diaphragm performance of the system as presented in the codes (as affected by framing, sheathing thickness, sheathing layout and fastening) and may also consider the composite action of the sheathing with the framing system (composite action is the combined stiffness of the joist with the sheathing). The framing systems can be grouped into two classes: (1) sawn lumber and parallel-chord wood trusses, and (2) wood I-joists. WSV screws may be used as alternate fasteners to common nails in each floor class subject to certain constraints.

For Diaphragms with a Framing System that Is Sawn Lumber or Parallel-Chord Wood Trusses

Simpson Strong-Tie WSV screws may be used as one-for-one substitutes for 10d common and smaller nails that are specified for horizontal diaphragm design in accordance with the AWC SDPWS 2015, and IBC and IRC 2015 and 2018.

For Diaphragms with Wood I-Joist Framing Systems

I-joist manufacturers use the extra stiffness resulting from composite action when developing allowable floor joist span tables. Therefore, I-joist floor span tables generally assume glued-nailed construction.

1. For floor systems designed or intended to be glued-nailed:
   - WSV screws may be substituted one-for-one for common nails, without glue, provided the maximum allowable I-joist span is reduced by 12" compared to the I-joist manufacturer's glued-nailed spans. The screws shall have at least 1 ¼" penetration into the I-joist flange (or full penetration for flanges less than 1 ¼" thick).
   - Where glue is used with the screws, no reduction in span is required.
   - Check with the I-joist manufacturer for any additional diaphragm requirements.
2. For floor systems designed or intended to be nailed-only:
   - WSV screws may be substituted one-for-one for common nails, with no reduction in span, provided at least 1 ¼" penetration into the I-joist flange is achieved (or full penetration for flanges less than 1 ¼" thick).
   - Check with the I-joist manufacturer for any additional diaphragm requirements.

C-F-2019TECHSUP ©2019 SIMPSON STRONG-TIE COMPANY INC.

Strong-Drive® WSV SUBFLOOR Screw (cont.)

Codes/Standards: ICC-ES ESR-1472

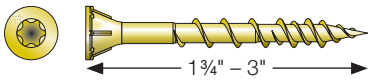

WSV — Allowable Shear Loads for DFL/SP and SPF/HF

Size (in.)	Model No.	Diameter (in.)	Thread Length (in.)	Reference Shear (lb.) for 1½" Side Member Thickness	
				DFL/SP	SPF/HF
#9 x 2½	WSV212S	0.13	2.0	93	73
#9 x 3	WSV3S	0.13	2.2	102	87

1. Table values are based on attachment of a 1½" side member to a 1½" main member of the same species and grade.
2. Table values are based on the 2018 NDS, C_D = 1.0. Values shall be multiplied by all applicable factors, such as duration of load, etc., except where noted.
3. Specific Gravities (G) assumed: DFL G = 0.50, SP G = 0.55, SPF G = 0.42.
4. The spacing of applied uniform loads to a multi-ply member shall not exceed 24 inches on center.

WSV — Allowable Pull-Through and Withdrawal

Size (in.)	Model No.	Thread Length (in.)	Reference Allowable Pull-Through (lb.)						Reference Allowable Withdrawal Load			
			Minimum Nominal Panel Thickness (in.)				Minimum Thickness (in.)		DFL/SP (lb./in.) W	DFL/SP (lbs.) W_{max}	SPF/HF (lb./in.) W	SPF/HF (lbs.) W_{max}
			OSB/Plywood Rated Sheathing, Exposure 1				DFL/SP	SPF/HH				
			7/16	15/32	19/32	23/32	1½	1½				
#9 x 1¾	WSV134S	1.20	66	66	96	109	195	141	123	147	98	117
#9 x 2	WSV2S	1.45							128	185	99	144
#9 x 2½	WSV212S	2.00							128	256	117	233
#9 x 3	WSV3S	2.20							141	311	121	266

1. Use the lower of the pull-through or withdrawal values to determine axial design value.
2. Screws must be installed normal to the side grain of the wood main member with the screw axis at a 90° angle to the wood fibers.
3. The main framing member must be wood having a minimum specific gravity of 0.50 for DFL and SP main members, and 0.42 for SPF and HF main members. DFL is Douglas Fir–Larch. SP is Southern Pine. SPF is Spruce-Pine-Fir. HF is Hem-Fir.
4. Withdrawal values, W, are in pounds per inch of the thread penetration in to the main member. Wmax is the maximum reference withdrawal value.
5. Allowable loads are shown at the wood load duration factor of C_D = 1.0. Loads may be increased for load duration up to C_D = 1.6.

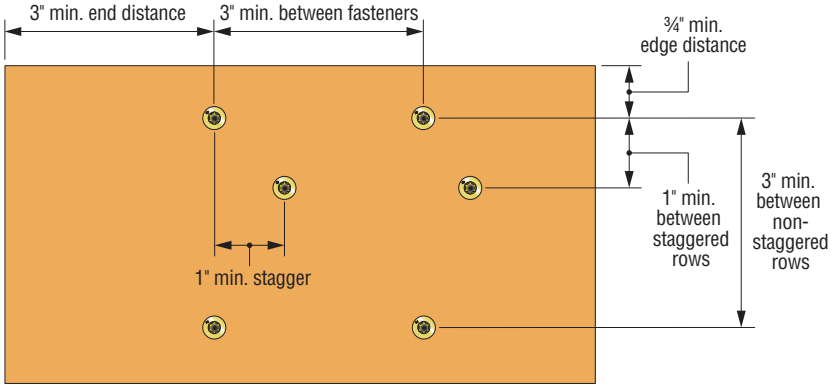

Strong-Drive WSV Subfloor Screw Spacing Detail

C-F-2019TECHSUP ©2019 SIMPSON STRONG-TIE COMPANY INC.

Strong-Drive® WSNTL SUBFLOOR Screw

For Subfloor and Sheathing to Wood

Codes/Standards: ICC-ES ESR-1472; City of L.A. RR25661 (Note: 1¾" length not code listed)

For More Product Information, see p. 202, C-F-2019 Fastening Systems Catalog

WSNTL — Allowable Shear — Wood Structural Panel Diaphragms with Framing of Douglas Fir–Larch or Southern Pine for Wind or Seismic Loading (2", 2½" and 3" Lengths) (lb./ft.)

Panel Grade	Minimum Nominal Panel Thickness (in.)	Minimum Nominal Width of Framing Members at Adjoining Panel Edges and Boundaries (in.)[4,5]	Blocked Diaphragms: Screw spacing (inches) at diaphragm boundaries (all cases), at continuous panel edges parallel to load (Cases 3 and 4), and at all edges (Cases 5 and 6)[6]				Unblocked Diaphragms: Screws Spaced 6", Maximum, at Support Edges[6]	
			6	4	2½[7]	2[7]	Case 1 (no unblocked edges or continuous joints parallel to load)	All other configurations (Cases 2,3,4,5 and 6)
			Screw Spacing (in.) at Other Panel Edges					
			6	6	4	3		
Structural 1	⅜	2	270	360	530	600	240	180
		3	300	400	600	675	265	200
	15/32	2	320	425	640	730	285	215
		3	360	480	720	820	320	240
Sheathing and single floor	⅜	2	240	320	480	545	215	160
		3	270	360	540	610	240	180
	7/16	2	255	340	505	575	230	170
		3	285	380	570	645	255	190
	15/32	2	290	385	575	655	255	190
		3	325	430	650	735	290	215
	19/32	2	320	421	640	730	285	215
		3	360	480	720	820	320	240

1. Minimum fastener penetration of 1¼" into the framing member is required.
2. For wind design, shear capacities may be increased 40% per section 2306.3.2 of the 2006 IBC, 2306.2.1 of the 2009 IBC, and 2306.2 of the 2012/2015/2018 IBC.
3. Allowable loads are shown at the wood load duration of C_D=1.6. No further increases shall be permitted. For shear loads of normal or permanent load duration as defined by the NDS-2015, the values in the table above must be multiplied by 0.63 or 0.56, respectively.
4. The minimum nominal width of framing members not located at boundaries or adjoining panel edges must be 2".
5. Framing at adjoining panel edges must be 3" nominal or wider, and screws must be staggered where both of the following conditions are met: (1) screws having penetration into framing of more than 1½" and (2) screws are spaced 3" o.c. or less.
6. Space screws maximum 12" o.c. along intermediate framing members (6" o.c. where supports are spaced 48" o.c.).
7. Framing at adjoining panel edges must be 3" nominal or wider, and screws must be staggered where screws are spaced 2" or 2½" on center.
8. See ICC-ES ESR-1472 for allowable shear loads for high-load diaphragms.
9. Strong-Drive WSNTL Subfloor Screw models: 2" = WSNTL2LS; 2½" = WSNTL212S; 3" = WSNTL3S.

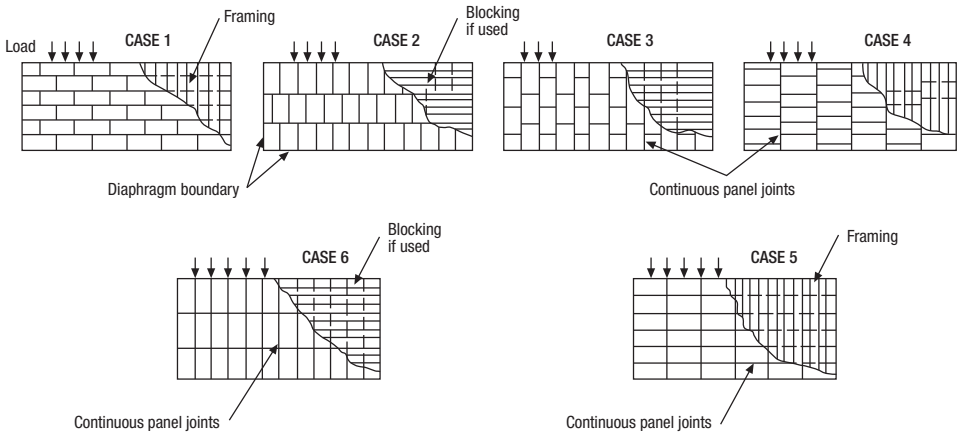

C-F-2019TECHSUP ©2019 SIMPSON STRONG-TIE COMPANY INC.

Strong-Drive® WSNTL SUBFLOOR Screw (cont.)

WSNTL — Allowable Withdrawal and Pull-Through Loads for Wind or Seismic Loading

Size (in.)	Model No.[6]	Thread Length (in.)	Reference Allowable Pull-Through[1] (lb.) Minimum Nominal Panel Thickness (in.) OSB/Plywood Rated Sheathing, Exposure 1				Reference Allowable Withdrawal Load per Thread Penetration (lb./in.) Framing Member[3]		
			7/16	15/32	19/32	23/32	2x SPF/HF	2x DFL	2x SP
#8 x 2	WSNTL2LS	1.47	70	71	116	116	93	133	175
#8 x 2½	WSNTL212S	1.97							
#8 x 3	WSNTL3S	2.17							

1. Use the lower of the pull-through or withdrawal values to determine axial design value.
2. Screws must be installed straight into the side grain of the wood main member with the screw axis at a 90° angle to the wood fibers.
3. The main framing member must be wood having a minimum specific gravity of 0.50 for DFL and SP main members, and 0.42 for SPF and HF main members. DFL is Douglas Fir–Larch. SP is southern pine. SPF is spruce-pine-fir. HF is hem-fir.
4. Table based on testing conducted in accordance with AC233. Design values presented are based on average ultimate values and divided by 5.
5. Allowable loads are shown at the wood load duration factor of C_D = 1.0. Loads may be increased for load duration up to C_D = 1.6.
6. The model number may end in the designation S or R, indicating that the screws are packaged as collated or for hand drive, respectively.

IBC Equivalent Prescriptive Fastening Schedule

Connection	Fastening	Location
2015/2018 IBC Table 2304.10.1		
19. 1" brace to each stud and plate	2 screws	Face
21. 1" x 8" and wider sheathing to each bearing	3 screws	Face
24. 1" x 6" subfloor or less to each joist	2 screws	Face
2012, 2009 and 2006 IBC Table 2304.9.1		
3. 1" x 6" subfloor or less to each joist	2 screws	Face
4. Wider than 1" x 6" subfloor to each joist	3 screws	Face
20. 1" diagonal brace to each stud and plate	2 screws	Face
21. 1" x 8" sheathing to each bearing	3 screws	Face
22. Wider than 1" x 8" sheathing to each bearing	3 screws	Face

1. Fastener penetration into the supporting member must be a minimum of 13/16".

C-F-2019TECHSUP ©2019 SIMPSON STRONG-TIE COMPANY INC.

Visit our Screw Substitution Calculator at **strongtie.com/webapps/screwsubstitutioncalculator/.**

Strong-Drive®
SDW TRUSS-PLY and EWP-PLY Screws

Truss-Ply Fastening, Multi-Ply Wood Members, Engineered-Lumber Products and Solid-Sawn Lumber

Codes/Standards: IAPMO-UES ER-192, City of L.A. RR25906, State of Florida FL13975

US Patent 9,523,383

For more information, see pp. 82–83, C-F-2019 Fastening Systems Catalog

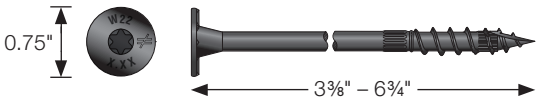

SDW EWP-PLY Screw

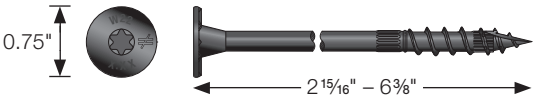

SDW TRUSS-PLY Screw

Installation:

- SDW screws install best with a low-speed ½" drill motor and a T-40 6-lobe bit. The matched bit included with the screws is recommended for best results.
- Predrilling is typically not required. SDW screws may be installed through metal truss plates as approved by the truss designer, provided the requirements of ANSI/TPI 1-2014 Section 8.9.2 are met (predrilling required through the plate using a maximum of 5/32" bit).
- Screw heads that are countersunk flush to the wood surface are acceptable if the screw has not spun out.
- Individual screw locations may be adjusted up to 3" to avoid conflicts with other hardware or to avoid lumber defects.

Notes to the Designer:

1. Allowable loads are based on testing per ICC-ES AC233. Maximum allowable withdrawal load for DFL/SP/SCL is 200 lb. and for SPF/HF withdrawal is 150 lb. where the entire thread length is engaged into the main member.
2. Allowable loads in tables are shown at the load duration factor of C_D = 1.00 and shall be multiplied by all applicable adjustment factors per the NDS. Loads may be increased for load duration per the building code up to a C_D = 1.6.
3. Minimum fastener spacing requirements: 6" end distance, 1 7/16" edge distance, ⅝" between staggered rows of fasteners, 4" between non-staggered rows of fasteners and 6" between fasteners in a row. Note the application drawing in the middle of p. 92.
4. Maximum fastener spacing is recommended not to exceed 24" on-center except as approved by a qualified Designer.
5. Structural composite lumber (SCL = LVL, PSL or LSL) having a minimum 0.8E designation for lateral and withdrawal loading shall have an equivalent specific gravity of 0.50 minimum for lateral and 0.42 for withdrawal loading.
6. Tabular loads in this document are based on the capacity of the Simpson Strong-Tie® SDW fasteners. The capacity of the multi-ply assembly must be checked by a qualified Designer.
7. For a top-loaded, solid sawn 2x, multi-ply assembly that is evenly loaded across the entire assembly width, the recommended fastener detail is two rows of SDW screws where the spacing between fasteners in a row is 32". For a top-loaded, SCL (1¾") multi-ply assembly that is evenly loaded across the entire assembly width, the recommended spacing between SDW screws in a row is 24" o.c.; use two rows for up to 18"-deep members and three rows for members deeper than 18".

SDW TRUSS-PLY — Allowable Shear Loads — DFL, SP, SPF, HF
Lumberand 2x Truss Loaded on Head Side

Assembly	Model No.	Nominal Screw Length (in.)	Thread Length (in.)	Nominal Side Member Thickness (in.)	Main Member Penetration[1] (in.)	Reference DFL/SP Allowable Shear (lb.)	Reference SPF/HF Allowable Shear (lb.)
Two-ply 2x/truss	SDW22300	2 15/16	1 7/16	1½	1⅜	325	255
Three-ply 2x/truss desert	SDW22438	4⅜	1 7/16	1½	2⅞	400	325
Three-ply 2x/truss	SDW22458	4⅝	1 7/16	1½	2⅞	400	325
Four-ply 2x/truss desert	SDW22600	6	1 7/16	1½	4½	400	340
Four-ply 2x/truss	SDW22638	6⅜	1 7/16	1½	4½	400	340

1. For minimum penetration into main (outermost) member of 1⅛", use 235 lb. for DFL/SP and 210 lb. for SPF/HF.

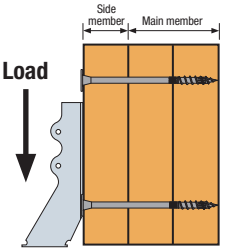

Loaded on Head Side
(three-ply assembly shown – other configurations similar)

SDW TRUSS-PLY — Allowable Shear Loads — DFL, SP, SPF, HF
Lumber and 2x Truss Loaded on Point Side

Assembly	Model No.	Nominal Screw Length (in.)	Thread Length (in.)	Nominal Side Member Thickness (in.)	Main Member Penetration[1] (in.)	Reference DFL/SP Allowable Shear (lb.)	Reference SPF/HF Allowable Shear (lb.)
Two-ply 2x/truss	SDW22300	2 15/16	1 7/16	1½	1⅜	325	255
Three-ply 2x/truss desert	SDW22438	4⅜	1 7/16	3	1⅜	275	255
Three-ply 2x/truss	SDW22458	4⅝	1 7/16	3	1⅜	275	255
Four-ply 2x/truss desert	SDW22600	6	1 7/16	4½	1⅜	275	255
Four-ply 2x/truss	SDW22638	6⅜	1 7/16	4½	1⅜	275	255

1. For minimum penetration into main member of 1⅛", use 235 lb. for DFL/SP and 210 lb. for SPF/HF.

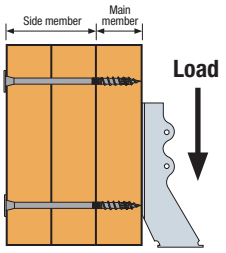

Loaded on Point Side
(three-ply assembly shown – other configurations similar)

C-F-2019TECHSUP ©2019 SIMPSON STRONG-TIE COMPANY INC.

Strong-Drive® SDW TRUSS-PLY and EWP-PLY Screws (cont.)

Lumber Fastening in Dry Climates

The highlighted regions on this map may experience drier conditions which can result in reduced lumber thickness (scant lumber) due to wood shrinkage. To help ensure optimum thread penetration into the main (outermost) member without excessive protrusion, Simpson Strong-Tie® offers the 4⅜" and 6" lengths of the SDW screw, which are sized for the thinner members common in these "desert" climates. It is the responsibility of the Truss Manufacturer or contractor/installer to determine the appropriate fastener length for any given application. See tables and footnotes for minimum required penetration.

SDW EWP-PLY — Reference Allowable Shear Loads — LVL, PSL and LSL Loaded on Head Side

Assembly	Model No.	Nominal Screw Length (in.)	Thread Length (in.)	Nominal Side Member Thickness (in.)	Main Member Penetration[1] (in.)	Equivalent Specific Gravity 0.50 Allowable Shear (lb.)	SPF/HF Allowable Shear (lb.)
Two-ply 1¾" SCL	SDW22338	3⅜	1 9/16	1¾	1⅝	400	255
Three-ply 1¾" SCL	SDW22500	5	1 9/16	1¾	3¼	400	325
Four-ply 1¾" SCL	SDW22634	6¾	1 9/16	1¾	5	400	385
Two-ply 3½" SCL	SDW22634	6¾	1 9/16	3½	3¼	400	—

1. For minimum penetration into main (outermost) member of 1½", use 300 lb.

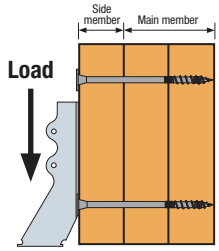

Loaded on Head Side
(three-ply assembly shown — other configurations similar)

SDW EWP-PLY — Reference Allowable Shear Loads — LVL, PSL and LSL Loaded on Point Side

Assembly	Model No.	Nominal Screw Length (in.)	Thread Length (in.)	Nominal Side Member Thickness (in.)	Main Member Penetration[1] (in.)	Equivalent Specific Gravity 0.50 Allowable Shear (lb.)	SPF/HF Allowable Shear (lb.)
Two-ply 1¾" SCL	SDW22338	3⅜	1 9/16	1¾	1⅝	400	255
Three-ply 1¾" SCL	SDW22500	5	1 9/16	3½	1½	300	255
Four-ply 1¾" SCL	SDW22634	6¾	1 9/16	5¼	1½	300	255
Two-ply 3½" SCL	SDW22634	6¾	1 9/16	3½	3¼	400	—

1. For minimum penetration into main member of 1½", use 300 lb.

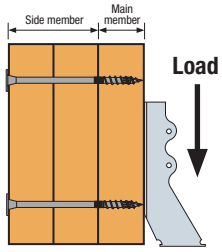

Loaded on Point Side
(three-ply assembly shown — other configurations similar)

SDW EWP-PLY — Allowable Shear Loads — Two-Ply 3x2/4x2 Parallel-Chord Trusses Loaded on Either Side

Assembly	Model No.	Nominal Screw Length (in.)	Reference DFL/SP Allowable Shear (lb.)	Reference SPF/HF Allowable Shear (lb.)
Two-ply 3x2 PCT	SDW22500	5	280	200
Two-ply 4x2 PCT	SDW22634	6¾	280	200

1. To transfer uniform or concentrated loads applied to simply supported spans on assembly top chord:
   a. Space screws as required to transfer half the load into the supporting truss.
   b. Minimum screw spacing shall be 4" o.c.
2. To transfer concentrated loads applied to simply supported spans on an assembly top chord or vertical web:
   a. Concentrated loads must be applied at a panel point.
   b. Screws to be installed within 12" of the concentrated load on top-chord assembly
3. Gap between the trusses shall not exceed ⅛".
4. Floor sheathing shall be screwed or nailed to each top-chord ply. (Fastener spacing per the applicable Code requirements, or 12" o.c.)
5. SDW screws shall not be installed in areas where lumber wane exceeds ¼".
6. Hangers on skewed girders:
   a. Hanger loads not exceeding 34" o.c. on a skewed girder (resulting from uniformly spaced joists up to 24" o.c.) may be converted to a uniform load.
   b. For girders with hanger load spacing in excess of 34" o.c. the loads shall be considered as concentrated loads at the applicable locations.
7. Other configurations acceptable when approved by Truss Designer.

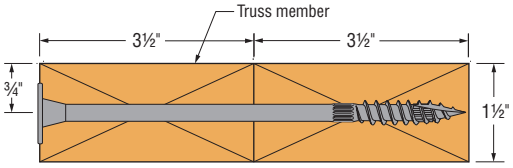

SDW Screw Position in Two-Ply 4x2 Truss
(two-ply 3x2 similar)

Concentrated Load

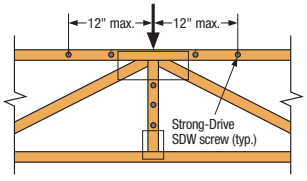

Uniform Load

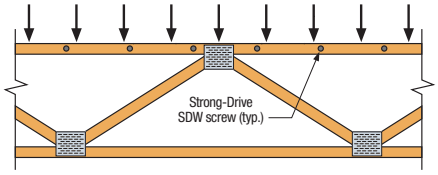

C-F-2019TECHSUP ©2019 SIMPSON STRONG-TIE COMPANY INC.

Strong-Drive® SDW TRUSS-PLY and EWP-PLY Screws (cont.)

SDW TRUSS-PLY — Allowable Uniform Load (plf) Applied to Either Outside Member — Side-Loaded Multi-Ply Assemblies

Multiple Members		Nominal Screw Length (in.)	Loaded Side	Reference DFL/SP						Reference SPF/HF					
				12" o.c.		16" o.c.		24" o.c.		12" o.c.		16" o.c.		24" o.c.	
Assembly	Components			2 Rows	3 Rows	2 Rows	3 Rows	2 Rows	3 Rows	2 Rows	3 Rows	2 Rows	3 Rows	2 Rows	3 Rows
A-W	Two-ply 2x/Truss	2 15/16	Either	1,300	1,950	975	1,465	650	975	1,020	1,530	765	1,150	510	765
B-W	Three-ply 2x/Truss	4 3/8 or 4 5/8	Head	1,200	1,800	900	1,350	600	900	975	1,465	730	1,095	490	730
			Point	825	1,240	620	930	415	620	765	1,150	575	860	385	575
C-W	Four-ply 2x/Truss	6 or 6 3/8	Head	1,065	1,600	800	1,200	535	800	905	1,360	680	1,020	455	680
			Point	735	1,100	550	825	365	550	680	1,020	510	765	340	510

1. Each ply is assumed to carry same proportion of load.
2. Loads may be applied to the head side and point side concurrently provided neither published allowable load is exceeded. (Example: a three-ply DFL assembly with a head side load of 1,300 plf and point side load of 900 plf may be fastened together with 3 rows of SDW at 16" o.c. between fasteners in a row.)
3. When hangers are installed on point side, hanger face fasteners shall be a minimum of 3" long.
4. Tables are based on Main Member Penetration as noted on pp. 90–91.
5. Hanger load spacing on the multi-ply assembly should not exceed 24" o.c. Exception: On a skewed girder, hanger loads up to 34" o.c. (resulting from joists uniformly spaced up to 24" o.c.) may be converted to a uniform load.

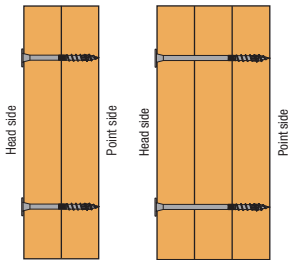

Assembly A-W Assembly B-W

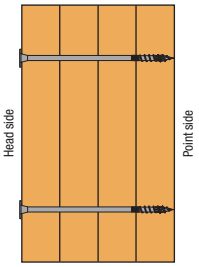

Assembly C-W

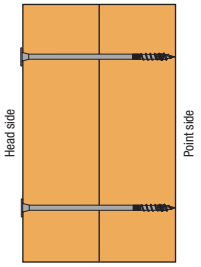

Assembly F-W

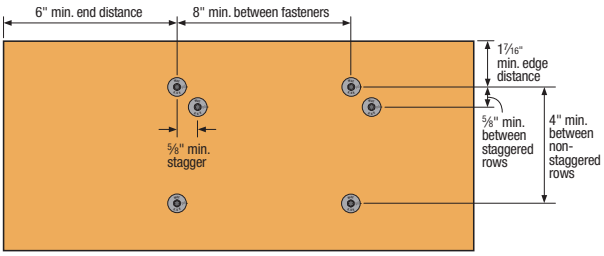

Spacing Requirements

SDW EWP-PLY — Reference Allowable Uniform Load (plf) Applied to Either Outside Member — Side-Loaded Multi-Ply LVL, PSL, and LSL Assemblies

Multiple Members		Nominal Screw Length (in.)	Loaded Side	12" o.c.		16" o.c.		24" o.c.	
Assembly	Components			2 Rows	3 Rows	2 Rows	3 Rows	2 Rows	3 Rows
A-W	Two-ply SCL	3 3/8	Either	1,600	2,400	1,200	1,800	800	1,200
B-W	Three-ply SCL	5	Head	1,200	1,800	900	1,350	600	900
			Point	900	1,350	675	1,015	450	675
C-W	Four-ply SCL	6 3/4	Head	1,065	1,600	800	1,200	535	800
			Point	800	1,200	600	900	400	600
F-W	Two-ply 3 1/2" SCL	6 3/4	Either	1,600	2,400	1,200	1,800	800	1,200

1. Each ply is assumed to carry same proportion of load. Loads may be applied to the head side and point side concurrently provided neither published allowable load is exceeded. (Example: a three-ply assembly with a head side load of 1,300 plf and point side load of 1,000 plf may be fastened together with three rows of SDW at 16" o.c. between fasteners in a row.)
2. When hangers are installed on point side, hanger face fasteners shall be a minimum of 3" long.
3. Tables are based on main member penetration as noted in single-fastener load tables.

C-F-2019TECHSUP ©2019 SIMPSON STRONG-TIE COMPANY INC.

Strong-Drive® SDW TRUSS-PLY and EWP-PLY Screws (cont.)

Allowable Loads for Side-Loaded Multi-Ply Beam Assemblies per Screw

For side-loaded assemblies of structural composite lumber or sawn lumber, allowable loads in a single fastener format can be calculated from the information on pp. 90–91 or fastener spacing relative to the side load.

As an example calculation, a three-ply beam or truss is to be fastened where the plies are of the same material and vertically-screw-laminated. The beam or truss is loaded on one face with a 2,400 lb. point load via a face-mount hanger. It is assumed that the face ply carries one-third of the load (800 lb.), and the remaining two-thirds of the load is transferred to the next two plies via the fasteners. The calculation for the allowable load applied to the outside ply of a multi-ply beam or truss is:

$$P_{allow} = Z\left(\frac{n}{n-1}\right)$$

P_{allow}	=	*allowable load that can be applied to the outside of the multi-ply truss or beam per fastener*
Z	=	*allowable shear per fastener in SCL or lumber*
n	=	*number of plies*

For the SDW EWP-PLY screw assembling SCL and the SDW TRUSS-PLY screw assembling sawn lumber or lumber trusses, the calculation provides the loads shown on p. 94.

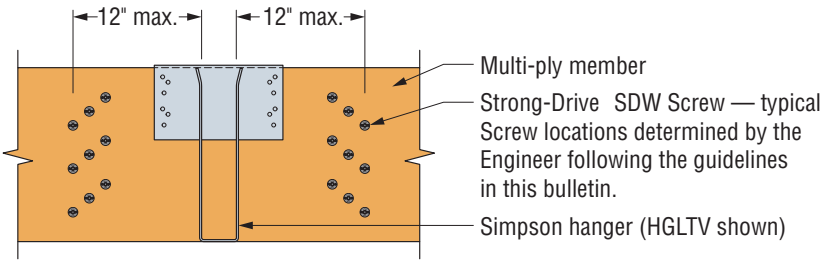

Maximum Fastener Spacing from Point Load

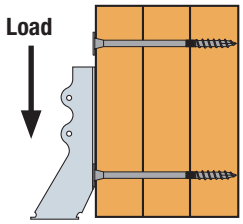

Loaded on Head Side
(three-ply assembly shown — other configurations similar)

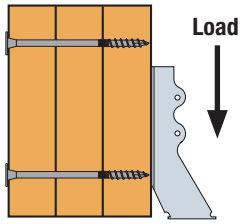

Loaded on Point Side
(three-ply assembly shown — other configurations similar)

Load Applied to Outside Multi-Ply Beam

C-F-2019TECHSUP ©2019 SIMPSON STRONG-TIE COMPANY INC.

Strong-Drive® SDW TRUSS-PLY and EWP-PLY Screws (cont.)

SDW EWP-PLY — Allowable Loads for Side-Loaded Multi-Ply SCL Assemblies

Assembly Illustration	SCL Components (Plies-thickness, in.)	Model No.	Nominal Screw Length (in.)	Reference Allowable Load for Side-Loaded Multi-Ply Truss or Beam per Screw (P_{allow}, lb.)	
				Head Side	Point Side
A-W	(2) 1¾	SDW22338	3⅜	800	800
B-W	(3) 1¾	SDW22500	5	600	450
C-W	(4) 1¾	SDW22634	6¾	533	400
F-W	(2) 3½	SDW22634	6¾	800	800

1. Loads based on equivalent specific gravity of 0.50.
2. Allowable loads include a load duration factor of C_D = 1.00 and may be increased up to C_D = 1.60 per the building code when applicable.
3. SDW EWP-Ply allowable shear loads are from p. 91.
4. Notes to the Designer (p. 90) and Table notes 1–7 (p. 91) are applicable.

SDW TRUSS-PLY — Allowable Loads for Side-Loaded Multi-Ply Lumber Assemblies

Assembly Illustration	Assembly Description	Model No.	Nominal Screw Length (in.)	Reference Allowable Load for Side-Loaded Multi-Ply Assembly per Screw (P_{allow}, lb.)			
				DFL/SP		SPF/HF	
				Head Side	Point Side	Head Side	Point Side
A-W	Two-ply 2x/truss	SDW22300	2 15/16	650	650	510	510
B-W	Desert Three-ply 2x/truss	SDW22438	4⅜	600	410	485	380
B-W	Three-ply 2x/truss	SDW22458	4⅝	600	410	485	380
C-W	Desert Four-ply 2x/truss	SDW22600	6	530	365	450	340
C-W	Four-ply 2x/truss	SDW22638	6⅜	530	365	450	340

1. Loads based on specific gravity of 0.50 for DFL/SP and 0.42 for SPF/HF.
2. Allowable loads include a load duration factor of C_D = 1.00 and may be increased up to C_D = 1.60 per the building code when applicable.
3. SDW Truss-Ply allowable shear loads are from p. 90.
4. Notes to Designer (p. 90) and Table notes 1–5 (p. 92) are applicable.

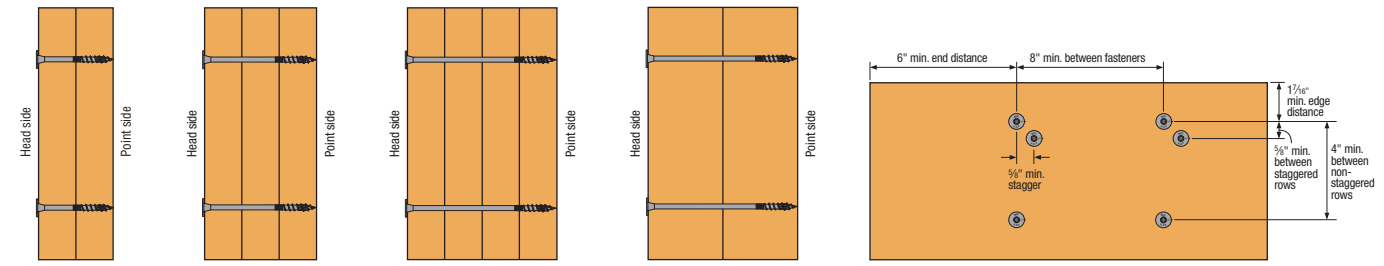

Assembly A-W **Assembly B-W** **Assembly C-W** **Assembly F-W** **Spacing Requirements**

Beam Assembly Descriptions

C-F-2019TECHSUP ©2019 SIMPSON STRONG-TIE COMPANY INC.

Strong-Drive® SDW TRUSS-PLY and EWP-PLY Screws (cont.)

SDW-Built-Up Column Assemblies

Built-up column assemblies shown in this section determine the *Column Stability Coefficient*, K_f, when fastened using SDW Truss-Ply screws. For use with Section 15.3.2 of the 2015 and 2018 NDS, the table provides Strong-Drive SDW Truss-Ply screw substitution information to replace nails or bolts in built-up columns per Section 15.3.3 and 15.3.4 of NDS. Tabulated compression values using these coefficients are listed on pp. 96–97 for common conditions.

Design Parameters for Built-Up Columns using SDW Truss-Ply screws:

- K_f = 0.60 for SDW installed on one side
- K_f = 0.70 for SDW installed on both sides
- $l_e/d \leq 50$
- Each lamination (ply) has a rectangular cross-section and is at least 1½" thick
- All laminations have same face width, d_1
- Faces of adjacent laminations are in contact
- All laminations are full length
- Number of laminations: 2 to 4

SDW TRUSS-PLY Screw Substitution Table for NDS Specifications

No. of Plies	Minimum Nominal Lumber Size (in.)	NDS Specification				SDW Truss-Ply Screw Substitution			
		Fastener[1]	NDS Reference	Installation	Spacing (in.)	Model No.	Description	Installation	Spacing (in.)
2	2 x 4	10d common	Figure 15C	Both sides	6	SDW22300	0.22" dia. X 3"-long screw	One side	6
								Both sides	8
3	2 x 4	30d common	Figure 15C	Both sides	8	SDW22438	0.22" dia. X 4⅜"-long screw	One side	8
								Both sides	9
	2 x 6							One side	9
								Both sides	10
4	2 x 6	½" bolts	Figure 15D	One side	8	SDW22600	0.22" dia. X 6"-long screw	One side	7
								Both sides	8

1. 10d common: 0.148" dia. X 3" long nail.
2. 30d common: 0.207" dia. X 4½" long nail.
3. ½" bolts: ½" bolts with a washer between the wood and the bolt head and between the wood and the nut.

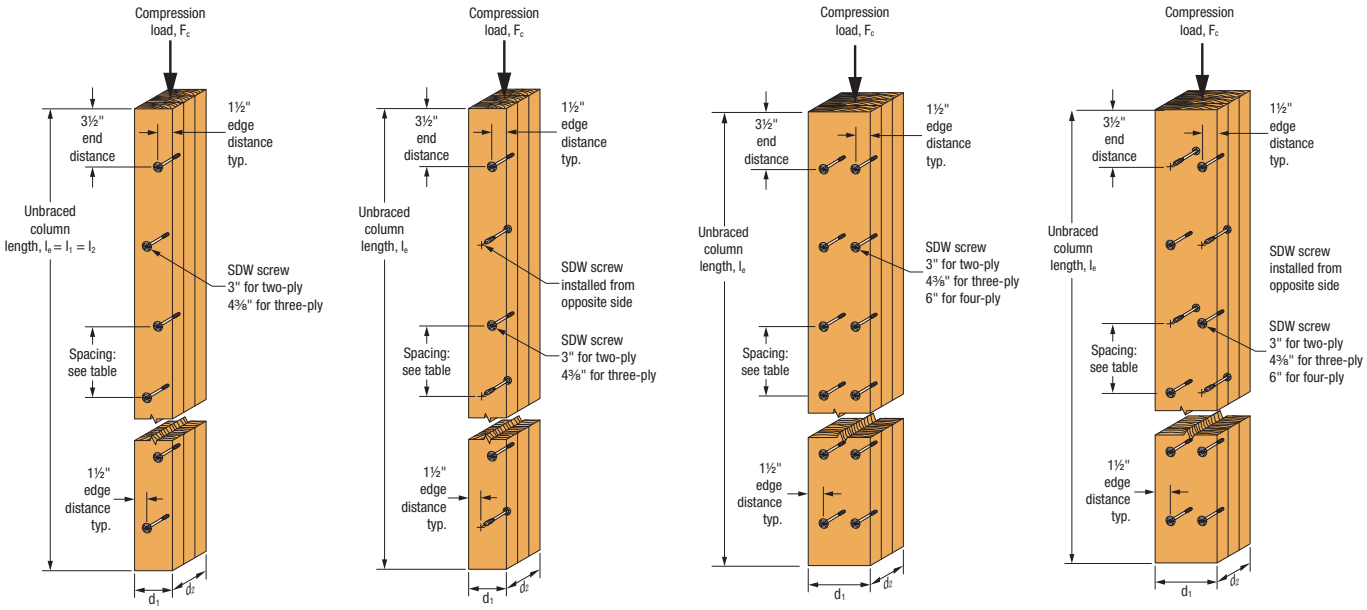

One Side **Both Sides**

2X4 Built-Up Column

One Side **Both Sides**

2X6 Built-Up Column

C-F-2019TECHSUP ©2019 SIMPSON STRONG-TIE COMPANY INC.

Allowable Compression Capacity for Built-Up Columns

Lumber		Fastener			Allowable Compression Capacity Parallel to Grain, F_c' (lb.)																			
Size	No. of Plies	Model No.	Spacing	Installation	Floor (100)					Snow (115)					Roof (125)					Wind/Seismic (160)				
					Unbraced Length, ℓ_e (ft.)					Unbraced Length, ℓ_e (ft.)					Unbraced Length, ℓ_e (ft.)					Unbraced Length, ℓ_e (ft.)				
					8	9	10	11	12	8	9	10	11	12	8	9	10	11	12	8	9	10	11	12
Southern Pine No. 2																								
2x4	2	SDW22300	6	One side	2,405	1,935	1,585	1,320	1,115	2,435	1,950	1,595	1,325	1,120	2,445	1,955	1,600	1,330	1,120	2,480	1,975	1,610	1,335	1,125
				Both sides	2,810	2,255	1,850	1,540	1,300	2,840	2,275	1,860	1,545	1,305	2,855	2,285	1,865	1,550	1,310	2,890	2,305	1,880	1,560	1,315
	3	SDW22438	8	One side	7,145	5,960	4,995	4,225	3,610	7,395	6,105	5,085	4,285	3,650	7,525	6,180	5,130	4,315	3,670	7,835	6,360	5,240	4,385	3,715
				Both sides	7,930	6,430	5,295	4,430	3,755	8,060	6,505	5,345	4,460	3,775	8,130	6,545	5,370	4,475	3,785	8,290	6,640	5,430	4,515	3,810
	4	SDW22600	6	One side	10,575	8,575	7,065	5,905	5,005	10,750	8,675	7,125	5,945	5,030	10,840	8,725	7,160	5,970	5,045	11,055	8,855	7,235	6,020	5,080
			8	Both sides	10,575	8,575	7,065	5,905	5,005	10,750	8,675	7,125	5,945	5,030	10,840	8,725	7,160	5,970	5,045	11,055	8,855	7,235	6,020	5,080
2x6	2	SDW22300	6	One side	3,770	3,035	2,485	2,070	1,750	3,815	3,055	2,500	2,080	1,760	3,835	3,070	2,510	2,085	1,760	3,890	3,100	2,530	2,100	1,770
				Both sides	4,400	3,540	2,900	2,415	2,040	4,450	3,565	2,920	2,430	2,050	4,475	3,580	2,925	2,435	2,055	4,535	3,620	2,950	2,450	2,065
	3	SDW22438	8	One side	11,120	9,300	7,815	6,615	5,655	11,530	9,540	7,960	6,710	5,720	11,745	9,665	8,035	6,760	5,750	12,250	9,955	8,215	6,875	5,830
				Both sides	12,975	10,850	9,115	7,720	6,600	13,450	11,130	9,285	7,830	6,675	13,700	11,275	9,375	7,885	6,710	14,290	11,615	9,585	8,025	6,805
	4	SDW22600	8	One side	20,575	18,380	16,200	14,180	12,400	22,215	19,490	16,920	14,655	12,720	23,130	20,080	17,300	14,900	12,885	25,515	21,545	18,215	15,490	13,275
				Both sides	24,005	21,445	18,895	16,545	14,470	25,915	22,735	19,740	17,100	14,840	26,990	23,430	20,185	17,385	15,035	29,765	25,140	21,250	18,070	15,490
2x8	2	SDW22300	6	One side	4,955	3,990	3,270	2,725	2,305	5,015	4,020	3,290	2,740	2,315	5,045	4,040	3,305	2,750	2,320	5,115	4,085	3,330	2,765	2,330
				Both sides	5,780	4,655	3,815	3,180	2,690	5,850	4,690	3,840	3,195	2,700	5,885	4,715	3,855	3,205	2,705	5,970	4,765	3,885	3,225	2,720
	3	SDW22438	8	One side	14,505	12,170	10,245	8,685	7,430	15,070	12,500	10,445	8,815	7,520	15,360	12,670	10,550	8,885	7,565	16,065	13,075	10,800	9,045	7,675
				Both sides	16,920	14,200	11,950	10,135	8,670	17,580	14,585	12,185	10,285	8,775	17,920	14,780	12,310	10,365	8,825	18,740	15,255	12,600	10,550	8,955
	4	SDW22600	8	One side	26,540	23,825	21,080	18,510	16,225	28,735	25,325	22,070	19,165	16,665	29,970	26,140	22,595	19,505	16,895	33,215	28,155	23,855	20,315	17,435
				Both sides	30,965	27,795	24,590	21,595	18,930	33,520	29,550	25,750	22,360	19,445	34,970	30,495	26,360	22,755	19,710	38,750	32,845	27,830	23,705	20,340
Spruce-Pine-Fir No. 1/No. 2																								
2x4	2	SDW22300	6	One side	2,385	1,925	1,575	1,315	1,110	2,415	1,940	1,590	1,320	1,115	2,430	1,950	1,595	1,325	1,120	2,465	1,970	1,605	1,335	1,125
				Both sides	2,785	2,245	1,840	1,535	1,295	2,820	2,265	1,850	1,540	1,305	2,835	2,275	1,860	1,545	1,305	2,880	2,300	1,875	1,555	1,315
	3	SDW22438	8	One side	6,955	5,850	4,930	4,185	3,580	7,235	6,015	5,030	4,250	3,625	7,380	6,095	5,080	4,280	3,645	7,730	6,300	5,205	4,360	3,700
				Both sides	7,830	6,375	5,260	4,405	3,735	7,980	6,460	5,315	4,440	3,760	8,055	6,500	5,340	4,460	3,775	8,235	6,610	5,405	4,500	3,805
	4	SDW22600	6	One side	10,445	8,495	7,015	5,875	4,985	10,640	8,610	7,085	5,920	5,015	10,740	8,670	7,120	5,945	5,030	10,980	8,810	7,210	6,000	5,070
			8	Both sides	10,445	8,495	7,015	5,875	4,985	10,640	8,610	7,085	5,920	5,015	10,740	8,670	7,120	5,945	5,030	10,980	8,810	7,210	6,000	5,070
2x6	2	SDW22300	6	One side	3,735	3,010	2,470	2,060	1,745	3,785	3,040	2,490	2,075	1,755	3,810	3,055	2,500	2,080	1,755	3,870	3,090	2,520	2,095	1,765
				Both sides	4,360	3,515	2,885	2,405	2,035	4,415	3,545	2,905	2,420	2,045	4,445	3,565	2,915	2,425	2,050	4,515	3,605	2,940	2,445	2,060
	3	SDW22438	8	One side	10,780	9,100	7,690	6,535	5,605	11,240	9,370	7,855	6,645	5,675	11,480	9,510	7,945	6,700	5,710	12,060	9,850	8,150	6,835	5,800
				Both sides	12,575	10,615	8,970	7,625	6,535	13,115	10,935	9,165	7,750	6,620	13,395	11,100	9,265	7,815	6,665	14,070	11,490	9,505	7,970	6,770
	4	SDW22600	8	One side	19,335	17,500	15,600	13,780	12,130	21,035	18,700	16,410	14,320	12,495	22,010	19,355	16,835	14,600	12,685	24,600	20,995	17,875	15,270	13,130
				Both sides	22,555	20,420	18,200	16,075	14,155	24,540	21,815	19,140	16,705	14,580	25,675	22,580	19,640	17,030	14,795	28,700	24,495	20,850	17,815	15,320
2x8	2	SDW22300	6	One side	4,900	3,955	3,250	2,715	2,295	4,965	3,995	3,275	2,730	2,305	5,000	4,015	3,290	2,735	2,315	5,085	4,065	3,320	2,760	2,325
				Both sides	5,715	4,615	3,790	3,165	2,680	5,795	4,660	3,820	3,185	2,690	5,835	4,685	3,835	3,195	2,700	5,935	4,745	3,870	3,220	2,715
	3	SDW22438	8	One side	13,980	11,860	10,050	8,565	7,350	14,625	12,240	10,285	8,715	7,450	14,960	12,440	10,410	8,790	7,505	15,775	12,910	10,695	8,980	7,630
				Both sides	16,310	13,835	11,730	9,990	8,575	17,060	14,280	12,000	10,165	8,695	17,455	14,510	12,145	10,260	8,755	18,405	15,060	12,480	10,475	8,900
	4	SDW22600	8	One side	24,725	22,510	20,175	17,900	15,810	26,990	24,140	21,290	18,650	16,320	28,300	25,040	21,885	19,045	16,585	31,835	27,315	23,335	19,985	17,210
				Both sides	28,850	26,265	23,540	20,885	18,445	31,490	28,165	24,840	21,760	19,040	33,020	29,210	25,530	22,215	19,350	37,140	31,865	27,225	23,315	20,080

1. Adjustment factors: [C_M, C_t, C_i] = 1.0. For C_F refer to NDS, Table 4A.
2. For LRFD, see NDS, Section 4.3.
3. Compression perpendicular to grain has not been evaluated.
4. All SDW screws have an E-coat™. Simpson Strong-Tie® has conducted testing per Acceptance Criteria AC257, showing in dry conditions E-coat performs equivalent to hot-dip galvanized (HDG) coating.
5. For fire retardant treated (FRT) wood, additional reduction factors may need to be applied based on the manufacturer's recommendations.
6. The column capacities are evalutaed for column being completely unbraced in both strong and weak axis. $l_e = l_1 = l_2$.

C-F-2019TECHSUP ©2019 SIMPSON STRONG-TIE COMPANY INC.

Multi-Ply Fastening

Allowable Compression Capacity for Built-Up Columns

Lumber		Fastener			Allowable Compression Capacity Parallel to Grain, F_c' (lb.)																			
Size	No. of Plies	Model No.	Spacing	Installation	Floor (100)					Snow (115)					Roof (125)					Wind/Seismic (160)				
					Unbraced Length, ℓ_e (ft.)					Unbraced Length, ℓ_e (ft.)					Unbraced Length, ℓ_e (ft.)					Unbraced Length, ℓ_e (ft.)				
					8	9	10	11	12	8	9	10	11	12	8	9	10	11	12	8	9	10	11	12
Douglas-Fir Larch No. 2																								
2x4	2	SDW22300	6	One side	2,725	2,190	1,795	1,495	1,265	2,755	2,210	1,810	1,505	1,270	2,770	2,220	1,815	1,510	1,275	2,810	2,245	1,830	1,520	1,280
				Both sides	3,175	2,555	2,095	1,745	1,475	3,215	2,580	2,110	1,755	1,485	3,235	2,590	2,115	1,760	1,485	3,280	2,615	2,135	1,770	1,495
	3	SDW22438	8	One side	7,990	6,695	5,635	4,775	4,085	8,295	6,875	5,745	4,845	4,130	8,455	6,970	5,800	4,880	4,155	8,835	7,185	5,935	4,970	4,215
				Both sides	8,950	7,270	6,000	5,020	4,255	9,110	7,365	6,055	5,055	4,280	9,190	7,410	6,085	5,075	4,295	9,390	7,530	6,160	5,125	4,330
	4	SDW22600	6	One side	11,930	9,695	7,995	6,695	5,675	12,145	9,820	8,075	6,745	5,710	12,255	9,880	8,115	6,770	5,725	12,520	10,035	8,210	6,835	5,770
			8	Both sides	11,930	9,695	7,995	6,695	5,675	12,145	9,820	8,075	6,745	5,710	12,255	9,880	8,115	6,770	5,725	12,520	10,035	8,210	6,835	5,770
2x6	2	SDW22300	6	One side	4,260	3,435	2,815	2,350	1,985	4,315	3,465	2,835	2,360	1,995	4,340	3,480	2,845	2,370	2,000	4,405	3,520	2,870	2,385	2,010
				Both sides	4,970	4,005	3,285	2,740	2,320	5,035	4,040	3,310	2,755	2,330	5,065	4,060	3,320	2,765	2,335	5,140	4,105	3,350	2,780	2,345
	3	SDW22438	8	One side	12,385	10,425	8,790	7,465	6,390	12,890	10,720	8,975	7,580	6,470	13,155	10,875	9,065	7,640	6,510	13,790	11,240	9,290	7,785	6,610
				Both sides	14,450	12,160	10,255	8,710	7,455	15,040	12,510	10,470	8,845	7,550	15,345	12,685	10,580	8,915	7,595	16,085	13,115	10,840	9,085	7,710
	4	SDW22600	8	One side	22,435	20,225	17,960	15,820	13,895	24,350	21,555	18,850	16,410	14,295	25,440	22,280	19,320	16,715	14,500	28,315	24,085	20,455	17,445	14,985
				Both sides	26,170	23,595	20,955	18,455	16,215	28,405	25,145	21,990	19,145	16,675	29,675	25,990	22,540	19,500	16,915	33,035	28,095	23,860	20,355	17,485
2x8	2	SDW22300	6	One side	5,590	4,510	3,705	3,090	2,615	5,665	4,555	3,730	3,105	2,625	5,705	4,575	3,745	3,115	2,635	5,795	4,630	3,780	3,140	2,650
				Both sides	6,525	5,260	4,320	3,605	3,050	6,610	5,310	4,350	3,625	3,065	6,655	5,340	4,370	3,635	3,070	6,760	5,400	4,410	3,660	3,090
	3	SDW22438	8	One side	16,075	13,590	11,495	9,780	8,385	16,780	14,010	11,755	9,945	8,495	17,150	14,225	11,885	10,030	8,555	18,035	14,740	12,200	10,235	8,690
				Both sides	18,755	15,855	13,415	11,410	9,785	19,580	16,345	13,710	11,605	9,915	20,010	16,595	13,865	11,700	9,980	21,045	17,195	14,235	11,940	10,140
	4	SDW22600	8	One side	28,710	26,035	23,245	20,565	18,125	31,270	27,850	24,475	21,385	18,680	32,740	28,845	25,130	21,815	18,965	36,670	31,350	26,715	22,840	19,650
				Both sides	33,495	30,375	27,120	23,990	21,145	36,480	32,490	28,555	24,950	21,795	38,195	33,650	29,315	25,450	22,125	42,780	36,575	31,165	26,645	22,925
Hem-Fir No. 2																								
2x4	2	SDW22300	6	One side	2,235	1,795	1,465	1,220	1,030	2,260	1,805	1,475	1,225	1,035	2,270	1,810	1,480	1,230	1,035	2,295	1,830	1,490	1,235	1,040
				Both sides	2,610	2,095	1,710	1,425	1,205	2,635	2,105	1,720	1,430	1,205	2,645	2,115	1,725	1,435	1,210	2,675	2,130	1,735	1,440	1,215
	3	SDW22438	8	One side	6,775	5,600	4,670	3,940	3,355	6,975	5,715	4,745	3,985	3,385	7,075	5,775	4,780	4,010	3,405	7,320	5,920	4,865	4,065	3,440
				Both sides	7,410	5,985	4,915	4,105	3,475	7,510	6,045	4,955	4,130	3,490	7,565	6,075	4,975	4,140	3,500	7,695	6,150	5,020	4,175	3,520
	4	SDW22600	6	One side	9,875	7,975	6,555	5,475	4,635	10,015	8,060	6,605	5,505	4,655	10,085	8,100	6,630	5,525	4,665	10,260	8,200	6,695	5,565	4,695
			8	Both sides	9,875	7,975	6,555	5,475	4,635	10,015	8,060	6,605	5,505	4,655	10,085	8,100	6,630	5,525	4,665	10,260	8,200	6,695	5,565	4,695
2x6	2	SDW22300	6	One side	3,505	2,810	2,300	1,915	1,620	3,540	2,830	2,315	1,925	1,625	3,555	2,840	2,320	1,930	1,625	3,600	2,870	2,335	1,940	1,635
				Both sides	4,090	3,280	2,685	2,235	1,890	4,130	3,305	2,700	2,245	1,895	4,150	3,315	2,705	2,250	1,900	4,200	3,345	2,725	2,265	1,905
	3	SDW22438	8	One side	10,535	8,740	7,300	6,165	5,255	10,865	8,930	7,420	6,240	5,310	11,035	9,030	7,480	6,280	5,335	11,445	9,265	7,625	6,375	5,400
				Both sides	12,290	10,195	8,520	7,190	6,135	12,675	10,420	8,655	7,280	6,195	12,875	10,535	8,730	7,325	6,225	13,350	10,810	8,895	7,435	6,300
	4	SDW22600	8	One side	20,080	17,705	15,430	13,400	11,650	21,510	18,630	16,020	13,780	11,905	22,295	19,120	16,325	13,980	12,040	24,275	20,310	17,060	14,450	12,355
				Both sides	23,430	20,655	18,000	15,630	13,595	25,095	21,735	18,690	16,080	13,890	26,010	22,305	19,050	16,310	14,045	28,320	23,695	19,905	16,860	14,415
2x8	2	SDW22300	6	One side	4,605	3,695	3,025	2,520	2,130	4,650	3,725	3,045	2,535	2,140	4,675	3,740	3,055	2,540	2,145	4,735	3,775	3,075	2,555	2,155
				Both sides	5,370	4,315	3,530	2,940	2,485	5,425	4,345	3,550	2,955	2,495	5,455	4,365	3,565	2,960	2,500	5,525	4,405	3,590	2,980	2,510
	3	SDW22438	8	One side	13,720	11,425	9,570	8,085	6,905	14,185	11,695	9,735	8,195	6,975	14,425	11,830	9,815	8,250	7,015	14,995	12,160	10,020	8,380	7,100
				Both sides	16,005	13,325	11,160	9,435	8,055	16,550	13,640	11,355	9,560	8,140	16,830	13,805	11,455	9,625	8,180	17,495	14,190	11,690	9,775	8,285
	4	SDW22600	8	One side	25,810	22,890	20,050	17,470	15,230	27,745	24,170	20,875	18,010	15,590	28,820	24,850	21,300	18,285	15,775	31,560	26,510	22,330	18,945	16,215
				Both sides	30,115	26,705	23,390	20,385	17,770	32,370	28,195	24,350	21,010	18,190	33,620	28,990	24,850	21,335	18,405	36,820	30,930	26,055	22,105	18,920

1. Adjustment factors: [C_M, C_t, C_i] = 1.0. For C_F refer to NDS, Table 4A.
2. For LRFD, see NDS, Section 4.3.
3. Compression perpendicular to grain has not been evaluated.
4. All SDW screws have an E-coat™. Simpson Strong-Tie® has conducted testing per Acceptance Criteria AC257, showing in dry conditions E-coat performs equivalent to hot-dip galvanized (HDG) coating.
5. For fire retardant treated (FRT) wood, additional reduction factors may need to be applied based on the manufacturer's recommendations.
6. The column capacities are evalutaed for column being completely unbraced in both strong and weak axis. $l_e = l_1 = l_2$.

C-F-2019TECHSUP ©2019 SIMPSON STRONG-TIE COMPANY INC.

Strong-Drive® WSV SUBFLOOR Screw

Simpson Strong-Tie® Strong Drive® WSV flathead, countersunk wood screws are a fast and reliable method for attaching two-ply and three-ply girder trusses.

For more information, see p. 202, C-F-2019 Fastening Systems Catalog

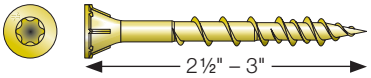

WSV — Allowable Loads Comparison of Common Fasteners Used to Attach Truss Plies Together

Size (in.)	Model No.	Diameter (in.)	Reference Shear (lb.)		Reference Withdrawal (lb.)	
			DFL/SP	SPF/HF	DFL/SP	SPF/HF
#9 x 2½	WSV212S	0.132	93	73	128	141
#9 x 3	WSV3S	0.132	102	87	211	141
0.120 x 3 nail[5]	—	0.120	81	69	44	28
0.131 x 3 nail[5]	—	0.131	97	82	48	31

1. Table values are based on attachment of a 1½" side member to a 1½" main member of the same species and grade.
2. Table values are based on the NDS, C_D=1.0. Values shall be multiplied by all applicable factors, such as duration of load, etc. except where noted.
3. Specific Gravities (G) assumed: DFL G = 0.50, SP G = 0.55, SPF G = 0.42.
4. For a series of loads to be considered a uniform load, the loads must be applied no further apart than 24" o.c.
5. Assumes nail F_{yb} = 100 ksi.
6. WSV212S and WSV3S withdrawal values based on testing per AC233.

Installation:

- Screw spacing shall be in accordance with the fastener schedule provided on the Truss Design Drawing or as otherwise approved by the Truss Designer. Screw spacing shall not exceed 12" on center and shall not be less than 3" on center.
- WSV screws may be installed with the screw heads in either the loaded or unloaded ply. Do not overdrive screws.
- For three-ply girder assemblies, the WSV screws may be installed from the same side as each ply is applied (no flipping of the truss is required) in accordance with BCSI (2006 edition). Girders that are fastened together at the jobsite must have the fastener heads visible for inspection.
- Stagger the screws in the third ply a minimum of 1" from the screws installed into the first two plies.
- Individual screw locations may be adjusted up to ½ of the required screw spacing to avoid conflicts with other hardware or to avoid lumber defects. (3" minimum spacing still required.)
- Use minimum of 3"-long fasteners to attach hangers to the girder truss.
- A 2,500-rpm motor is recommended

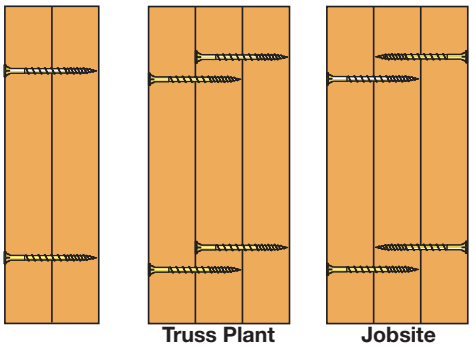

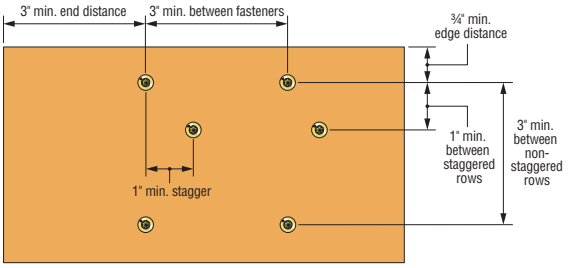

Typical Spacing for WSV Screw

Ply-to-Ply Connection Comparison for a 30'-Long Three-Ply Girder — Bottom Chord Loading

Sample Bottom Chord Nailing Requirement for Three-ply Girder Using 0.120 x 3" Collated Nails

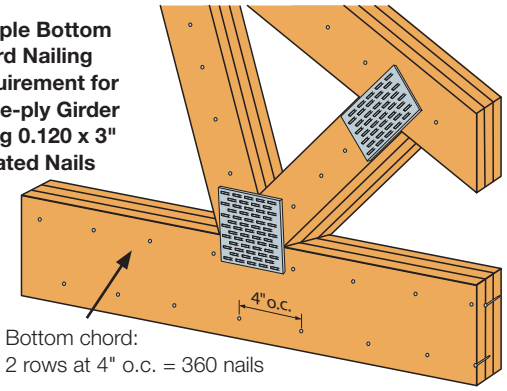

Bottom chord:
2 rows at 4" o.c. = 360 nails

Alternate Fastening Using WSV3S Screw

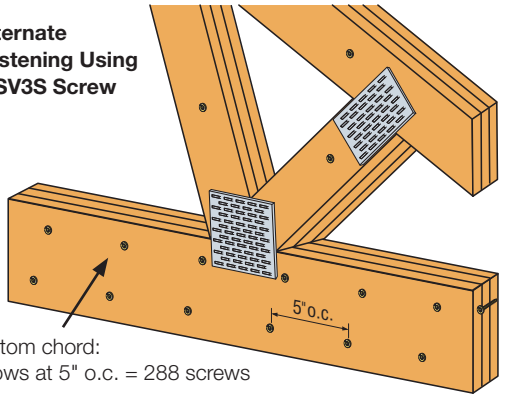

Bottom chord:
2 rows at 5" o.c. = 288 screws

Examples based on three-ply girder spanning 30', 2x6 southern pine bottom chords, 825 plf bottom cord load and 1.15 load duration. Nail and screw spacing is repeated for each layer.

C-F-2019TECHSUP ©2019 SIMPSON STRONG-TIE COMPANY INC.

Structural Screw Applications

Codes/Standards: IAMPO UES ER-262, IAPMO UES ER-192

Simpson Strong-Tie evaluated the following screws for use in cross-laminated timber (CLT) butt-joint and half-lap diaphragm connections:

- Strong-Drive SDWC TRUSS Screw (SDWC15600, p. 84, C-F-2019)
- Strong-Drive SDWS TIMBER Screw (SDWS22400DB and SDWS22600DB, p. 53, C-F-2019)
- Strong-Drive SDWS LOG Screw (SDWS19600, p. 83, C-F-2019)
- Strong-Drive SDWV SOLE-TO-RIM Screw (SDWV13400, p. 87, C-F-2019)

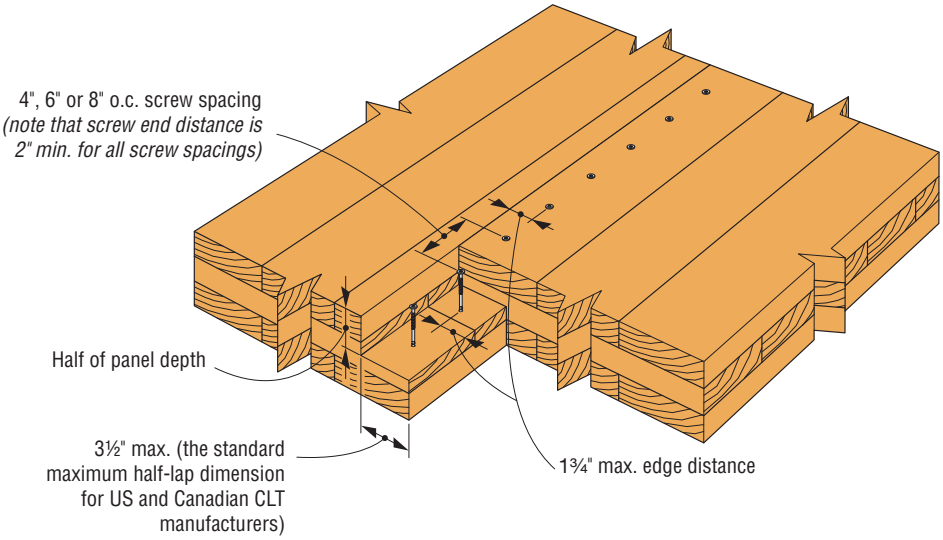

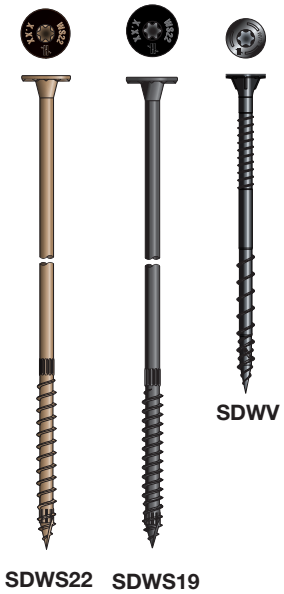

Typical Half-Lap Installation with SDWV13400Z Screws in Three-Ply CLT Panel
(SDWS22400DB in three ply, and SDWS19600 in five ply or seven ply similar)

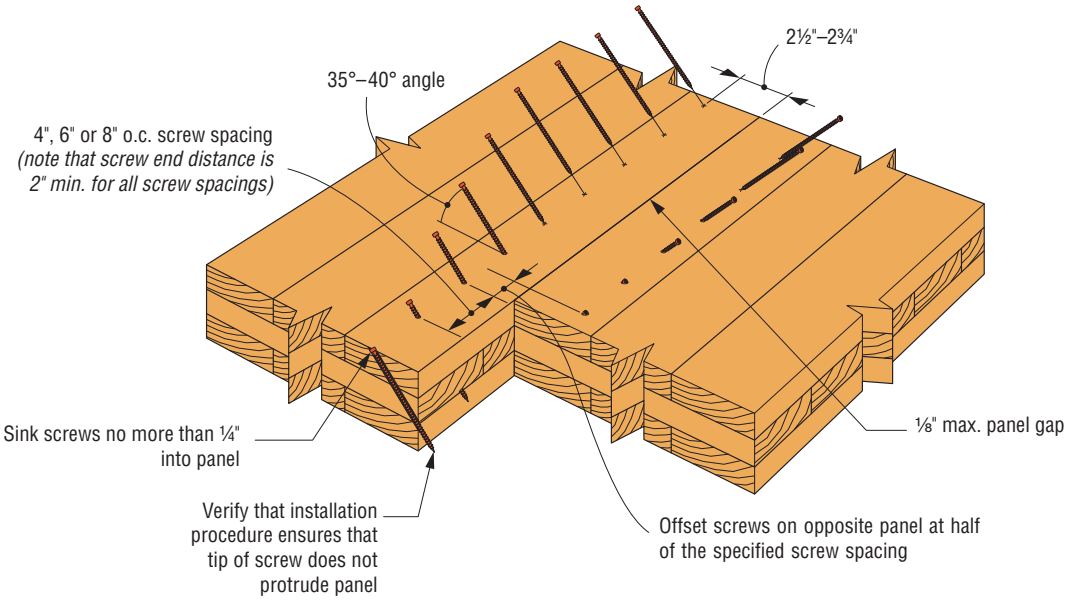

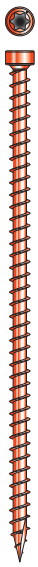

Typical SDWC15600 Installation with Three-Ply CLT

C-F-2019TECHSUP ©2019 SIMPSON STRONG-TIE COMPANY INC.

Mass Timber/Cross-Laminated Timber Fastening

Allowable Shear Loads for CLT Diaphragm Butt and Half-Lap Joints Using Simpson Strong-Tie® Strong-Drive® Screws

Diaphragm Joint	CLT Layup	Fastener Model (Dia. x Length) (in.)	Screw Spacing (in.)	Reference Allowable Shear (lb./ft.)		Slip Modulus (lb./in.)
				DFL/SP	SPF/HF	
Butt joint	Three ply	SDWC15600 (0.15 x 6)	4	1,440	1,440	4,760
			6	960	960	
			8	720	720	
Half-lap	Three ply	SDWS22400DB (0.22 x 4)	4	1,035	780	8,330
			6	690	520	
			8	520	390	
		SDWV13400 (#10 x 4)	4	555	480	4,000
			6	370	320	
			8	280	240	
	Five ply	SDWS22600DB (0.22 x 6)	4	930	840	8,330
			6	620	560	
			8	465	420	
		SDWS19600 (0.19 x 6)	4	795	795	7,140
			6	530	530	
			8	400	400	

1. Allowable shear loads are shown for wood load duration C_D=1.0; duration of load may be increased as permitted by the local building code up to C_D=1.6.
2. For butt joints with the SDWC Truss screws, the allowable load is for a pair of screws spaced as indicated.
3. CLT laminae thickness assumed to be 1.375".
4. DFL: Douglas fir–larch; SP: southern pine; SPF: spruce-pine-fir; HF: hem-fir. Allowable shear loads for SPF South are to be 0.85 (SPF/HF).
5. Slip modulus is a single-fastener basis and is from the slope of a line from 10 to 40 percent of peak load on the load-deflection curve. For the SDWC15600 screw, the slip modulus is estimated.

Simpson Strong-Tie has evaluated Strong-Drive SDWS Timber Screws (SDWS22400DB and SDWS22600DB) for use in cross-laminated timber (CLT) diaphragm single-surface splines. The SDWS Timber screws are evaluated as an alternate threaded dowel fastener in evaluation report IAPMO-UES ER192.

Typical installation is illustrated in Figure 1 and Figure 2. The same number of SDWS Timber screws shall be used to fasten the spline to both diaphragm panels connected by the spline, and the fasteners shall be similarly spaced in both diaphragm panels of the spline connection.

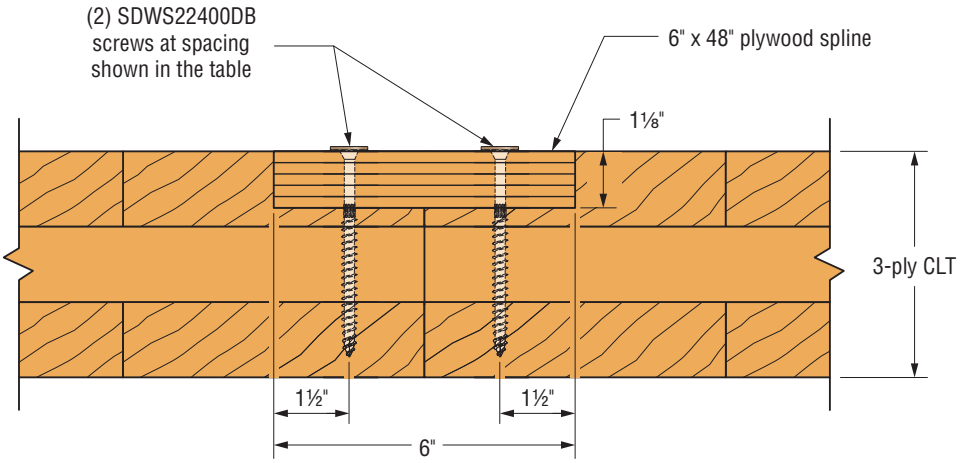

Figure 1: Typical elevation — Single-surface spline with three-ply CLT panels, 1⅛" spline (plywood shown, 6" width) and 4" SDWS TIMBER screws (SDWS22400DB).

C-F-2019TECHSUP ©2019 SIMPSON STRONG-TIE COMPANY INC.

Mass Timber/Cross-Laminated Timber Fastening

Allowable Shear Loads

CLT Layup	Fastener Model (Dia. x Length) (in.)	Fastener Spacing (in.)	Allowable Shear Load per Fastener (lb./ft.)		Slip Modulus per Fastener (lb./in.)	
			DFL/SP	SPF/HF	DFL/SP	SPF/HF
Three ply	SDWS22400DB (0.22 x 4)	8	560	505	6,700	6,700
		6	750	670	6,700	6,700
		4	1,125	1,005	6,700	6,700
Five ply, Seven ply	SDWS22600DB (0.22 x 6)	8	560	505	6,700	6,700
		6	750	670	6,700	6,700
		4	1,125	1,005	6,700	6,700

1. Allowable loads have been increased for wind or seismic loading with no further increase allowed: reduce where other loads govern.
2. Applicable adjustments shall be applied following the ANSI/AWC NDS-15 or NDS-18.
3. Tabulated values are applicable for splines in the major and minor strength directions.
4. For SDWS solutions, use 1⅛" APA rated Sturd-I-Floor wood structural panel surface splines.
5. Screws: 0.22" x 4" SDWS = model SDWS22400DB; 0.22" x 6" SDWS = model SDWS22600DB.
6. CLT panel minimum thickness is: 3 ply = 4.125"; 5 ply = 6.875"; 7 ply = 9.625".
7. The component of diaphragm deflection due to fastener slip at panel-to-panel joints is calculated as,

$\delta_f = CLe_n$

where,

$C = (1/P_L + 1/P_w)/2$

P_L = Length of individual CLT panel (ft.)

P_w = Width of individual CLT panel (ft.)

L = Overall length of diaphragm (ft.)

e_n = Force per fastener [lb.]/Slip modulus [lb./in.]

(Reference — Applied Technology Council. 1981. *Guidelines for the design of horizontal wood diaphragms.* Redwood City, CA.)

For additional information on slip modulus, see:

1. American Wood Council. 2018. *ANSI/AWC National Design Specification for Wood Construction, NDS®*, Section 11.3.6. AWC, Leesburg, VA.
2. Zhan, J.J. 1991. *Design equation for multiple-fastener wood connections.* US Forest Service, Forest Products Laboratory, Madison, WI.

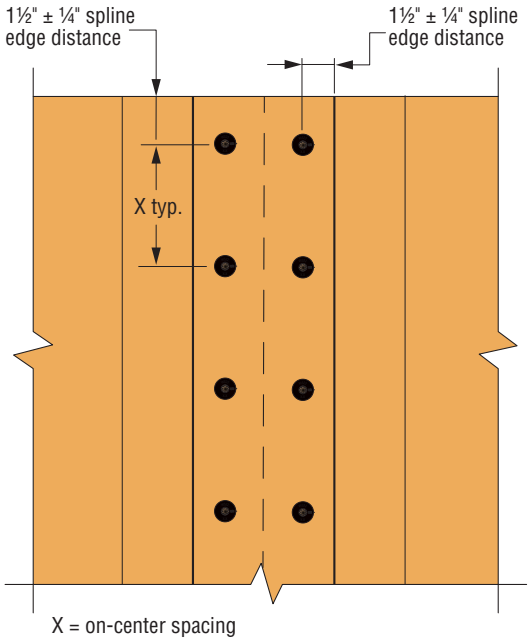

Figure 2: Fastener layout plan — Fastener end distance in the spline shall be 1.5±0.25", and fastener edge distance in the spline shall be 1.5±0.25" The nominal fastener spacing is "X".

C-F-2019TECHSUP ©2019 SIMPSON STRONG-TIE COMPANY INC.

Strength that weathers the elements.
Deck-Drive® DWP WOOD SS Screw

Deck Applications

Fastening for Decks
Deck-Drive™ DWP WOOD SS Screw 104
Deck-Drive™ DCU COMPOSITE Screw. 105

Deck Construction — Ledgers
Strong-Drive® SDWS TIMBER Screw 106
Strong-Drive® SDWS TIMBER SS Screw 107
Strong-Drive® SDWH TIMBER-HEX Screw. 108
Strong-Drive® SDWH TIMBER-HEX and SDWS TIMBER Screw 109
Strong-Drive® SDWH TIMBER-HEX HDG Screw 111
Strong-Drive® SDWH TIMBER-HEX SS Screw. 112
Strong-Drive® SDS HEAVY-DUTY CONNECTOR Screw 114

Deck Construction — Guard Posts
Strong-Drive® SDWS TIMBER Screw 115

Deck Construction — Guard Rails
Strong-Drive® SDWS FRAMING Screw. 119

Deck Construction — Wood Balusters
Fasteners for Wood Balluster Installations 121

Deck Construction — Beam-to-Post
Strong-Drive® SDWH TIMBER-HEX HDG Screw 123

SIMPSON Strong-Tie®

Deck-Drive™ DWP WOOD SS Screw

High- to Severe-Exposure Wood Decking Applications

The #10 Deck-Drive DWP Wood SS flat-head screws are deck fasteners that have been tested in accordance with ICC-ES acceptance criteria AC233 and are load rated for withdrawal resistance. These screws are a great solution for exterior connections where they will be exposed to high or severe corrosion.

For more information, see p. 63, C-F-2019 Fastening Systems Catalog. See pp. 30–31 for allowable shear and withdrawal for #12 and #14 Strong-Drive® DWP WOOD SS screws.

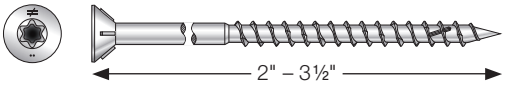

DWP WOOD SS Screw — Allowable Withdrawal and Pull-Throught Loads

Size x L (in.)	Model No.	Thread Length (in.)	Head Diam. (in.)	Allowable Screw Tension (lb.)	Reference Withdrawal, W (lb./in.)		Reference Pull-Through for 1½" Side Memeber, P (lb.)	
					DFL/SP	SPF/HF	DFL/SP	SPF/HF
#10 x 2	T10200WP S10200WP	1.50	0.34	480	130	100	140	110
#10 x 2½	T10250WP S10250WP	2.00						
#10 x 3	T10300WP S10300WP	2.16						
#10 x 3½	T10350WP S10350WP	2.49						

1. The tabulated allowable screw tension value is the tensile strength of the steel screw and may not be multiplied by any adjustment factors.
2. The tabulated reference withdrawal design value, W, is in pounds per inch of the thread penetration into the side grain of the main member.
3. The tabulated reference pull-through design value, P, is the allowable load for the fastener head pull-through for a minimum 1½" thick side member.
4. Tabulated reference withdrawal and pull-through design values, W and P, are shown at a load duration factor, C_D, = 1.0 and a wet service factor, C_M, = 1.0. Loads may be increased for load duration per the building code up to a C_D = 1.6. Tabulated values must be multiplied by all applicable adjustment factors from the NDS as referenced in the IBC or IRC.
5. Embedded thread length is that portion held in the main member including the screw tip.

C-F-2019TECHSUP ©2019 SIMPSON STRONG-TIE COMPANY INC.

SIMPSON Strong-Tie®

Deck-Drive™ DCU COMPOSITE Screw

Uplift Performance

For more information, see pp. 76–77, C-F-2019 Fastening Systems Catalog

The table below shows allowable uplift loads for Simpson Strong-Tie® Deck-Drive DCU Composite screws (#10 dia. x 2 ¾" length, model no. DCU234) when they are used to attach non-wood deck boards to framing in face screw installations.

In an uplift scenario, there are two relevant modes of failure for screw connections in deck boards: screw pull-through of the deck board and screw withdrawal from the framing member. Pull-through testing was performed using 1" nominal thickness PVC and 1" and 2" nominal thickness Composite and High-Density Polyethylene (HDPE) decking products. The tests included conditions where the DCU composite screws were installed both flush to the surface and countersunk for the use of the Deck-Drive DCU screw plug solution, as shown in the figures below. Withdrawal testing was performed with the DCU screw embedded 1⅜" in Southern Pine lumber. The resulting allowable loads using a factor of safety of 5 are provided in the table below.

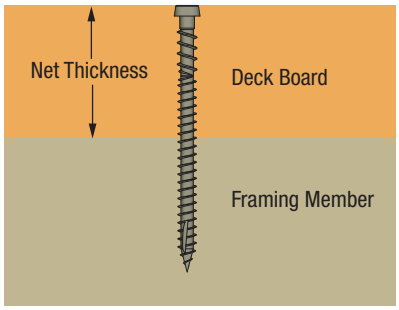

Flush Installation of DCU Composite Screw

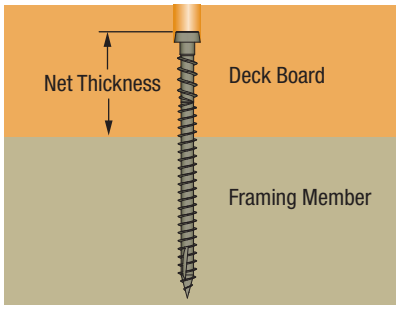

Countersunk Installation of DCU Composite Screw

Allowable Uplift Loads for DCU Composite Screws Used to Fasten PVC, Composite, and HDPE Deck Boards to Southern Pine Framing[1,2]

Configuration	Deck Board (Nominal Thickness, Material)	Net Thickness (in.)	Allowable Uplift per Screw (lbf)
Flush Installation	1" PVC	1.000	101
	1" Composite	1.000	148
	1" HDPE	1.000	93
	2" Composite	1.375	260
	2" HDPE	1.375	191
Countersunk Installation	1" PVC	0.725	77
	1"Composite	0.725	128
	1" HDPE	0.725	77
	2" Composite	1.100	235
	2" HDPE	1.100	150

1. Allowable uplift is limited by fastener pull-through value, which is the lessor of fastener pull-through and withdrawal. No other properties of the deck materials or deck construction are considered.
2. Withdrawal property is based on duration of load of $C_D = 1.6$ and wet service factor of $C_M = 0.7$.

C-F-2019TECHSUP ©2019 SIMPSON STRONG-TIE COMPANY INC.

SIMPSON Strong-Tie®

Deck Applications

Strong-Drive® SDWS TIMBER Screw

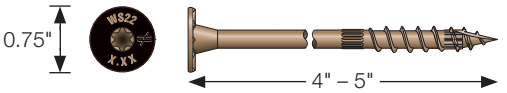

For more information, see p. 53, C-F-2019 Fastening Systems Catalog

SDWS Timber Screw — 2015 and 2018 IRC Compliant Spacing for a Sawn Lumber Deck Ledger-to-Rim Board

Loading Condition	Nominal Ledger Size (in.)	Size (in.)	Model No.	Rim Board Material and Minimum Size	Maximum Deck Joist Span						
					Up to 6 ft.	Up to 8 ft.	Up to 10 ft.	Up to 12 ft.	Up to 14 ft.	Up to 16 ft.	Up to 18 ft.
					Maximum On-Center Spacing of Fasteners (in.)						
40 psf Live 10 psf Dead	2x	0.22 x 4	SDWS22400DB	1" OSB	14	10	8	7	6	5	5
				1" LVL							
				1⅛" OSB	16	12	10	8	7	6	5
				1 5/16" LVL							
				1¼" LSL							
				2x SP, DFL — 2x SPF, HF	22	16	13	11	9	8	7
60 psf Live 10 psf Dead	2x	0.22 x 4	SDWS22400DB	1" OSB	10	7	6	5	4	4	—
				1" LVL							
				1⅛" OSB	12	9	7	6	5	4	4
				1 5/16" LVL							
				1¼" LSL							
				2x SP, DFL — 2x SPF, HF	15	12	9	8	7	6	5
40 psf Live 10 psf Dead	(2) 2x	0.22 x 5	SDWS22500DB	1" OSB	15	12	9	8	7	6	5
				1" LVL							
				1⅛" OSB	16	12	10	8	7	6	5
				1 5/16" LVL							
				1¼" LSL							
				2x SP, DFL — 2x SPF, HF	16	12	10	8	7	6	5
60 psf Live 10 psf Dead	(2) 2x	0.22 x 5	SDWS22500DB	1" OSB	11	8	7	6	5	4	4
				1" LVL							
				1⅛" OSB	12	9	7	6	5	4	4
				1 5/16" LVL							
				1¼" LSL							
				2x SP, DFL — 2x SPF, HF	12	9	7	6	5	4	4

1. SDWS screw spacing values are equivalent to 2018 IRC Table R507.9.1.3(1) and 2015 IRC Table R507.2. The table above also provides SDWS screw spacing for a wide range of materials commonly used for rim board, and an alternate loading condition as required by some jurisdictions.
2. Sawn lumber rim board shall be spruce-pine-fir, hem-fir, Douglas fir–larch, or southern pine species. Ledger shall be hem-fir, Douglas fir–larch, or southern pine species.
3. Fastener spacings are based on the lesser of single fastener ICC-ES AC233 testing of the Strong-Drive SDWS Timber screw with a safety factor of 5.0 or ICC-ES AC13 assembly testing with a factor of safety of 5.0. Spacing includes NDS wet service factor adjustment.
4. Multiple ledger plies shall be fastened together per code independent of the SDWS screws.
5. Rows of screws shall be vertically offset and evenly staggered. Screws shall be placed 1½" to 2" from the top and bottom of the ledger or rim board with 3" minimum and 6" maximum between rows and spaced per the table. End screws shall be located 6" from the end and at 1½" to 2" from the bottom of the ledger. For screws located at least 2" but less than 6" from the end, use 50% of the load per screw and 50% of the table spacing between the end screw and the adjacent screw, and for screws located between 2" and 4" from the end, predrill using a 5/32" drill.
6. Structural sheathing between the ledger and rim board shall be a maximum of ½" thick and fastened per code.
7. See pp. 109–110 for ledger-to-rim attachment with ½" gap.

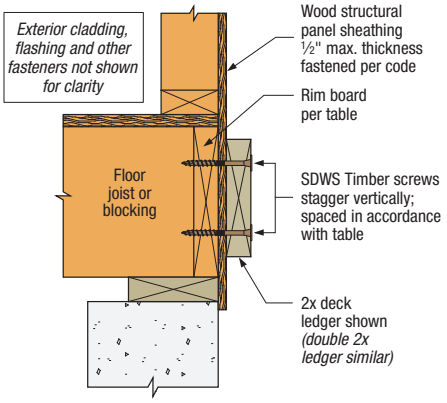

Ledger-to-Rim Board Assembly
(wood-framed lower floor acceptable,concrete wall shown for illustration purposes; other fasteners not shown for clarity.)

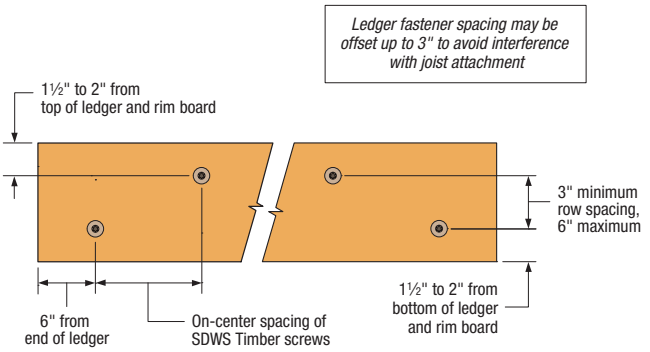

SDWS Timber Screw Spacing Detail for Ledgers

C-F-2019TECHSUP ©2019 SIMPSON STRONG-TIE COMPANY INC.

SIMPSON Strong-Tie®

Strong-Drive® SDWS TIMBER SS Screw

Structural Wood and Engineered Wood Connections including Docks, Piers, Boardwalks and Ledgers

Deisgned to provide an easy-to-install, low-torque driving, high-strength, severe-corrosion resistant alternatives to through bolting, traditional lags and spikes. The Strong-Drive SDWS Timber SS screw is a premium solution for heavy-duty structural applications. Type 316 stainless steel provide severe-corrosion resistance, making it suitable for exterior and preservative-treated wood applications. For installation geometries, please refer to the previous page.

For more information, see p. 54, C-F-2019 Fastening Systems Catalog

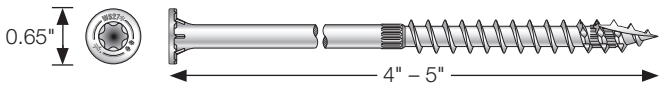

SDWS27SS — 2015 and 2018 IRC Compliant Spacing for a Sawn Lumber Deck Ledger-to-Rim Board

Loading Condition	Nominal Ledger Size	Size (in.)	Model No.	Band Joist Material and Size	Maximum Deck Joist Span						
					Up to 6 ft.	Up to 8 ft.	Up to 10 ft.	Up to 12 ft.	Up to 14 ft.	Up to 16 ft.	Up to 18 ft.
					Maximum On-Center Spacing of Fasteners (in.)						
40 psf Live 10 psf Dead	2x	0.276 x 4	SDWS27400SS	1" OSB	13	10	8	6	6	5	4
				1" LVL							
				1⅛" OSB	18	14	11	9	8	7	6
				1 5/16" LVL							
				1¼" OSB							
				1½" LVL							
				1¼" LSL							
				1¾" LVL							
				2x SP, DFL, SPF, HF	18	14	11	9	8	7	6
60 psf Live 10 psf Dead	2x	0.276 x 4	SDWS27400SS	1" OSB	9	7	6	5	4	3	3
				1" LVL							
				1⅛" OSB	13	10	8	7	6	5	4
				1 5/16" LVL							
				1¼" OSB							
				1½" LVL							
				1¼" LSL							
				1¾" LVL							
				2x SP, DFL, SPF, HF	13	10	8	7	6	5	4
40 psf Live 10 psf Dead	(2) 2x	0.276 x 5	SDWS27500SS	1" OSB	15	12	9	8	7	6	5
				1" LVL							
				1⅛" OSB	15	12	9	8	7	6	5
				1 5/16" LVL							
				1¼" OSB							
				1½" LVL							
				1¼" LSL							
				1¾" LVL							
				2x SP, DFL, SPF, HF	15	12	9	8	7	6	5
60 psf Live 10 psf Dead	(2) 2x	0.276 x 5	SDWS27500SS	1" OSB	11	8	7	6	5	4	4
				1" LVL							
				1⅛" OSB	11	8	7	6	5	4	4
				1 5/16" LVL							
				1¼" OSB							
				1½" LVL							
				1¼" LSL							
				1¾" LVL							
				2x SP, DFL, SPF, HF	11	8	7	6	5	4	4

1. SDWS27SS screw spacing values are equivalent to 2015 IRC table R507.2. The table above also provides SDWS27SS screw spacing for a wider range of materials commonly used for rim board, and an alternate loading condition as required by some jurisdictions.
2. Solid-sawn rim board shall be Spruce-Pine-Fir, Hem-Fir, Douglas Fir-Larch, or Southern Pine species. Ledger shall be Hem-Fir, Douglas Fir-Larch, or Southern Pine species.
3. Fastener spacings are based on the lesser of single fastener ICCES AC233 testing of the Strong-Drive SDWS27SS screw with a safety factor of 5.0 or ICC-ES AC13 assembly testing with a factor of safety of 5.0. Spacing includes NDS wet service factor adjustment.
4. Rows of screws shall be vertically offset and evenly staggered. Screws shall be placed 1½" to 2" from the top and bottom of the ledger or rim board with 3" minimum and 6" maximum between rows and spaced per the table. End screws shall be located 6" from the end and at 1½" to 2" from the bottom of the ledger. For screws located at least 2" but less than 6" from the end, use 50% of the load per screw and 50% of the table spacing between the end screw and the adjacent screw, and for screws located between 2" and 4" from the end, predrill using a 3/16" drill.
5. Structural sheathing between the ledger and rim board shall be a maximum of ½" thick and fastened per code.

C-F-2019TECHSUP ©2019 SIMPSON STRONG-TIE COMPANY INC.

SIMPSON Strong-Tie®

Deck Applications

Strong-Drive® SDWH TIMBER-HEX Screw

For more information, see p. 55, C-F-2019 Fastening Systems Catalog

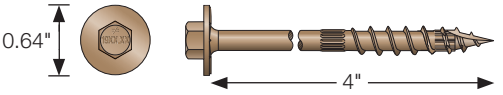

SDWH — 2015 and 2018 IRC Compliant Spacing for a Sawn Lumber Deck Ledger-to-Rim Board

Loading Condition	Nominal Ledger Size	Size (in.)	Model No.	Rim Board Material and Minimum Size	Maximum Deck Joist Span						
					Up to 6 ft.	Up to 8 ft.	Up to 10 ft.	Up to 12 ft.	Up to 14 ft.	Up to 16 ft.	Up to 18 ft.
					Maximum On-Center Spacing of Fasteners (in.)						
40 psf Live 10 psf Dead	2x	0.195 x 4	SDWH19400DB	1" OSB	13	9	8	6	5	5	4
				1" LVL							
				1⅛" OSB	18	13	11	9	8	7	6
				1 5/16" LVL							
				1¼" LSL							
				2x SP, DFL — 2x SPF, HF	15	12	9	8	7	6	5
60 psf Live 10 psf Dead	2x	0.195 x 4	SDWH19400DB	1" OSB	9	7	5	5	4	—	—
				1" LVL							
				1⅛" OSB	13	10	8	6	5	5	4
				1 5/16" LVL							
				1¼" LSL							
				2x SP, DFL — 2x SPF, HF	11	8	7	6	5	4	4

1. SDWH screw spacing values are equivalent to 2018 IRC Table R507.9.1.3(1) and 2015 IRC table R507.2. The table above also provides SDWH screw spacing for a wider range of materials commonly used for rim board, and an alternate loading condition as required by some jurisdictions.
2. Solid sawn rim board shall be Spruce-Pine-Fir, Hem-Fir, Douglas Fir–Larch, or Southern Pine species. Ledger shall be Hem-Fir, Douglas Fir–Larch, or Southern Pine species.
3. Fastener spacings are based on the lesser of single fastener ICC-ES AC233 testing of the Strong-Drive SDWH screw with a safety factor of 5.0 or ICC-ES AC13 assembly testing with a factor of safety of 5.0. Spacing includes NDS wet service factor adjustment.
4. Rows of screws shall be vertically offset and evenly staggered. Screws shall be placed 1½" to 2" from the top and bottom of the ledger or rim board with 3" minimum and 6" maximum between rows and spaced per the table. End screws shall be located 6" from the end and at 1½" to 2" from the bottom of the ledger. For screws located at least 2" but less than 6" from the end, use 50% of the load per screw and 50% of the table spacing between the end screw and the adjacent screw, and for screws located between 2" and 4" from the end, predrill using a 1.8" drill.
5. Structural sheathing between the ledger and rim board shall be a maximum of ½" thick and fastened per code.

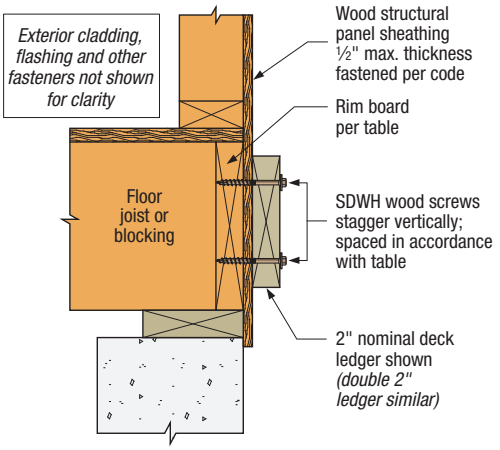

Ledger-to-Rim Board Assembly
(wood-framed lower floor acceptable, concrete wall shown for illustration purposes; other fasteners not shown for clarity)

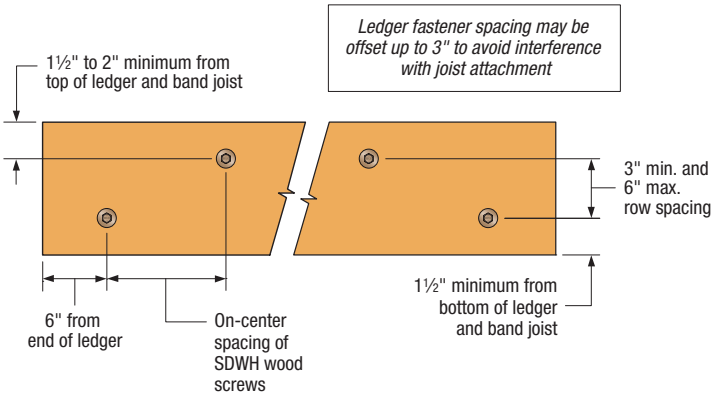

SDWH Timber-Hex Screw Spacing Detail

C-F-2019TECHSUP ©2019 SIMPSON STRONG-TIE COMPANY INC.

SIMPSON Strong-Tie®

Strong-Drive® SDWH TIMBER-HEX and SDWS TIMBER Screw

2015 and 2018 IRC Compliant Spacing and Allowable Shear Loads for Fastening a Sawn Lumber Deck Ledger-to-Rim Board with ½" Gap

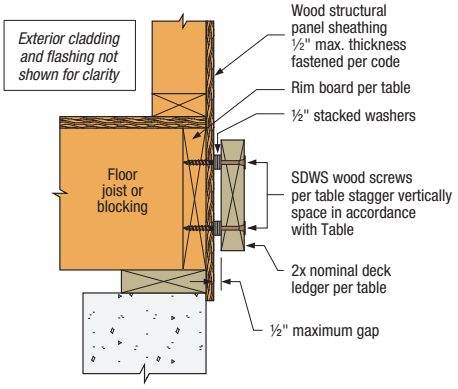

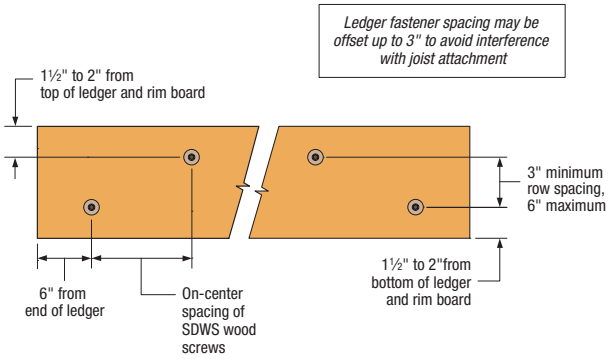

Table below lists the allowable shear loads for SDWS Timber screws and SDWH Timber-Hex screws when attaching a 2x ledger with up to ½" thickness of stacked washers to the listed rim board.

Single-Fastener Allowable Shear Loads for Fastening a Sawn Lumber Deck Ledger-to-Rim Board with ½" Gap

Nominal Ledger Size (in.)	Rim Board	Size (in.)	Model No.	Reference Allowable Load (lb.)
2x	2x SPF, DFL, SP #2	0.220 x 4	SDWS22400DB	270
		0.195 x 4	SDWH19400DB	260
	1⅛" LSL	0.220 x 4	SDWS22400DB	255
		0.195 x 4	SDWH19400DB	245
	1¾" LVL	0.220 x 4	SDWS22400DB	290
		0.195 x 4	SDWH19400DB	255

1. Sawn lumber 2x ledger shall have a minimum specific gravity of 0.42 (HF or SPF) and be grade No. 2 or better.
2. Rim board is to be dry lumber (specific gravity at least 0.42) or EWP rim board product (equivalent specific gravity of at least 0.42 for nails and screws installed in the face orientation).
3. Fastener spacings are based on the lesser of single fastener testing following ICC-ES AC233 or ledger assembly testing following ICC-ES AC13 using a safety factor of 5.0.
4. Screws shall be placed 1½" to 2" from the top and bottom of the ledger board or rim board, 6" from the end of the ledger with 3" minimum and 6" maximum between rows. Minimum on-center spacing is 4".
5. Wood structural panel sheathing between the ledger and rim board shall be a maximum of ½" thick and fastened per code.
6. Screws shall be tightened such that the washer stack is tightly compressed between the ledger and the rim board.
7. Maximum ½" gap created by stacked hot-dip galvanized or stainless-steel 5⁄16" Type A plain washers (N-narrow) with an outside diameter equal to 0.688" and inside diameter equal to 0.344".
8. Allowable loads are shown at the wood load duration factor of C_D = 1.0. Loads may be increased for load duration per the building code up to a C_D = 1.6. Tabulated values must be multiplied by all applicable adjustment factors per the NDS, including wet service factor.

C-F-2019TECHSUP © 2019 SIMPSON STRONG-TIE COMPANY INC.

SIMPSON Strong-Tie®

Deck Applications

Strong-Drive® SDWH TIMBER-HEX and SDWS TIMBER Screw (cont.)

2015 and 2018 IRC Compliant Spacing and Allowable Shear Loads for Fastening a Sawn Lumber Deck Ledger-to-Rim Board with ½" Gap

Strong-Drive® SDWS Timber screws and SDWH Timber-Hex screws are suitable for installing ledgers with up to ½" drainage gap between the ledger and the rim board. These fasteners do not require predrilling and have a double-barrier coating providing corrosion resistance equivalent to hot-dip galvanization. The gap is formed by stacking hot-dip galvanized or stainless-steel 5⁄16" Type A plain washers (0.688" outside diameter, 0.344" inside diameter) on the shank of the screws between the ledger and the rim board. Weather proofing shall be the responsibility of the installer. The table below lists the maximum on-center spacing of SDWS Timber screws and SDWH Timber-Hex screws when attaching a 2x ledger to the listed rim board of various widths with a maximum ½" gap between them.

Loading Condition: 40 PSF Live Load and 10 PSF Dead Load

Ledger Nominal Size (in.)	Rim Board Material (in.)	Size (in.)	Model No.	Maximum Deck Joist Span						
				Up to 6 ft.	Up to 8 ft.	Up to 10 ft.	Up to 12 ft.	Up to 14 ft.	Up to 16 ft.	Up to 18 ft.
				Maximum On-Center Spacing of Fasteners (in.)						
2x	2x DFL, SP, SPF #2	0.220 x 4	SDWS22400DB	15	11	9	7	6	5	5
		0.195 x 4	SDWH19400DB	14	11	8	7	6	5	4
	1.125" LSL	0.220 x 4	SDWS22400DB	14	10	8	7	6	5	4
		0.195 x 4	SDWH19400DB	13	10	8	6	5	5	4
	1.75" LVL	0.220 x 4	SDWS22400DB	16	12	9	8	7	6	5
		0.195 x 4	SDWH19400DB	14	10	8	7	6	5	4

1. Sawn lumber ledger shall have minimum specific gravity of 0.42 (HF or SPF) and shall be grade No. 2 or better. Rim board is to be dry lumber (specific gravity at least 0.42) or EWP rim board product (equivalent specific gravity of at least 0.42 for nails and screws installed in the face orientation).
2. Fastener spacings are based on the lesser of single fastener testing following ICC-ES AC233 or ledger assembly testing following ICC-ES AC13 using a safety factor of 5.0. Spacing includes NDS wet service factor adjustment.
3. Screws shall be placed 1½" to 2" from the top and bottom of the ledger board or rim board, 6" from the end of the ledger with 3" minimum and 6" maximum between rows. End screws shall be located near the bottom of the ledger. See figure on the following page.
4. Wood structural panel sheathing between the ledger and rim board shall be a maximum of ½" thick and fastened per code.
5. Screws shall be tightened such that the washer stacks are tightly compressed between the ledger and the rim board.
6. Maximum ½" gap formed by stacked hot-dip galvanized or stainless-steel 5⁄16" Type A plain washers (N-narrow) with a nominal outside diameter of 0.688" and inside diameter of 0.344".
7. The fastener specifications in this table meet the prescriptive deck ledger attachment solutions and loading requirements per 2018 IRC Table R507.9.1.3(1) and Table R507.2 of the 2012 and 2015 IRC.

C-F-2019TECHSUP ©2019 SIMPSON STRONG-TIE COMPANY INC.

Strong-Drive® SDWH TIMBER-HEX HDG Screw

Deck Ledger-to-Rim Board Applications

The Strong-Drive SDWH Timber-Hex HDG (SDWH27G) screws have been tested for use in attaching a deck ledger to a rim board, through a maximum ½" thickness of wood structural panel sheathing. The table below is based on the lesser of single fastener ICC-ES AC233 testing of the fastener or ICC-ES AC13 ledger assembly testing with an applied factor of safety of 5.0. Values include adjustment for wet service. Maximum fastener on-center spacing is listed for the standard International Residential Code loading case (40 psf Live + 10 psf Dead) and an alternate case (60 psf Live + 10 psf Dead).

For more information, see p. 56, C-F-2019 Fastening Systems Catalog

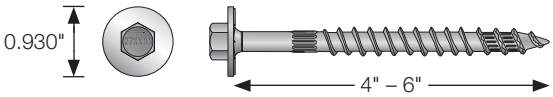

SDWH Timber-Hex HDG Screw – 2015 and 2018 IRC Compliant Spacing for a Sawn Lumber Deck Ledger-to-Rim Board

Loading Condition	Nominal Ledger Size (in.)	Size (in.)	Model No.	Rim Board Material and Minimum Size	Maximum Deck Joist Span						
					Up to 6 ft.	Up to 8 ft.	Up to 10 ft.	Up to 12 ft.	Up to 14 ft.	Up to 16 ft.	Up to 18 ft.
					Maximum On-Center Spacing of Fasteners (in.)						
40 psf Live 10 psf Dead	2x	0.276 x 4	SDWH27400G	1" OSB 1" LVL 1⅛" OSB 1 5/16" LVL 1¼" LSL 2x SP, DFL – 2x SPF, HF	22	17	13	11	10	8	7
60 psf Live 10 psf Dead	2x	0.276 x 4	SDWH27400G	1" OSB 1" LVL 1⅛" OSB 1 5/16" LVL 1¼" LSL 2x SP, DFL – 2x SPF, HF	16	12	10	8	7	6	5
40 psf Live 10 psf Dead	(2) 2x	0.276 x 6	SDWH27600G	1" OSB 1" LVL 1⅛" OSB 1 5/16" LVL 1¼" LSL 2x SP, DFL – 2x SPF, HF	25	19	15	13	11	9	8
60 psf Live 10 psf Dead	(2) 2x	0.276 x 6	SDWH27600G	1" OSB 1" LVL 1⅛" OSB 1 5/16" LVL 1¼" LSL 2x SP, DFL – 2x SPF, HF	18	14	11	9	8	7	6

1. SDWH27G screw spacing values are equivalent to 2015 IRC Table R507.2. The table above also provides SDWH27G screw spacing for a wide range of materials commonly used for rim board, and an alternate loading condition as required by some jurisdictions.
2. Sawn lumber rim board shall be Spruce-Pine-Fir, Hem-Fir, Douglas Fir-Larch, or Southern Pine species. Ledger shall be Hem-Fir, Douglas Fir-Larch, or Southern Pine species.
3. Fastener spacings are based on the lesser of single fastener ICC-ES AC233 testing of the Strong-Drive SDWH27G screw with a safety factor of 5.0 or ICC-ES AC13 assembly testing with a factor of safety of 5.0. Spacing includes NDS wet service factor adjustment.
4. Multiple ledger plies shall be fastened together per code independent of the SDWH27G screws.
5. Rows of screws shall be vertically offset and evenly staggered. Screws shall be placed 1½" to 2" from the top and bottom of the ledger or rim board with 3" minimum and 6" maximum between rows and spaced per the table. End screws shall be located 6" from the end and at 1½" to 2" from the bottom of the ledger. For screws located at least 2" but less than 6" from the end, use 50% of the load per screw and 50% of the table spacing between the end screw and the adjacent screw, and for screws located between 2" and 4" from the end, predrill using a 3/16" drill bit.
6. Structural sheathing between the ledger and rim board shall be a maximum of ½" thick and fastened per code.

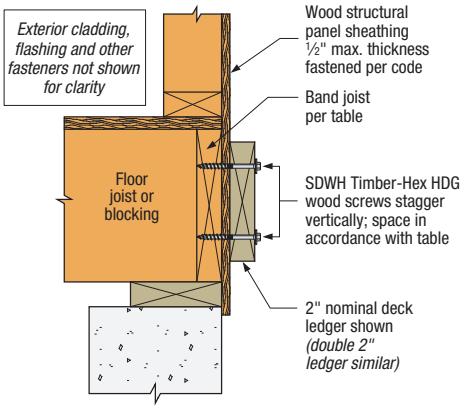

Ledger-to-Rim Board Assembly
(wood-framed lower floor acceptable, concrete wall shown for illustration purposes; other fasteners not shown for clarity.)

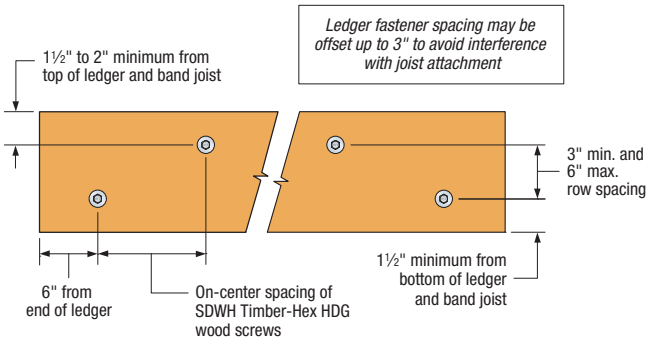

SDWH Timber-Hex HDG Screw Spacing Detail for Ledgers

C-F-2019TECHSUP ©2019 SIMPSON STRONG-TIE COMPANY INC.

SIMPSON Strong-Tie®

Deck Applications

Strong-Drive® SDWH TIMBER-HEX SS Screw

For more information, see p. 56, C-F-2019 Fastening Systems Catalog

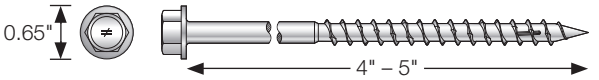

SDWH SS — 2015 and 2018 IRC Compliant Spacing for a Sawn Lumber Deck Ledger-to-Rim Board — 0.276" Screws

Loading Condition	Nominal Ledger Thickness (in.)	Size (in.)	Model No.	Rim Board Material and Size	Max Deck Joist Span						
					Up to 6 ft.	Up to 8 ft.	Up to 10 ft.	Up to 12 ft.	Up to 14 ft.	Up to 16 ft.	Up to 18 ft.
					Max On-Center Spacing of Fasteners (in.)						
40 psf Live 10 psf Dead	2x	0.276 x 4	SDWH27400SS	1" OSB	19	14	11	9	8	7	6
				1" LVL							
				1⅛" OSB	19	14	11	9	8	7	6
				1 5/16" LVL							
				1¼" OSB							
				1½" LVL							
				1¼" LSL							
				1¾" LVL							
				2x SP, DFL, SPF, HF	19	14	11	9	8	7	6
60 psf Live 10 psf Dead	2x	0.276 x 4	SDWH27400SS	1" OSB	13	10	8	7	6	5	4
				1" LVL							
				1⅛" OSB	13	10	8	7	6	5	4
				1 5/16" LVL							
				1¼" OSB							
				1½" LVL							
				1¼" LSL							
				1¾" LVL							
				2x SP, DFL, SPF, HF	13	10	8	7	6	5	4
40 psf Live 10 psf Dead	(2) 2x	0.276 x 5	SDWH27500SS	1" OSB	19	14	11	9	8	7	6
				1" LVL							
				1⅛" OSB	19	14	11	9	8	7	6
				1 5/16" LVL							
				1¼" OSB							
				1½" LVL							
				1¼" LSL							
				1¾" LVL							
				2x SP, DFL, SPF, HF	19	14	11	9	8	7	6
60 psf Live 10 psf Dead	(2) 2x	0.276 x 5	SDWH27500SS	1" OSB	13	10	8	7	6	5	4
				1" LVL							
				1⅛" OSB	13	10	8	7	6	5	4
				1 5/16" LVL							
				1¼" OSB							
				1½" LVL							
				1¼" LSL							
				1¾" LVL							
				2x SP, DFL, SPF, HF	13	10	8	7	6	5	4

See footnotes on next page.

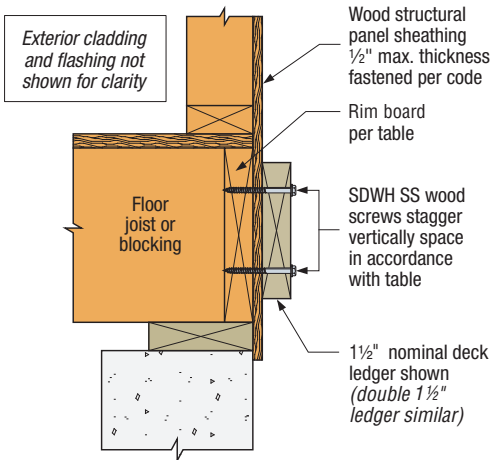

Ledger-to-Rim Board Assembly
(wood-framed lower floor acceptable; concrete wall shown for illustration purposes)

C-F-2019TECHSUP ©2019 SIMPSON STRONG-TIE COMPANY INC.

SIMPSON Strong-Tie®

Strong-Drive® SDWH TIMBER-HEX SS Screw (cont.)

SDWH SS — 2015 and 2018 IRC Compliant Spacing for a Sawn Lumber Deck Ledger-to-Rim Board — 0.188" Screws

Loading Condition	Nominal Ledger Thickness (in.)	Size (in.)	Model No.	Rim Board Material and Size	Maximum Deck Joist Span						
					Up to 6 ft.	Up to 8 ft.	Up to 10 ft.	Up to 12 ft.	Up to 14 ft.	Up to 16 ft.	Up to 18 ft.
					Maximum On-Center Spacing of Fasteners (in.)						
40 psf Live 10 psf Dead	2x	0.188 x 4	SDWH19400SS	1" OSB	14	11	8	7	6	5	5
				1" LVL							
				1⅛" OSB	14	11	8	7	6	5	5
				1 5/16" LVL							
				1¼" OSB							
				1½" LVL							
				1¼" LSL							
				1¾" LVL							
				2x SP, DFL, SPF, HF	14	11	8	7	6	5	5
60 psf Live 10 psf Dead	2x	0.188 x 4	SDWH19400SS	1" OSB	10	8	6	5	4	4	3
				1" LVL							
				1⅛" OSB	10	8	6	5	4	4	3
				1 5/16" LVL							
				1¼" OSB							
				1½" LVL							
				1¼" LSL							
				1¾" LVL							
				2x SP, DFL, SPF, HF	10	8	6	5	4	4	3
40 psf Live 10 psf Dead	(2) 2x	0.188 x 5	SDWH19500SS	1" OSB	14	11	8	7	5	5	5
				1" LVL							
				1⅛" OSB	14	11	8	7	5	5	5
				1 5/16" LVL							
				1¼" OSB							
				1½" LVL							
				1¼" LSL							
				1¾" LVL							
				2x SP, DFL, SPF, HF	14	11	8	7	5	5	5
60 psf Live 10 psf Dead	(2) 2x	0.188 x 5	SDWH19500SS	1" OSB	10	8	6	5	4	4	3
				1" LVL							
				1⅛" OSB	10	8	6	5	4	4	3
				1 5/16" LVL							
				1¼" OSB							
				1½" LVL							
				1¼" LSL							
				1¾" LVL							
				2x SP, DFL, SPF, HF	10	8	6	5	4	4	3

1. Screw spacing values are equivalent to 2018 IRC Table R507.9.1.3(1) and 2015 IRC Table R507.2. The table above also provides screw spacing for a wider range of materials commonly used for band joists, and an alternate loading condition as required by some jurisdictions.
2. Sawn rim board shall be spruce-pine-fir, hem-fir, Douglas fir–larch, or southern pine species. Ledger shall be hem-fir, Douglas fir–larch, or southern pine species.
3. Fastener spacings are based on the lesser of single fastener ICC-ES AC233 testing with a safety factor of 5.0 or ledger assembly testing with a factor of safety of 5.0. Spacing includes NDS wet service factor adjustment.
4. Multiple ledger plies shall be fastened together per code independent of the screws.
5. Rows of screws shall be vertically offset and evenly staggered. Screws shall be placed 1½" to 2" from the top and bottom of the ledger or rim board with 3" minimum and 6" maximum between rows and spaced per the table. End screws shall be located 6" from the end and at 1½" to 2" from the bottom of the ledger. For screws located at least 2" but less than 6" from the end, use 50% of the load per screw and 50% of the table spacing between the end screw and the adjacent screw, and for screws located between 2" and 4" from the end, predrill using a 5/32" drill for SDWH19 SS and 7/32" drill for SDWH27 SS.
6. Structural sheathing between the ledger and band shall be a maximum of ½" thick and fastened per code.
7. See figure on previous page.

C-F-2019TECHSUP ©2019 SIMPSON STRONG-TIE COMPANY INC.

SIMPSON Strong-Tie®

Strong-Drive® SDS HEAVY-DUTY CONNECTOR Screw

For more information, see p. 60, C-F-2019 Fastening Systems Catalog

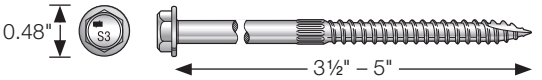

2015 and 2018 IRC Compliant Spacing for a Sawn Lumber Deck Ledger-to-Rim Board

Loading Condition	Ledger Nominal Size (in.)	SDS Screw Length (in.)	Rim Board Material and Size	Maximum Deck Joist Span						
				Up to 6 ft.	Up to 8 ft.	Up to 10 ft.	Up to 12 ft.	Up to 14 ft.	Up to 16 ft.	Up to 18 ft.
				Maximum On-Center Spacing of Fasteners (in.)						
40 psf Live 10 psf Dead	2x	3½	2" nominal sawn lumber	13	10	8	6	5	5	4
	(2) 2x[3]	5								
	2x	3½	1" min. oriented strand board (OSB) rim board	12	9	7	6	5	4	4
	2x	3½	1⅛" min. oriented strand board (OSB) rim board or 1¼" min. structural composite lumber	15	11	9	7	6	5	5
60 psf Live 10 psf Dead	2x	3½	2" nominal sawn lumber	9	7	5	4	4	3	3
	(2) 2x[3]	5								
	2x	3½	1" min. oriented strand board (OSB) rim board	8	6	5	4	3	3	2
	2x	3½	1⅛" min. oriented strand board (OSB) rim board or 1¼" min. structural composite lumber	10	8	6	5	4	4	3

1. Solid-sawn rim board shall be spruce-pine-fir, hem-fir, Douglas fir–larch, or southern pine species. Ledger shall be hem-fir, Douglas fir–larch, or southern pine species.
2. Fastener spacings are based on single fastener testing of the Strong-Drive SDS screw with a safety factor of 5.0 and include NDS wet service adjustment factor.
3. Multiple ledger plies shall be fastened together per code independent of the SDS screws.
4. SDS screw spacing values (above) are equivalent to 2018 IRC Table R507.9.1.3(1) and 2015 IRC Table R507.2, based on testing of the Strong-Drive SDS screw with a factor of safety of 5.0. The table above also provides SDS screw spacing for a wider range of materials commonly used for rim board, and an alternate loading condition as required by some jurisdictions.
5. Screw models SDS25312, SDS25312SS and SDS25500.

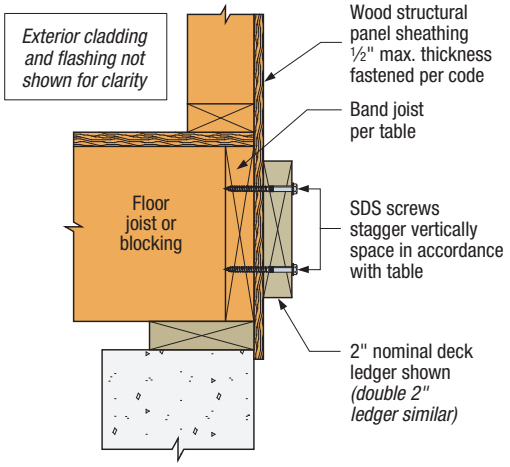

Ledger-to-Rim Board Assembly
(wood-framed lower floor acceptable, concrete wall shown for illustration purposes; other fasteners not shown for clarity.)

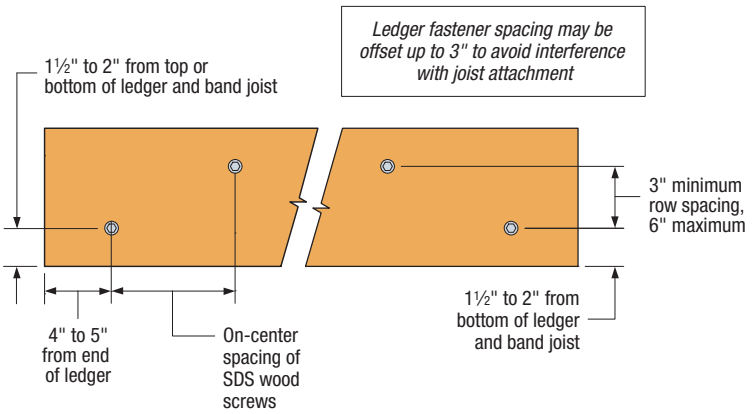

SDS Screw Spacing Detail for Ledgers

C-F-2019TECHSUP ©2019 SIMPSON STRONG-TIE COMPANY INC.

Strong-Drive® SDWS TIMBER Screw for Guard Post Installations

For more information, see p. 52, C-F-2019 Fastening Systems Catalog

Framed guard post installations fastened with SDWS Timber screws were tested in accordance with ICC-ES AC273 and met the 600 lb. concentrated ultimate load applied at the top of a single post in an outward direction and the post deflection limit at the 200 lb. design level. For a required uniform load of 150 plf in AC273 for guard and handrail systems, the screw was not tested as excepted for one- and two-family dwellings in IBC 2015 Section 1607.8.1. The following details were tested:

- Detail A: Interior Post on Rim Board
- Detail B: Interior Post at Corner
- Detail C: Interior Post on Rim Joist with Adjacent Joist
- Detail D: Interior Post on Rim Joist between Joists

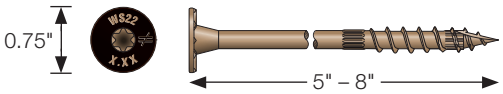

The SDWS Timber screws are the subject of IAPMO-UES ER-192. The following table lists the SDWS Timber screw information and total quantity of fasteners required for each guard post detail. The guard post details are shown on pp. 116–118.

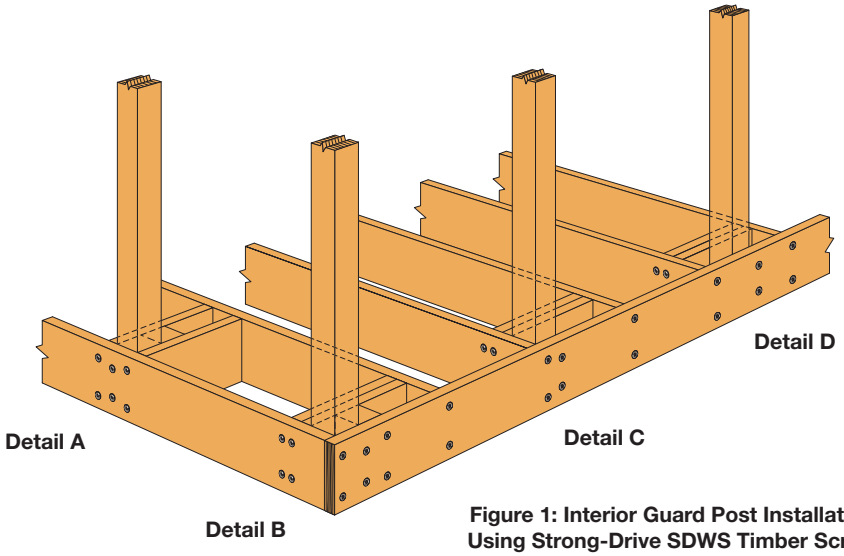

Figure 1: Interior Guard Post Installations Using Strong-Drive SDWS Timber Screws

Code-Compliant Guard Post Connection Details

Installation Scope:

For 36” Guard Post Height
(above deck surface, refer to T-F-GRDPSTRL)

- Use Nominal 4” x 4” guard post
- Use Nominal 2” x 8” rim board/rim joist, 2x blocking and 4x blocking
- Framing lumber should be HF, DFL or SP, pressure treated with chemical retention not greater than UC4A
- Full-depth blocking required
- Interior post installation (post positioned inside the rim board, rim joist)
- Fastener position tolerance: ± 1⁄16”

For 42” Guard Post Height
(above deck surface, refer to L-F-SDWS42GRD)

- Use Nominal 4” x 4” guard post
- Use Nominal 2” x 8” rim board/rim joist, 2x blocking and 4x blocking
- Framing lumber should be DFL (No. 2 grade, minimum) or SP (Construction grade, minimum), pressure treated with chemical retention not greater than UC4A
- Full-depth blocking required
- Interior post installation (post positioned inside the rim board, rim joist)
- Fastener position tolerance: ± 1⁄16”

C-F-2019TECHSUP ©2019 SIMPSON STRONG-TIE COMPANY INC.

Strong-Drive® SDWS TIMBER Screw for Guard Post Installations (cont.)

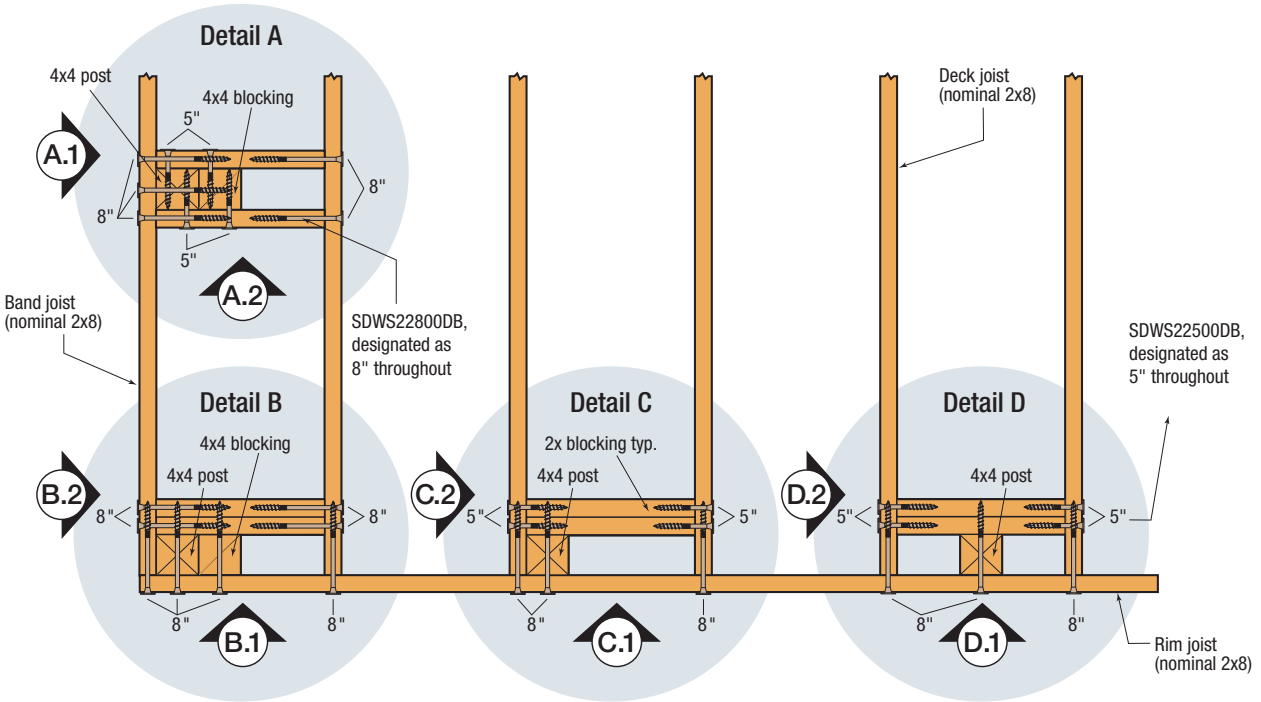

Plan View Showing Details of Four Guard Post Connections Using Strong-Drive SDWS Timber Screws

SDWS22DB Screw Information for Guard Post Details

Detail	Size (in.)	Model No.	Quantity Required
A	0.220 x 5	SDWS22500DB	4
	0.220 x 8	SDWS22800DB	10
B	0.220 x 8	SDWS22800DB	16
C	0.220 x 5	SDWS22500DB	8
	0.220 x 8	SDWS22800DB	6
D	0.220 x 5	SDWS22500DB	8
	0.220 x 8	SDWS22800DB	6

1. SDWS Timber screws install best with a low-speed ½" drill and a T-40 6-lobe bit. The matched bit included with the screws is recommended for best results.
2. Predrilling is typically not required. Where predrilling is necessary, use a 5/32" drill bit for Strong-Drive SDWS Timber screws.
3. Screw heads that are countersunk flush to the wood surface are acceptable if the screw has not spun out.
4. Deck joists shall be fastened to rim joist and ledger as required by the code. See p. 118 for rim joist connection.

C-F-2019TECHSUP ©2019 SIMPSON STRONG-TIE COMPANY INC.

Strong-Drive®
SDWS **TIMBER** Screw for Guard Post Installations (cont.)

Detail A — Interior Post on Rim Board

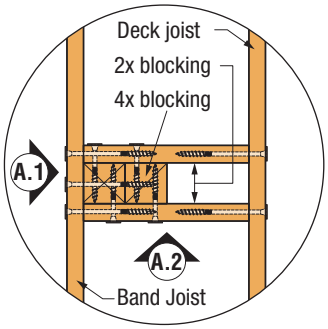

Detail A Plan View

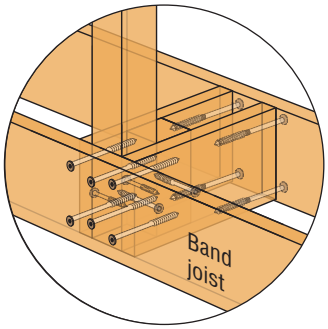

Detail A Isometric View

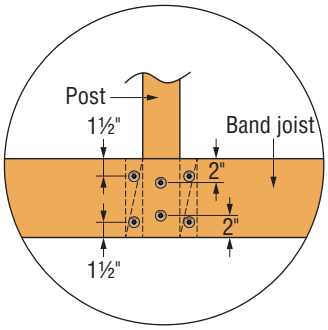

Detail A.1 Front Elevation

1. Rim board to 2x blocking 1½" from top and bottom edges using 8" SDWS22800DB.
2. Rim board to post and 4x blocking 2" from top and bottom edges using 8" SDWS22800DB.

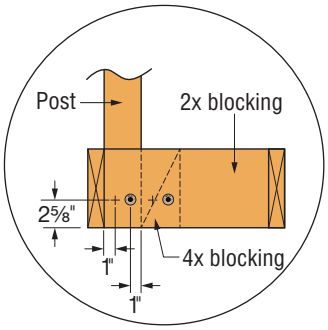

Detail A.2 Side Elevation

1. 2x blocking to post — opposing screws 1" from outer edges of post, 2⅝" from bottom edge of 2x blocking using 5" SDWS22500DB.
2. 2x blocking to 4x blocking — opposing screws 1" from outer edges of 4x blocking, 2⅝" from bottom edge of 2x blocking using 5" SDWS22500DB.

Detail B — Interior Post on Corner

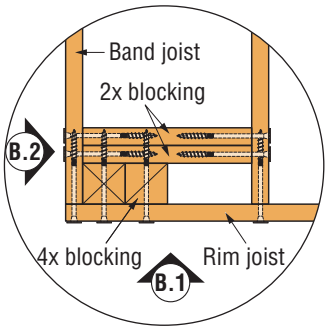

Detail B Plan View

Note: For fastening rim joist to rim board and deck joists, predrilling for the SDWS22800DB screws is recommended using a 5/32" drill bit.

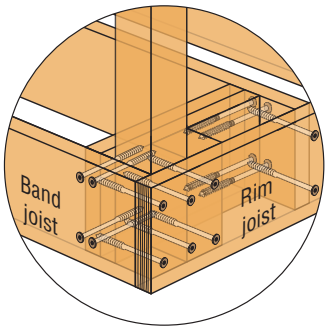

Detail B Isometric View

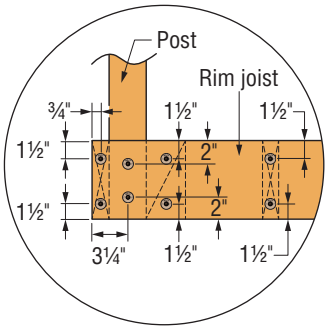

Detail B.1 Front Elevation

1. Rim joist to rim board or deck joists 1½" from top and bottom edges, ¾" from side edge using 8" SDWS22800DB.
2. Rim joist to post and 2x blocking 2" from top and bottom edges, centered on post using 8" SDWS22800DB.
3. Rim joist to 4x blocking and 2x blocking 1½" from top and bottom edges centered on 4x blocking using 8" SDWS22800DB.

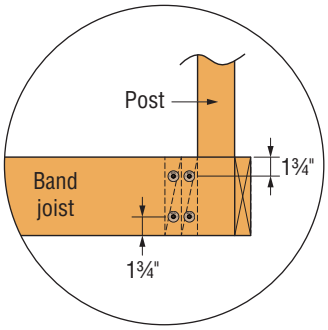

Detail B.2 Side Elevation

1. Rim board to 2x blocking 1¾" from top and bottom edges using 8" SDWS22800DB.

C-F-2019TECHSUP ©2019 SIMPSON STRONG-TIE COMPANY INC.

Strong-Drive® SDWS **TIMBER** Screw for Guard Post Installations (cont.)

Detail C — Interior Post on Rim Joist with Adjacent Joist

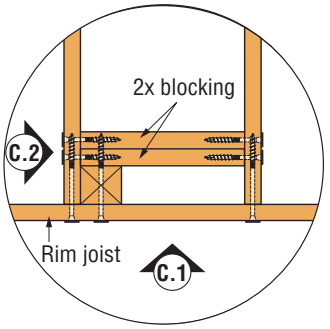

Detail C Plan View

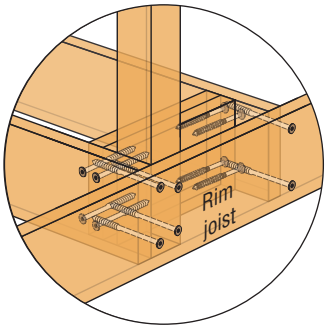

Detail C Isometric View

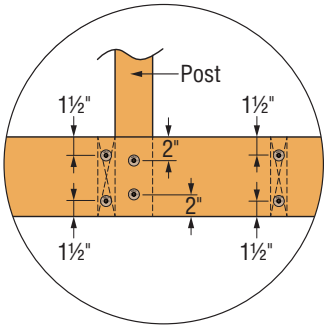

1. Rim joist to deck joist 1½" from top and bottom edges using 8" SDWS22800DB.
2. Rim joist to post and 2x blocking 2" from top and bottom edges using 8" SDWS22800DB.

Detail C.1 Front Elevation

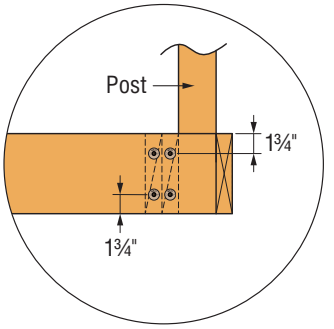

1. Deck joist to 2x blocking 1¾" from top and bottom edges using 5" SDWS22500DB.

Detail C.2 Side Elevation

Detail D — Interior Post on Rim Joist Between Joists

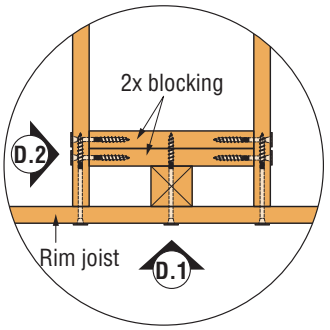

Detail D Plan View

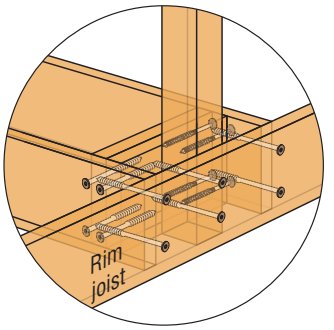

Detail D Isometric View

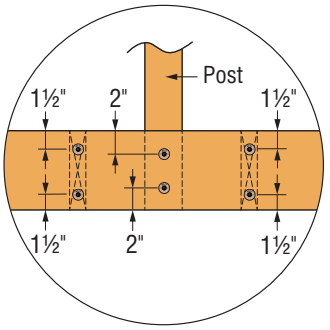

1. Rim joist to deck joists 1½" from top and bottom edges using 8" SDWS22800DB.
2. Rim joist to post and 2x blocking 2" from top and bottom edges using 8" SDWS22800DB.

Detail D.1 Front Elevation

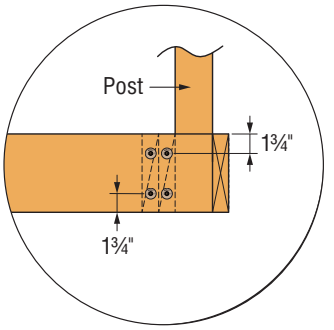

1. Deck joist to 2x blocking 1¾" from top and bottom edges using 5" SDWS22500DB.

Detail D.2 Side Elevation

C-F-2019TECHSUP ©2019 SIMPSON STRONG-TIE COMPANY INC.

Strong-Drive® SDWS FRAMING Screw for Guard Rail Installations

For more information, see p. 52, C-F-2019 Fastening Systems Catalog

The Simpson Strong-Tie® Strong-Drive SDWS Framing screws (SDWS16300) were evaluated for use as fasteners in the guard rail-to-post connection. SDWS Framing screws are evaluated for structural and corrosion resistance in IAPMO UES ER-192. Testing and evaluation for guard rail connections followed the sections 4.6 and 4.7 of ICC-ES AC273, Acceptance Criteria for Handrails and Guards. Details of the connection shown in figures on the following pages meet or exceed horizontal and vertical concentrated load of the 600 lb. required for wood guard rails attached to wood supporting structure with a maximum guard post spacing of 6'.

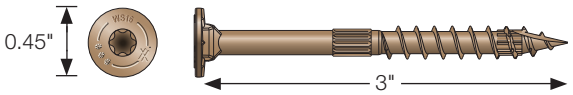

Strong-Drive SDWS FRAMING Screw
(SDWS16300)

These details are applicable to systems where the guard post has a minimum specific gravity of 0.42 (Hem-Fir), and the guard rail has a minimum specific gravity of 0.36 (Western Cedar). The guard rail must be fastened on the guard post from flush with the outer edge of the guard post to the center of the guard post surface, and may be used as the top rail, as shown the figure below, and the bottom rail of the guard assembly. The SDWS Framing screws shall be installed from the exterior side of the rail. Predrilling using a ⅛" diameter drill bit may be required to prevent rail splitting. Install screws at a 30° angle into the post, making sure screws seat/finish 1" from where the rails join the post. A cap rail was not included in the testing, and if installed, a cap rail would further enhance the performance of the guard system.

Code-Compliant Handrail Connection Details

Installation Scope:

- Maximum guard post spacing of 6'
- Nominal 2x4 top and bottom guard rail (AWC, DCA6)
- Nominal 4x4 guard post, min. specific gravity 0.42; min. guard rail specific gravity 0.36

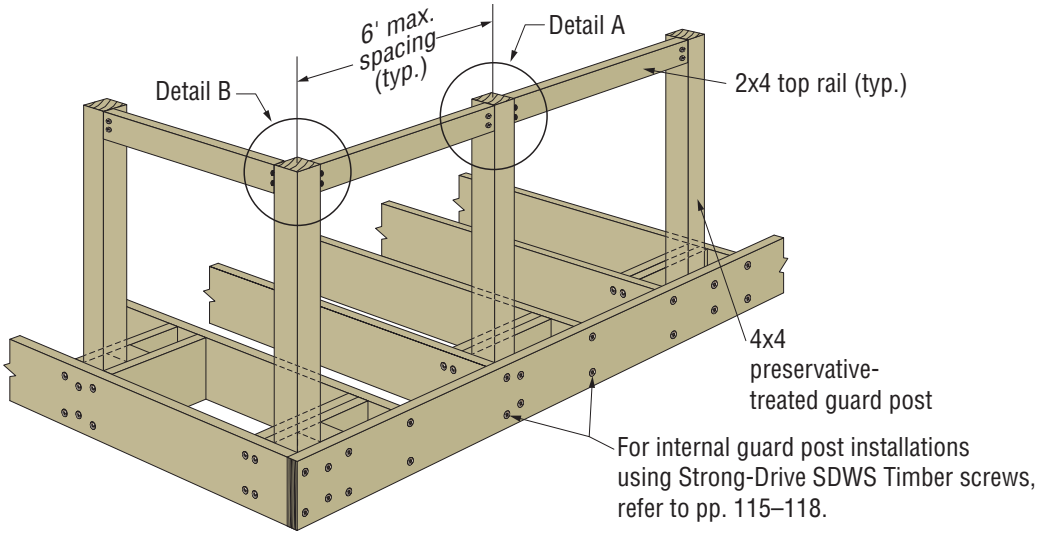

Detail	Size (in.)	Model No.	Quantity Required
A	0.160 x 3	SDWS16300	2
B			

C-F-2019TECHSUP ©2019 SIMPSON STRONG-TIE COMPANY INC.

Strong-Drive® SDWS FRAMING Screw for Guard Rail Installations (cont.)

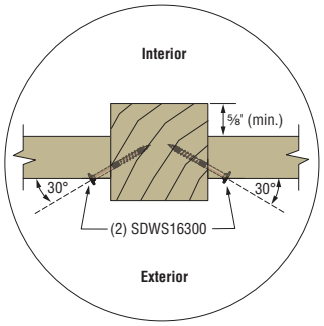

Detail A: Plan View

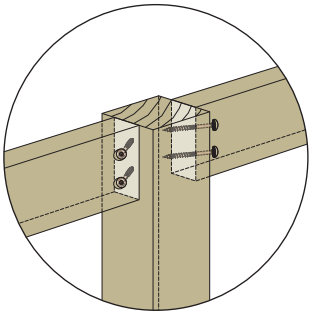

Detail A: Rail-to-Post Perspective View

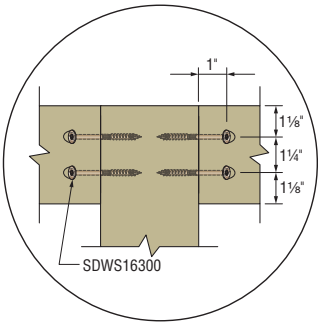

Detail A: Elevation View

1. 4x4 post opposing screws, 1⅛" from top and bottom edges using 3" SDWS16300.
2. Install 1" from where guard rails join guard post at 30° angle.

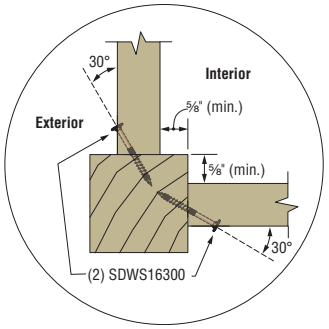

Detail B: Plan View

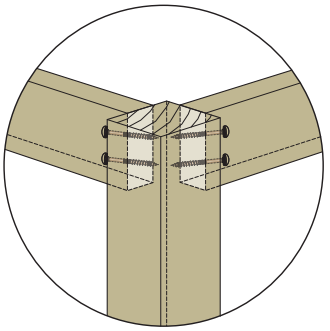

Detail B: Perspective View

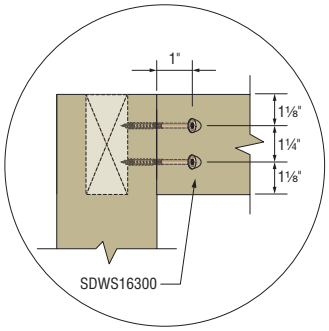

Detail B: Elevation View (Front)

1. Fasten guard rail to guard post 1⅛" from top and bottom edges using 3" SDWS16300.
2. Install 1" from where guard rails join guard post at 30° angle into post.

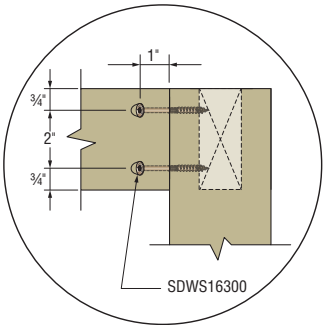

Detail B: Elevation View (Side)

1. Fasten guard rail to guard post ¾" from top and bottom edge using 3" SDWS16300.
2. Install 1" from where guard rails join guard post at 30° angle into post.

C-F-2019TECHSUP ©2019 SIMPSON STRONG-TIE COMPANY INC.

Fasteners for Wood Balluster Installations

The Simpson Strong-Tie® Strong-Drive® SDWS Framing screws (SDWS16212), Deck-Drive™ DSV Wood screw (DSVT212) and Deck-Drive DWP Wood SS screw (S08250WP, T08250WP) were evaluated for use as fasteners in the wood baluster-to-top and bottom rail connections.

The proposed fasteners — SDWS16212, DSVT212, S08250DWP and T08250WP — can be used to fasten wooden balusters to wooden rails using one screw in each end of the baluster. For a nominal 2x2 baluster, the screws can be located on center of the baluster width, not closer than ⅞" to the baluster end, and not closer than ⅜" to the edge of the rail. Predrilling may be required to prevent baluster splitting.

Evaluation for the wood baluster connections utilized the geometry of ASTM E935-Standard Test Methods for Performance of Permanent Metal Railing Systems and Rails for Buildings as prescribed by ICC-ES AC273. Details of the connection shown in figures on the following pages meet or exceed the load of 150 lb. applied to a one square foot area normal to the infill, as required for wood balusters with a maximum spacing of 4" (per DCA6 requirement). To maximize the connection load, it is assumed that 150 lb. is applied to two balusters at one end of the baluster pair, producing a maximum withdrawal force of 62 lb.

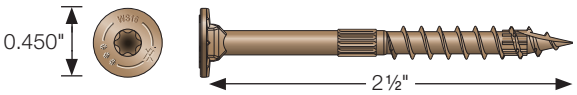

Strong-Drive SDWS FRAMING Screw
(see p. 52, C-F-2019)

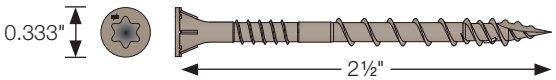

Deck-Drive DSV WOOD Screw
(see p. 65, C-F-2019)

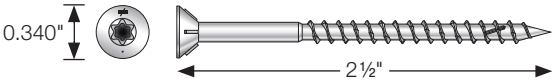

Deck-Drive DWP WOOD SS Screw
(see pp. 62–64, C-F-2019)

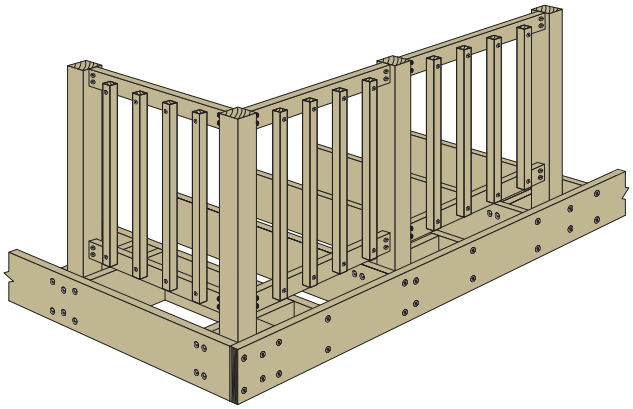

Overall Perspective View of Deck with Balusters

Code-Compliant Baluster Connection Details

Installation Scope:

- Maximum space between adjacent balusters is 4" (AWC, DCA6).
- Baluster is nominal 2x2 (1.5" x 1.5" actual, per AWC, DCA6).
- Each of the screws has 1" of thread length embedment in the main member based on nominal baluster thickness of 1.5".
- Baluster and guard rail min. specific gravity of 0.36.

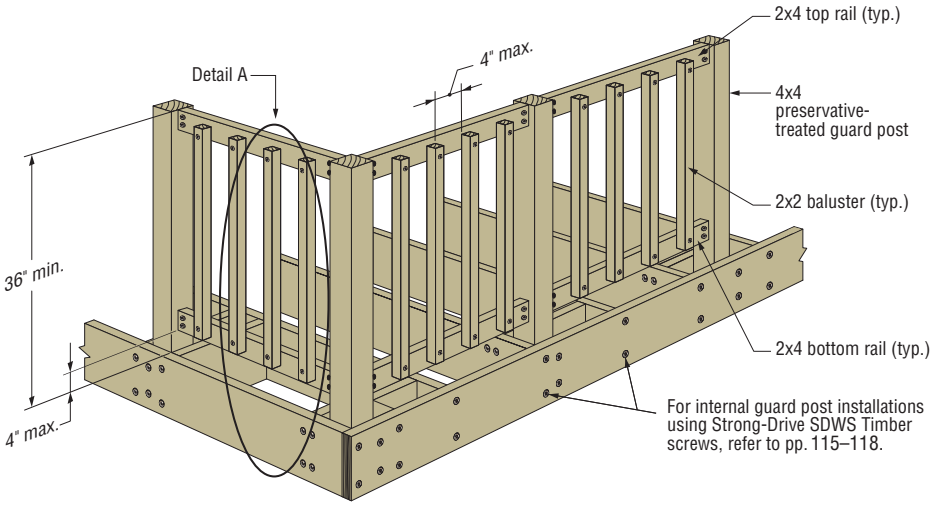

Overall Perspective View of Deck with Baluster Detail

C-F-2019TECHSUP ©2019 SIMPSON STRONG-TIE COMPANY INC.

Fasteners for Wood Balluster Installations (cont.)

The following table indicates the number of screws required to meet the installation requirements of the baluster detail.

Fastener Option	Detail	Model No.	Quantity Required per Baluster	Length (in.)	Head Diameter (in.)
1	A	SDWS16212	2	2½	0.450
2		DSVT212			0.333
3		S08250WP			0.340
4		T0825WP			0.334

The results of the withdrawal analysis show that the DSVT212, SDWS16212 and S08250WP have allowable withdrawal and pull-through resistances that meet or exceed the maximum load on the baluster-to-rail connection.

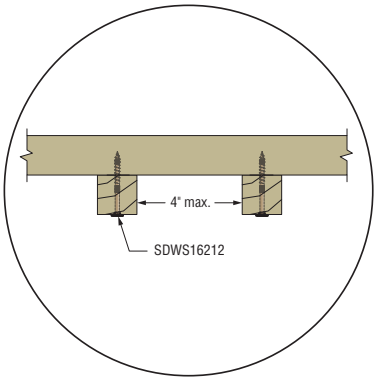

Detail A: Baluster Plan View
(SDWS16212 listed, DSVT212, S08250WP similar)

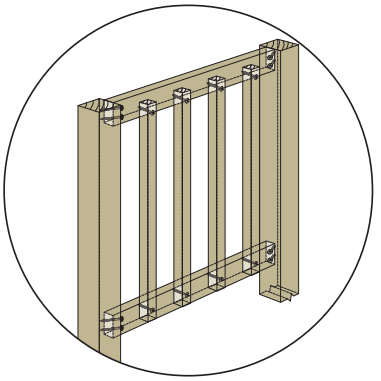

Detail A: Baluster Perspective View

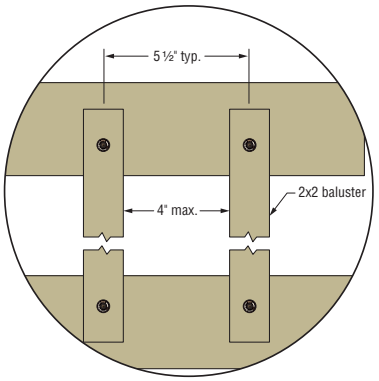

1. Space balusters maximum 4" apart edge-to-edge.

Detail A: Baluster Elevation View (Front)

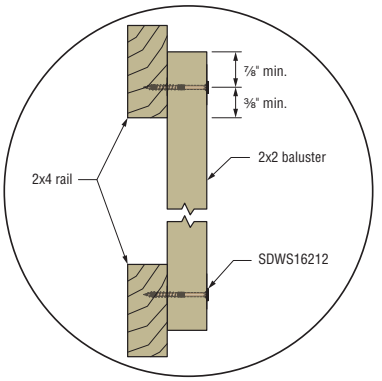

1. Fasten screws into 2x2 baluster, on center, 7/8" from each end of baluster into 2x4 top and bottom rails with SDWS16212 screws.

Detail A: Baluster Elevation View (Side)
(SDWS16212 listed, DSVT212, S08250WP similar)

C-F-2019TECHSUP ©2019 SIMPSON STRONG-TIE COMPANY INC.

SIMPSON Strong-Tie®

Strong-Drive® SDWH TIMBER-HEX HDG Screw Beam-to-Top-of-Post Connection

The Simpson Strong-Tie® Strong-Drive SDWH TIMBER-HEX HDG (SDWH27G) structural wood screws may be used to attach a 6x or 8x beam to the top of a post. The screws are available with a hot-dip galvanized coating in accordance with ASTM A153, Class C, suitable for severe exposure applications including preservative treated woods in general exterior construction (AWPA UC4C). The 8" – 12" SDWH27G fasteners are the subject of IAPMO-UES ER-192.

See illustrations for two beam-to-post conditions using the SDWH27G to make the connection. Minimum fastener spacing requirements are shown below. The following table provides allowable shear and uplift loads tested in accordance with ICC-ES AC233, when installed through the top of a wood beam into the end grain of a wood post.

For more information, see p. 57, C-F-2019 Fastening Systems Catalog

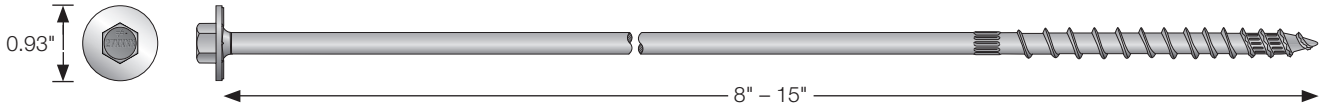

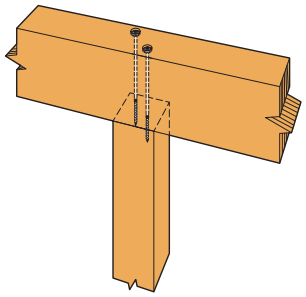

Continuous Beam over Post

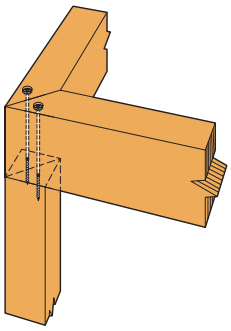

Mitered Beam over Corner Post

Beam-to-Post Connection

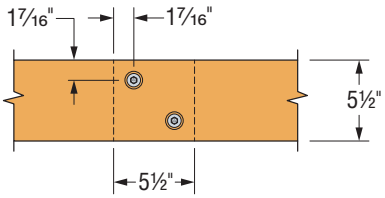

Continuous Beam over Post
(6x shown, 8x similar)

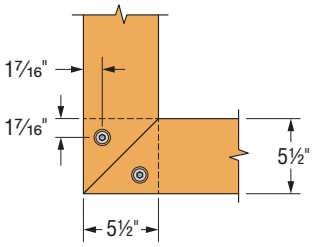

Mitered Beam over Corner Post
(6x shown, 8x similar)

Plan View

SDWH Timber-Hex HDG — Allowable Uplift Loads for Beam-to-Top-of-Post Connections

Screw Length (in.)	Model No.	Thread Length (in.)	Screws per Post	Max Beam Depth (in.)	Reference DFL/SP Allowable Load per Post (lb.)			
					Mitered Beam over Corner Post		Continuous Beam	
					Uplift	Shear	Uplift	Shear
8	SDWH27800G	3	2	5	905	665	920	725
10	SDWH271000G	3	2	7				
12	SDWH271200G	3	2	9				
15	SDWH271500G	3	2	12				

1. Allowable loads are shown at the wood load duration factor of C_D = 1.0. Loads may be increased for load duration per the building code up to C_D = 1.6. Tabulated values must be multiplied by all applicable adjustment factors per NDS.
2. Tabulated loads are based on entire threaded length installed into post.
3. For in-service moisture content greater than 19%: shear C_M = 0.70, withdrawal C_M = 0.65.
4. Tabulated shear loads are for the beam loaded parallel or perpendicular to grain with the SDWH27G embedded in the end grain of the post.
5. Tabulated loads are total for the connection, not per screw.
6. Maximum beam depths account for no countersinking of the screw. Screws may be countersunk a maximum of ½" depth with no reduction in allowable loads which will allow the 8", 10" and 12" screw lengths to be installed in 6x, 8x, 10x and 12x nominal beam depths, respectively.

C-F-2019TECHSUP ©2019 SIMPSON STRONG-TIE COMPANY INC.

Strong-Drive® SD CONNECTOR Screw

Connections built to last.

Metal-to-Wood and Connector Fastening

Connector Fastening

Fastener Types for Connectors 126

Connector/Steel-to-Wood Fastening

Strong-Drive® SDS HEAVY-DUTY CONNECTOR Screw 129
Wafer-Head Screw 130
Strong-Drive® SD CONNECTOR Screw 130
Approved Connectors for SD CONNECTOR Screw 131
Strong-Drive® SCN SMOOTH-SHANK CONNECTOR Nail . . 134
Strong-Drive® SCNR RING-SHANK CONNECTOR Nail 135
OUTDOOR ACCENTS® Structural Wood Screw 136
OUTDOOR ACCENTS® Connector Screw 137

Fastener Types and Sizes Specified for Simpson Strong-Tie® Connectors

Many Simpson Strong-Tie connectors have been designed and tested for use with specific types and sizes of fasteners. The specified quantity, type and size of fastener must be installed in the correct holes on the connector to achieve published loads. Other factors such as fastener material and finish are also important. Incorrect fastener selection or installation can compromise connector performance and could lead to failure. For more information about fasteners, see our *Fastening Systems* catalog at **strongtie.com** or access our Fastener Finder software at **strongtie.com/software**.

The Simpson Strong-Tie Strong-Drive® Connector screw is the only screw that is approved as an alternate to nails with our connectors.

The allowable loads of stainless-steel connectors match those of carbon-steel connectors when installed with Simpson Strong-Tie stainless-steel, SCNR ring-shank nails. For more information, refer to engineering letter L-F-SSNAILS at **strongtie.com.**

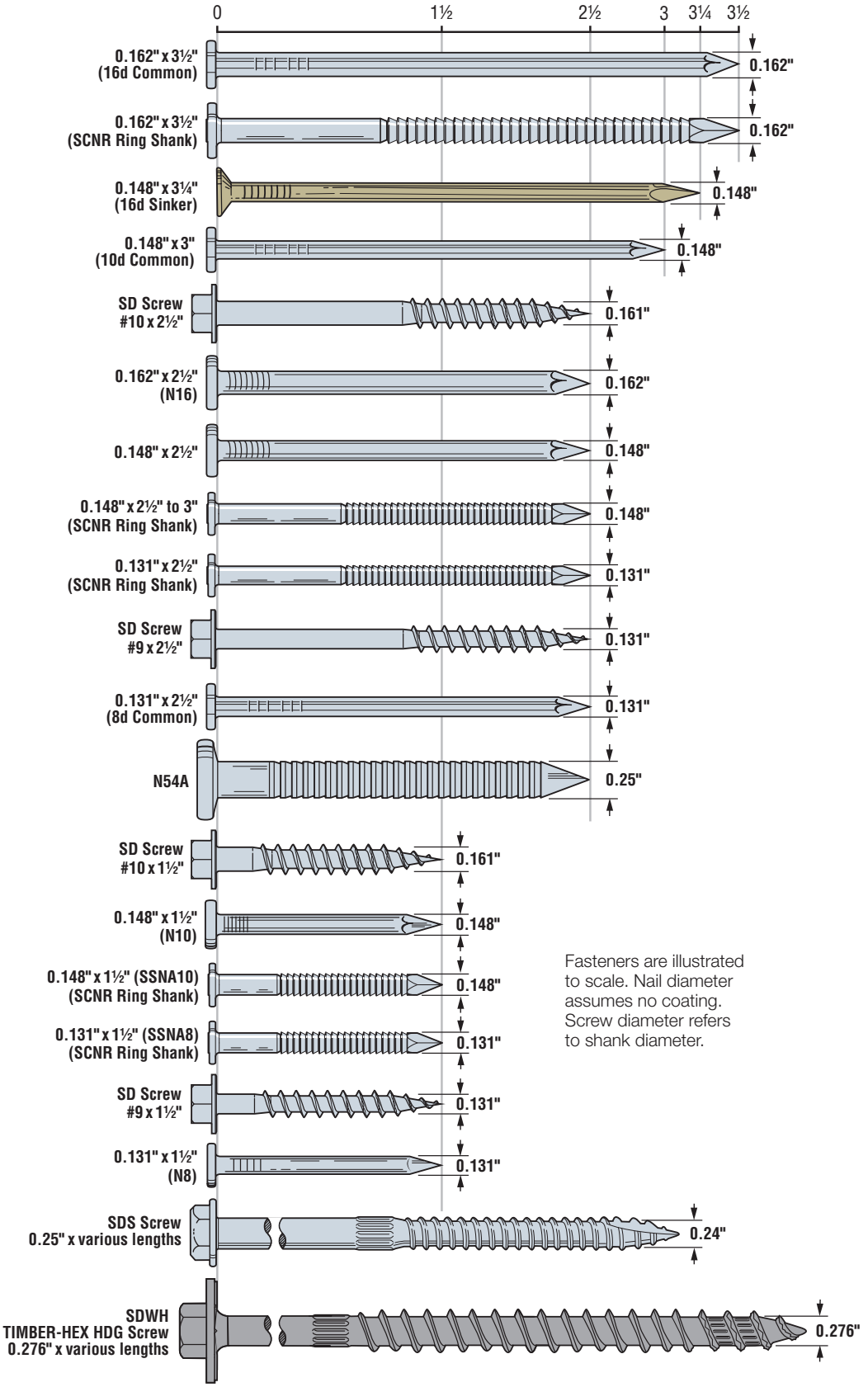

Fasteners are illustrated to scale. Nail diameter assumes no coating. Screw diameter refers to shank diameter.

C-F-2019TECHSUP ©2019 SIMPSON STRONG-TIE COMPANY INC.

Connector Fastening

In some cases, it is desirable to install Simpson Strong-Tie® face-mount joist hangers and straight straps with nails that are a different type or size than what is called out in the load table. In these cases, these reduction factors must be applied to the allowable loads listed for the connector.

Load Adjustment Factors for Optional Fasteners Used with Face-Mount Hangers, Post Bases and Caps, and Straight Straps

Connector Table Nail	Replacement Fastener	Allowable Load Adjustment Factor				
		Face-Mount Hangers			Post Bases and Caps	Straight Straps
		Straight Download/ Uplift	Double Shear			
			Uplift	Download		
0.131" x 1½"	#9 x 1½" SD Connector screw	1.00	N/A	N/A	N/A	1.00
0.131" x 2½"	0.131" x 1½"	0.85	N/A	N/A	N/A	1.00
	#9 x 1½" SD Connector screw	1.00	N/A	N/A	N/A	1.00
0.148" x 1½"	#9 x 1½" SD Connector screw	1.00	N/A	N/A	N/A	1.00
	0.131" x 1½"	0.83	N/A	N/A	N/A	0.83
0.148" x 3"	0.131" x 1½"	0.71	Not allowed	Not allowed	N/A	0.83
	0.131" x 2½"	0.83	0.65	0.83	0.83	0.83
	0.148" x 1¼"	0.64	Not allowed	Not allowed	N/A	1.00[9]
	0.148" x 1½"	0.77	Not allowed	Not allowed	N/A	1.00[9]
	0.148" x 2½"	1.00	0.80	1.00	1.00	1.00
	0.148" x 3¼"	1.00	1.00	1.00	1.00	1.00
	#9 x 1½" SD Connector screw	1.00	Not allowed	Not allowed	N/A	1.00
	#9 x 2½" SD Connector screw	1.00	See **strongtie.com**[4]		1.00	1.00
0.148" x 3¼"	0.148" x 1½"	0.77	N/A	N/A	N/A	1.00
	0.148" x 1¼"	0.64	N/A	N/A	N/A	1.00
	0.148" x 3"	1.00	1.00	1.00	1.00	1.00
	#9 x 1½" SD Connector screw	1.00	N/A	N/A	N/A	1.00
	#9 x 2½" SD Connector screw	1.00	N/A	N/A	N/A	1.00
0.162" x 2½"	#10 x 1½" SD Connector screw	1.00	Not allowed	Not allowed	N/A	1.00
	#10 x 2½" SD Connector screw	1.00	See **strongtie.com**[4]		1.00	1.00
0.162" x 3½"	0.162" x 2½"	1.00	0.67	1.00	1.00	1.00
	0.148" x 2½"	0.84	0.67	0.84	1.00	1.00
	0.148" x 3"	0.84	0.84	0.84	0.84	0.84
	0.148" x 3¼"	0.84	0.84	0.84	0.84	0.84
	0.148" x 1½"	0.64	Not allowed	Not allowed	Not allowed	1.00[8]
	#10 x 1½" SD Connector screw	1.00	Not allowed	Not allowed	N/A	1.00
	#10 x 2½" SD Connector screw	1.00	See **strongtie.com**[4]		1.00	1.00

1. Allowable load adjustment factors shown in the table are applicable for all face-mount hangers and straight straps throughout this catalog, except as noted in the footnotes below.
2. Some products have been tested specifically with alternate fasteners and have allowable load adjustment factors or reduced capacities published on the specific product page. Those values on the product page may be used in lieu of the values calculated using this table.
3. This table does not apply to SUR/SUL/HSUR/HSUL hangers or to hangers modified per allowed options, or to connectors made from steel thicker than 10 ga. Allowable loads for SUR/SUL/HSUR/HSUL hangers installed with Strong-Drive® SD Connector screws can be found online in engineering letter L-C-SLSKHGRSD16.
4. Strong-Drive SD Connector screw substitutions in this table do not apply to sloped, skewed or double-shear hangers except those noted in L-C-SLSKHGRSD16. For additional information and specific allowable loads, refer to **strongtie.com/sd**.
5. Nails and Strong-Drive SD Connector screws may not be combined in a connection.
6. Do not substitute 10d x 1½" nails for face nails on slope and skew combinations or skewed only LSU and LSSU.
7. For straps installed over sheathing use a 2½" long fastener minimum.
8. Where noted, use 0.80 for 10 ga., 11 ga., and 12 ga. products when using SPF lumber.
9. Where noted, use 0.92 for 10 ga., 11 ga., and 12 ga. products when using SPF lumber.

For LUS, MUS, HUS, LRU, HHUS and HGUS Hangers

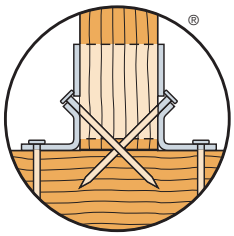

Double-shear nailing shall use minimum 3"-long nails or 2½"-long SD screws

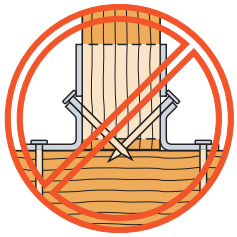

Shorter fasteners may not be used as double-shear nails

C-F-2019TECHSUP ©2019 SIMPSON STRONG-TIE COMPANY INC.

Connector Fastening

Fastening Identification

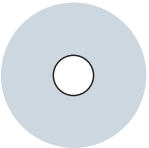

Round Holes
Purpose: To fasten a connector.
Fill Requirements: Always fill, unless noted otherwise.

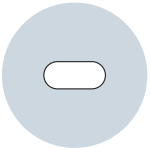

Obround Holes
Purpose: To make fastening a connector in a tight location easier.
Fill Requirements: Always fill.

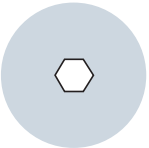

Hexagonal Holes
Purpose: To fasten a connector to concrete or masonry.
Fill Requirements: Always fill when fastening a connector to concrete or masonry.

Triangular Holes
Purpose: To increase a connector's strength or to achieve Max strength.
Fill Requirements: When the Designer specifies max. nailing.

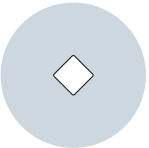

Diamond Holes
Purpose: To temporarily fasten a connector to make installing it easier.
Fill Requirements: None.

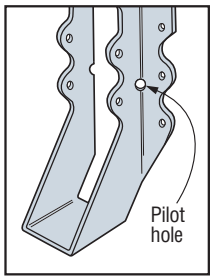

Pilot Holes
Tooling holes for manufacturing purposes. No fasteners required.

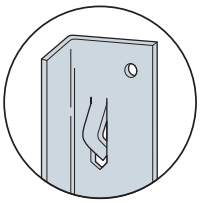

Speed Prongs
Used to temporarily position and secure the connector for easier and faster installation.

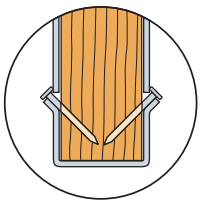

Positive Angle Nailing (PAN)
Provided when wood splitting may occur, and to speed installation.

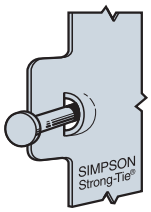

Dome Nailing
This feature guides the nail into the joist and header at a 45° angle.
US Patent 5,603,580

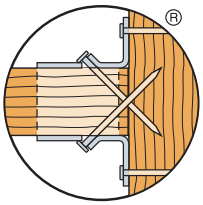

Double-Shear Nailing
The nail is installed into the joist and header, distributing the load through two points on each joist nail for greater strength.

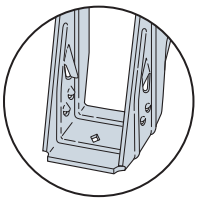

ITS/IUS Strong-Grip™
The Strong-Grip seat allows the I-joist to "snap" in securely without the need for joist nails.

C-F-2019TECHSUP ©2019 SIMPSON STRONG-TIE COMPANY INC.

Strong-Drive®
SDS HEAVY-DUTY CONNECTOR Screw

Heavy-Duty Simpson Strong-Tie® Connectors

The Simpson Strong-Tie Strong-Drive SDS screw is a ¼"-diameter high-strength structural wood screw ideal for various connector installations as well as wood-to-wood, general metal-to-wood and EWP fastening applications.

Install Tips: A low-speed ½" drill with a ⅜" hex driver (BITHEXR38-134) is the recommended tool for installation.

Codes/Standards: ICC-ES ESR-2236; City of L.A. RR25711, State of Florida FL9589

For more information, see p. 60, C-F-2019 Fastening Systems Catalog

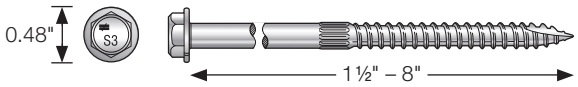

SDS — Allowable Shear Loads — Steel Side-Plate Applications

Size (in.)	Model No.	Thread Length (in.)	Coating/ Material	Reference DFL/SP Allowable Shear Loads (lb.)			Reference SPF/HF Allowable Shear Loads (lb.)		
				Steel Side Plate Thickness, mil (ga.)			Steel Side Plate Thickness, mil (ga.)		
				54 (16)	68 and 97 (14 and 12)	123 (10) or greater	54 (16)	68 and 97 (14 and 12)	123 (10) or greater
¼ x 1½	SDS25112	1	Double-barrier coating	250	250	250	180	180	180
¼ x 2	SDS25200	1¼		250	290	290	180	210	210
¼ x 2½	SDS25212	1½		250	390	420	180	280	300
¼ x 3	SDS25300	2		250	420	420	180	300	300
¼ x 3½	SDS25312	2¼		250	420	420	180	300	300
¼ x 4½	SDS25412	2¾		250	420	420	180	300	300
¼ x 5	SDS25500	2¾		250	420	420	180	300	300
¼ x 6	SDS25600	3¼		250	420	420	180	300	300
¼ x 8	SDS25800	3¼		250	420	420	180	300	300
¼ x 1½	SDS25112SS	1	Type 316 stainless steel	250	250	250	180	180	180
¼ x 2½	SDS25212SS	1½		250	390	420	180	280	300
¼ x 3	SDS25300SS	2		250	420	420	180	300	300
¼ x 3½	SDS25312SS	2¼		250	420	420	180	300	300

1. Allowable loads are shown at the wood load duration factor of C_D = 1.00. Loads may be increased for load duration up to a C_D = 1.60.
2. Allowable withdrawal load for DFL/SP/SCL is 172 lb./in. and for SPF/HF withdrawal is 121 lb./in. Total withdrawal load is based on actual thread penetration into the main member.
3. LSL wood-to-wood applications that require 4½", 5", 6" and 8" SDS screws are limited to interior-dry use only.
4. Minimum spacing requirements are listed in ICC-ES ESR-2236.

C-F-2019TECHSUP ©2019 SIMPSON STRONG-TIE COMPANY INC.

Wafer-Head Screw

General Wood-to-Wood, Metal-to-Wood Fastening

For more information, see p. 87, C-F-2019 Fastening Systems Catalog

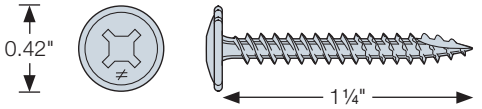

Allowable Loads

Size (in.)	Model No.	Reference Allowable Shear Loads (lb.) Steel Side Plate Thickness, in. (ga.) 0.054 – 0.25 (16-3)		Reference Allowable Withdrawal Loads (lb.)	
		DFL/SP	SPF/HF	DFL/SP	SPF/HF
#8 x 1¼	SD8x1.25	50	45	82	58

1. Allowable loads are shown at the wood load duration factor of C_D = 1.00. Loads may be increased for load duration up to a C_D = 1.60.
2. SD8x1.25 requires ¾" minimum penetration into the main member.
3. Do not use SD8x1.25 wood screws with structural connectors unless specified.
4. Warning: Industry studies show that hardened fasteners can experience performance problems in wet or corrosive environments. Accordingly, use this product in dry, interior, and noncorrosive environments only.

Strong-Drive® SD CONNECTOR Screw

Simpson Strong-Tie® Connectors

Codes/Standards: ICC-ES ESR-3046, State of Florida FL 9589

For more information, see p. 61, C-F-2019 Fastening Systems Catalog

SD — Allowable Shear Loads — Steel Side Plate

Size (in.)	Model No.	Thread Length (in.)	Reference Allowable Shear Loads with Steel Side Plates (lb.)	
			DFL/SP	SPF/HF
#9 x 1½	SD9112	1	171	112
#9 x 2½	SD9212	1	200	112
#10 x 1½	SD10112	1	173	138
#10 x 2½	SD10212	1	215	165

1. Loads are given for C_D = 1.00 and may be increased for load duration per the building code to C_D = 1.60.
2. Steel side-plate thickness is 33 to 100 mil (20 – 12 ga.).

C-F-2019TECHSUP ©2019 SIMPSON STRONG-TIE COMPANY INC.

Strong-Drive® SD CONNECTOR Screw

Connectors approved for use with the Strong-Drive SD Connector screw. This is current as of this printing. We are constantly testing and updating this information. For the most updated information, see strongtie.com.

Model No.	SD9 Qty.		SD10 Qty.	
	1½"	2½"	1½"	2½"
A21	(4)	—	—	—
A223	(8)	—	—	—
A33	(8)	—	—	—
A34	(8)	—	—	—
A35	(12)	—	—	—
A44	(8)	—	—	—
ABA44Z	(6)	—	—	—
ABA44RZ	(6)	—	—	—
ABA46Z	—	—	(8)	—
ABA66Z	—	—	(8)	—
ABA66RZ	—	—	(8)	—
ABU44Z	—	—	(12)	—
ABW44Z	(8)	—	—	—
ABW44RZ	(8)	—	—	—
ABW46Z	(10)	—	—	—
ABW46RZ	(10)	—	—	—
ABW66Z	(12)	—	—	—
ABW66RZ	(12)	—	—	—
AC4	—	—	(28)	—
AC6	—	—	(28)	—
BC4	—	—	(12)	—
BC40	—	—	(10)	—
BC60	—	—	(10)	—
BCS2-2/4	—	(14)	—	—
CS/CMST Straps	See p. 127 for straight strap fastener substitutions and reduction factors.			
CTS218	(24)	—	—	—
DJT14Z	—	—	—	(8)
DPT5Z	(5)	—	—	—
DPT7Z	(5)	—	—	—
EPB44	—	—	(8)	—
EPB44PHDG	—	—	(8)	—
EPC4Z	(18)	—	—	—
EPC6Z	(18)	—	—	—
EPC8Z	(18)	—	—	—
FB24Z	(5)	—	—	—
FB24R	(5)	—	—	—
FB26	(6)	—	—	—
FBFZ	(4)	—	—	—

Model No.	SD9 Qty.		SD10 Qty.	
	1½"	2½"	1½"	2½"
FBR24Z	(5)	—	—	—
FPBM44	(8)	—	—	—
FWH2	(16)	—	—	—
GA1	(4)	—	—	—
GA2	(6)	—	—	—
H1	(10)	—	—	—
H2.5	(10)	—	—	—
H2.5A	(10)	—	—	—
H3	(8)	—	—	—
H8	(10)	—	—	—
H10A	(18)	—	—	—
H10A-2	(18)	—	—	
HGUS and HHUS Hangers	See **strongtie.com** for Strong-Drive SD Connector screw substitutions and allowable loads.			
HHRC2-2	—	—	—	(62)
HHRC42-2	—	—	—	(62)
HHRC4/1.81	—	—	—	(62)
HHRC44	—	—	—	(62)
HHRC5.25/3.25	—	—	—	(62)
HHRC5.37/3.12	—	—	—	(62)
HHRC5.37/3.56	—	—	—	(62)
HHRC64	—	—	—	(67)
HHRC66	—	—	—	(67)
HPTZ	—	—	(8)	—
HRS6	(6)	—	—	—
HRS8	(10)	—	—	—
HRS12	(14)	—	—	—
HTP37Z	(20)	—	—	—
HU Hangers	See p. 127 for face-mount hanger fastener substitutions and reduction factors.			
HSUR/L 45° Skewed Hangers	See **strongtie.com** for Strong-Drive SD Connector screw substitutions and allowable loads.			
HTT4	—	—	(18)	—
HTT5	—	—	(26)	—
HTU26	(31)	—	—	—
HTU26 (Min.)	(34)	—	—	—
HTU26 (Max.)	(40)	—	—	—
HTU28 (Min.)	(40)	—	—	—
HTU28 (Max.)	(52)	—	—	—

See footnotes on p. 133.

C-F-2019TECHSUP ©2019 SIMPSON STRONG-TIE COMPANY INC.

Strong-Drive® SD CONNECTOR Screw (cont.)

Connectors approved for use with the Strong-Drive SD Connector screw. This is current as of this printing. We are constantly testing and updating this information. For the most updated information, see strongtie.com.

Model No.	SD9 Qty.		SD10 Qty.	
	1½"	2½"	1½"	2½"
HTU210 (Min.)	(46)	—	—	—
HTU210 (Max.)	(64)	—	—	—
HTU26-2 (Min.)	(34)	—	—	—
HTU26-2 (Max.)	(40)	—	—	—
HTU28-2 (Min.)	(40)	—	—	—
HTU28-2 (Max.)	(52)	—	—	—
HTU210-2 (Min.)	(46)	—	—	—
HTU210-2 (Max.)	(64)	—	—	—
HUS26	—	—	—	(20)
HUS28	—	—	—	(30)
HUS210	—	—	—	(40)
HUS26-2	—	—	—	(8)
HUS28-2	—	—	—	(12)
HUS210-2	—	—	—	(16)
HUS212-2	—	—	—	(20)
HUS46	—	—	—	(8)
HUS48	—	—	—	(12)
HUS410	—	—	—	(16)
HUS412	—	—	—	(20)
HUS1.81/10	—	—	—	(40)
IUS Hangers	See p. 127 for face-mount hanger fastener substitutions and reduction factors.			
KBS1Z	(12)	—	—	—
L30	(4)	—	—	—
L50	(6)	—	—	—
L70	(8)	—	—	—
L90	(10)	—	—	—
LCE4	—	—	(24)	—
LPC4Z	(16)	—	—	—
LRU26Z	—	—	—	(9)
LRU28Z	—	—	—	(10)
LRU210Z	—	—	—	(12)
LRU212Z	—	—	—	(13)
LSCZ	(17)	—	—	—
LSTA9	(8)	—	—	—
LSTA12	(10)	—	—	—
LSTA15	(12)	—	—	—
LSTA18	(14)	—	—	—
LSTA21	(14)	—	—	—

Model No.	SD9 Qty.		SD10 Qty.	
	1½"	2½"	1½"	2½"
LSTA24	(14)	—	—	—
ST292	—	—	(12)	—
ST2122	—	—	(12)	—
ST2115	—	—	(6)	—
ST2215	—	—	(14)	—
LSTA30	(14)	—	—	—
LSTA36	(14)	—	—	—
LSTI49	(16)	—	—	—
LSTI73	(16)	—	—	—
LTP4	(12)	—	—	—
LU Hangers	See p. 127 for face-mount hanger fastener substitutions and reduction factors.			
LU24 (10d)	(6)	—	—	—
LU26 (10d)	(10)	—	—	—
LU28 (10d)	(10)	—	—	—
LU210 (10d)	(16)	—	—	—
LUC26Z (10d)	(10)	—	—	—
LUC210Z (10d)	(16)	—	—	—
LUS24	(4)	(2)	—	—
LUS26	(4)	(4)	—	—
LUS28	(6)	(4)	—	—
LUS210	(8)	(4)	—	—
LUS36	(4)	(4)	—	—
LUS310	(6)	(4)	—	—
LUS24-2	(4)	(4)	—	—
LUS26-2	(4)	(4)	—	—
LUS28-2	(6)	(4)	—	—
LUS210-2	(8)	(6)	—	—
LUS214-2	(10)	(6)	—	—
LUS26-3	(4)	(4)	—	—
LUS28-3	(6)	(4)	—	—
LUS210-3	(8)	(6)	—	—
LUS44	(4)	(2)	—	—
LUS46	(4)	(4)	—	—
LUS48	(6)	(4)	—	—
LUS410	(8)	(6)	—	—
LUS414	(10)	(6)	—	—
LSU4.12	—	(40)	—	—
LSU4.28	—	(40)	—	—

C-F-2019TECHSUP ©2019 SIMPSON STRONG-TIE COMPANY INC.

Strong-Drive® SD CONNECTOR Screw (cont.)

Connectors approved for use with the Strong-Drive SD Connector screw. This is current as of this printing. We are constantly testing and updating this information. For the most updated information, see strongtie.com.

Model No.	SD9 Qty.		SD10 Qty.	
	1½"	2½"	1½"	2½"
LSU3510-2	—	(40)	—	—
LSU5.12	—	(40)	—	—
LUS26	(11)	—	—	—
MIU Hangers	See p. 127 for face-mount hanger fastener substitutions and reduction factors.			
MST MSTI Straps	See p. 127 for straight strap fastener substitutions and reduction factors.			
MSTA Straps	See p. 127 for straight strap fastener substitutions and reduction factors.			
MSTC Straps	See p. 127 for straight strap fastener substitutions and reduction factors.			
MSTI Straps	See p. 127 for straight strap fastener substitutions and reduction factors.			
MTS12	(14)	—	—	—
MTS16	(14)	—	—	—
MTS20	(14)	—	—	—
NS1	(2)	—	—	—
NS2	(2)	—	—	—
PA51	(10)	—	—	—
PA68	(10)	—	—	—
PBS44A	—	—	(14)	—
PC4Z	(18)	—	—	—
PC6Z	(18)	—	—	—
PC8Z	(18)	—	—	—
PBS44A	—	—	(14)	—
PF24	—	(6)	—	—
PF26	—	(4)	—	—
PSPN58Z	—	—	(4)	—
PSPN516Z	—	—	(12 to 24)	—
RR	(8)	—	—	—
RSP4	(8)	—	—	—
RTA12	(16)	—	—	—
RTA2Z	(8)	—	—	—
RTA4	(12)	—	—	—
RTB22	(8)	—	—	—
RTC22Z	(11)	—	—	—
RTC2Z	(12)	—	—	—
RTC42	—	—	(22)	—
RTC44	—	—	(29)	—
RTF2Z	(13)	—	—	—

Model No.	SD9 Qty.		SD10 Qty.	
	1½"	2½"	1½"	2½"
RTT22Z	(10)	—	—	—
SS1.5	(12)	—	—	—
SS2.5	(12)	—	—	—
SS3	(12)	—	—	—
SS4.5	(14)	—	—	—
ST9	—	—	(8)	—
ST12	—	—	(10)	—
ST18	—	—	(12)	—
ST22	—	—	(12)	—
ST292	—	—	(12)	—
ST2115	—	—	(6)	—
ST2122	—	—	(12)	—
ST2215	—	—	(14)	—
ST6215	—	—	(16)	—
ST6224	—	—	(20)	—
ST6236	—	—	(28)	—
SUR/L 45° Skewed Hangers	See **strongtie.com** for Strong-Drive SD Connector screw substitutions and allowable loads.			
THASR/L29	(7)	(12)	—	—
THASR/L29-2	—	(20)	—	—
THASR/L422	—	(20)	—	—
TJC57	(24)	—	—	—
TP/TPA Tie Plates	Not load rated. Use #9 x 1½" Strong-Drive SD Connector screw. Quantity as required.			
U Hangers	See p. 127 for face-mount hanger fastener substitutions and reduction factors.			
VTCR	(7)	—	—	—

1. Strong-Drive SD Connector screw substitutions may have load reductions. For additional information and specific allowable loads, refer to **strongtie.com/sd**.
2. **Fasteners:** SD screws are Simpson Strong-Tie® Strong-Drive screws. See p. 130 for fastener information.

C-F-2019TECHSUP ©2019 SIMPSON STRONG-TIE COMPANY INC.

Strong-Drive® SCN SMOOTH-SHANK CONNECTOR Nail

Simpson Strong-Tie® Connectors

For more information, see pp. 108 and 130, C-F-2019 Fastening Systems Catalog

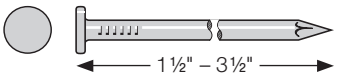

8	8	10	10	10d	16	16d
0.131" x 1½"	0.131" x 2½"	0.148" x 1½"	0.148" x 2½"	0.148" x 3"	0.162" x 2½"	0.162" x 3½"

SCN Smooth-Shank Head Stamps

Simpson Strong-Tie connectors have been designed and tested with specific types of nails, which are generally referred to as Structural Connector Nails (SCN). The specified nail size, type and quantity must be installed in the correct holes of the connector or strap to achieve the published loads for the hardware. The dimensions and bending yield strength characteristics needed for nails used in Simpson Strong-Tie connectors and hardware are given in the table below. The Designer and installer must be sure that the correct fastener is specified and installed. In cases where the installed nail matches the criteria of the nail specified for the hardware, full hardware design values result.

SCN Smooth-Shank Connector Nails and Common Nails Approved for Use with Simpson Strong-Tie Connectors[1,2,3]

Size (in.)	Fastener	Head Style	Head Diameter (in.)	Minimum Bending Yield Strength (psi)[4,6]
0.131 x 1½	N8	Round	0.281	100,000
0.131 x 2½	8d common	Round	0.281	100,000
0.148 x 1½	N10	Round	0.281	90,000
0.148 x 2½	N10D	Round	0.281	90,000
0.148 x 3	10d common	Round	0.281[5]	90,000
0.162 x 2½	N16	Round	0.281	90,000
0.162 x 3½	16d common	Round	0.281[5]	90,000

1. Tolerance on diameter and length per ASTM F1667.
2. Tolerance on head diameter (±0.0015 in.)
3. All dimensions are prior to coating.
4. Tested in accordance with ASTM F1575.
5. Minimum head diameter shown; actual head diameters on 10d and 16d common nails are larger.
6. Minimum bending yield strengths applicable to SCNR nails of the same diameter.

Power-driven SCNs are often used to install Simpson Strong-Tie connectors and straps. Power-driven nails must have the same dimensions and bending yield strength as hand-driven nails. Dedicated power nailers are designed to drive nails of specific lengths that may be less than the length required to achieve full design values for the connector or strap hardware. When connectors and straps are installed with power-driven nails or hand-driven nails that are a different type or size than those called out in the connector and strap specifications, adjustment factors as given on **strongtie.com** must be applied to the allowable loads for the connector or strap.

Overdriven Nails in Connectors and Straps

A nail that is installed such that the head deforms the steel of the connector or strap is considered overdriven. Extra care to prevent overdriven nails should be taken when installing power-driven nails. Simpson Strong-Tie has evaluated the effect of overdriven nails in connectors and straps. No load reductions for connectors or straps apply as a result of overdriven nails if all of the following conditions are met:

- Connectors and straps are 14-, 16-, or 18-gauge steel.
- The top of the nail head is not driven past flush with the face of the metal hardware.
- The nail goes through an existing fastener hole without enlarging it.
- The steel around the hole is not torn or damaged other than denting caused by the nail head.

C-F-2019TECHSUP ©2019 SIMPSON STRONG-TIE COMPANY INC.

Strong-Drive® SCNR RING-SHANK CONNECTOR Nail

Simpson Strong-Tie® Connectors

Strong Drive® SCNR Ring-Shank Connector nails are the best choice for achieving maximum load values in stainless-steel connectors.

For more information, see pp. 109 and 131, C-F-2019 Fastening Systems Catalog

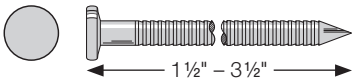

0.131" x 1½" 0.131" x 2½" 0.148" x 1½" 0.148" x 2½" 0.148" x 3" 0.162" x 3½"

SCNR Ring-Shank Head Stamps

When installing galvanized connectors and straps, use an SCN that is zinc galvanized. If the connectors and straps are stainless steel, then stainless-steel SCNRs shall be used.

Stainless-Steel Nails

The USDA Forest Service, Forest Products Laboratory showed that stainless-steel nails with smooth shanks do not have the same withdrawal resistance as smooth-shank carbon steel nails (Withdrawal strength and bending yield strength of stainless-steel nails, 2015, *Journal of Structural Engineering*). In addition, Simpson Strong-Tie conducted an extensive series of withdrawal testing with stainless-steel nails made from Type 304, Type 305 and Type 316 stainless steels to assess the stainless-steel ring-shank nail withdrawal performance over a wide range of nail diameters (0.072 in. to 0.238 in.) and wood specific gravities (0.42 to 0.55). The withdrawal tests were conducted in accordance with ASTM D1761 using wood conditioned to 12-percent moisture content. Further, the reference allowable withdrawal resistance for each of the tested nails was calculated using the withdrawal calculation for post-frame ring-shank nails in NDS-12, equation 11.2-4 (NDS-15, equation 12.2-4), NDS-2015, equation 12.2-4 and NDS-2018, equation 12.4-5,

$$W = 1800\, G^2\, D$$

The allowable withdrawal loads for Simpson Strong-Tie stainless-steel ring-shank nails with a safety factor of 5.0 were at or above the calculated reference withdrawal resistance for deformed-shank nails. As a result, the deformed-shank nails equation for reference withdrawal design values can be safely used for Simpson Strong-Tie stainless-steel ring-shank nails of all diameters across the specific gravity range of 0.42 to 0.55. This finding and recommendation are specific to Simpson Strong-Tie stainless-steel ring-shank nails and shall not be applied to stainless-steel ring-shank nails made by other manufacturers.

The bending yield strength of Simpson Strong-Tie stainless-steel nails (smooth and ring-shank) meet the bending yield strength specifications of ASTM F1667, which are the same as those in the IBC and IRC.

Stainless Steel Nails for Connectors

Simpson Strong-Tie stainless-steel connectors are required to be installed using stainless-steel fasteners. Recent testing at Simpson Strong-Tie indicates that allowable load values for some Simpson Strong-Tie stainless-steel connectors have changed when smooth-shank stainless steel nails are used. Refer to **strongtie.com/products/categories/zmax.html** for a list of connectors available in stainless steel, which includes links to load tables for carbon steel and stainless-steel smooth-shank nail installations as applicable.

In cases where these load tables indicate stainless-steel smooth-shank nail installations have reduced loads, full allowable loads listed for the same carbon steel connector may be achieved if the stainless-steel connector is installed with the correct replacement stainless-steel Simpson Strong-Tie® Strong Drive® SCNR Ring-Shank Connector nails as shown in the following Nail Substitution Chart.

Nail Substitution Chart
Replacement Ring-Shank Stainless-Steel Nails, Type 316 Stainless Steel

Catalog-Specified Carbon-Steel Smooth-Shank Nail)	Replacement Stainless-Steel Strong-Drive SCNR Ring-Shank Connector Nail	
Size (in.) (Dia. x Length)	Hand-Drive	Collated
0.131 x 1.5	SSNA8	T10A150MCN
0.131 x 2.5	SSA8D	T10A250MCN
0.148 x 1.5	SSNA10	T9A150MCN
0.148 x 2.5	—	T9A250MCN
0.148 x 3.0	SSA10D	—
0.162 x 3.5	SSA16D	—

1. Collated nails listed are available in 33° paper tape strips.

C-F-2019TECHSUP ©2019 SIMPSON STRONG-TIE COMPANY INC.

Outdoor Accents® Structural Wood Screw

(Strong-Drive® SDWS TIMBER Screw)
Structural Wood-to-Wood Connections for Outdoor Accents Decorative Hardware

Designed to provide an easier and significantly faster installation time compared to through-bolting. When used with the patented hex-head washer (which is code report listed in IAPMO-UES ER-192), it provides a structural, decorative solution for Outdoor Accent products.

Double-barrier black (SDWS22DBB) and black exterior (STN22) coatings provide corrosion resistance equivalent to hot-dip galvanization (ASTM A153, Class D), making them suitable for certain exterior and preservative-treated wood applications.

Features:

- New patented SawTooth™ point ensures fast starts, reduces installation torque and eliminates the need for predrilling in most applications
- Deep 6-lobe T-40 recess for secure and easy driving (T-40 drive bit included)
- Underhead nibs offer greater control when seating the head

Codes/Standards: IAPMO-UES ER-192, State of Florida FL13975

US Patent: 9,523,383

For more information, see p. 58, C-F-2019 Fastening Systems Catalog

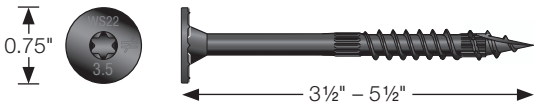

The SDWS22312DBB or SDWS22512DBB can be used in conjunction with the STN22 hex-head washer. When installing SDWS22312DBB and SDWS22512DBB, the STN22 can be placed onto wood or steel side plate member prior to screw installation.

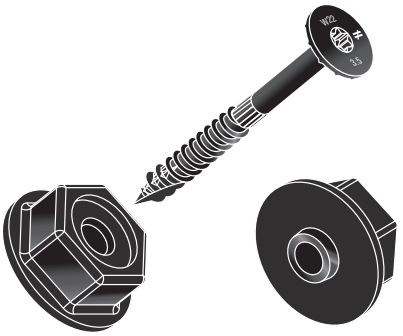

SDWS22312DBB with STN22 Hex-Head Washer

US Patents 10,253,801 and D773,546

SDWS Outdoor Accents Structural Wood Screw with STN22 Hex-Head Washer — Wood to Wood/Steel

Model No.	Thread Length (in.)	Reference Allowable Shear Loads (lb.)					
		2x Wood Side Member			12-ga. Steel Side Member		
		DFL/SP	SPF/HF	Western Cedar	DFL/SP	SPF/HF	Western Cedar
SDWS22312DBB with STN22	2	235	192	179	470	385	320
SDWS22512DBB with STN22	2¾	465	430	395	640	495	425

See footnotes below.

SDWS Outdoor Accents Structural Wood Screw — Wood to Wood

Model No.	Thread Length (in.)	Reference Allowable Shear Loads (lb.)			Reference Allowable Withdrawal Loads (lb./in.)		
		2x Wood Side Member					
		DFL/SP	SPF/HF	Western Cedar	DFL/SP	SPF/HF	Western Cedar
SDWS22312DBB	2	255	190	225	164	151	142
SDWS22512DBB	2¾	405	405	230	214	187	142

1. Allowable loads are for connections between two members with full thread penetration into the main member.
2. Allowable loads are shown at the wood load duration factor of C_D = 1.0. Loads may be increased for load duration per the building code up to a C_D = 1.60. Tabulated values must be multiplied by all applicable adjustment factors per the NDS.
3. Minimum spacing, edge and end distance requirements are per IAPMO-UES ER-192.
4. Loads are based on installation into the side grain of the wood with the screw axis perpendicular to the face of the member.

C-F-2019TECHSUP ©2019 SIMPSON STRONG-TIE COMPANY INC.

Outdoor Accents®
Connector Screw

(Strong-Drive® SD CONNECTOR Screw)
Structural Wood-to-Wood Connections for Outdoor Accents Decorative Hardware

The Outdoor Accents Connector Screw reduces installation time by driving easily without predrilling. Designed for installation with the Outdoor Accents APA21 90°-angle and APLH light joist hangers, the screw's black finish accents any outdoor living project.

Double-barrier black coating provides corrosion resistance equivalent to hot-dip galvanization (ASTM A153, Class D), making it suitable for certain exterior and preservative-treated wood applications.

Features:

- Tested and approved for use in many of our best-selling connectors for both interior and most exterior applications
- The single-fastener steel-side-plate load capacity of the SD10 exceeds the capacity of a 16d common nail
- Optimized heat-treating for ductility and strength
- ¼" hex drive bit included
- Head identification for easy inspection

Codes/Standards: ICC-ES ESR-3046, State of Florida FL 9589

For more information, see p. 59, C-F-2019 Fastening Systems Catalog

For more information on Outdoor Accents connector products, please see the *Wood Construction Connectors* catalog, C-C-2019.

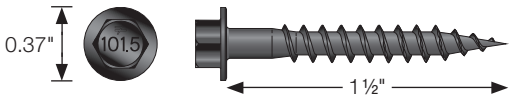

Outdoor Accents Connector Screw

Size (in.)	Model No.	Thread Length (in.)	Reference DFL/SP Allowable Loads		Reference SPF/HF Allowable Loads		Code Ref.
			Shear Steel Side Plate 20 ga. – 12 ga. (lb.)	Withdrawal (lb./in.)	Shear Steel Side Plate 20 ga. – 12 ga. (lb.)	Withdrawal (lb./in.)	
#10 x 1½	SD10112DBBR50	1	173	173	138	122	I24

1. Withdrawal loads and steel-side-plate shear loads are based on testing per AC233.
2. Allowable loads are shown at the wood load duration factor of C_D = 1.00. Loads may be increased for load duration per the building code up to a C_D = 1.60.
3. Withdrawal loads are in lb./in. of thread penetration into the side grain of the main member.
4. Visit **strongtie.com** for wood-to-wood shear values and wood-side-plate details.

C-F-2019TECHSUP ©2019 SIMPSON STRONG-TIE COMPANY INC.

Strong-Drive® TB WOOD-TO-STEEL Screw
Self-drilling, countersinking wood-to-steel fasteners.

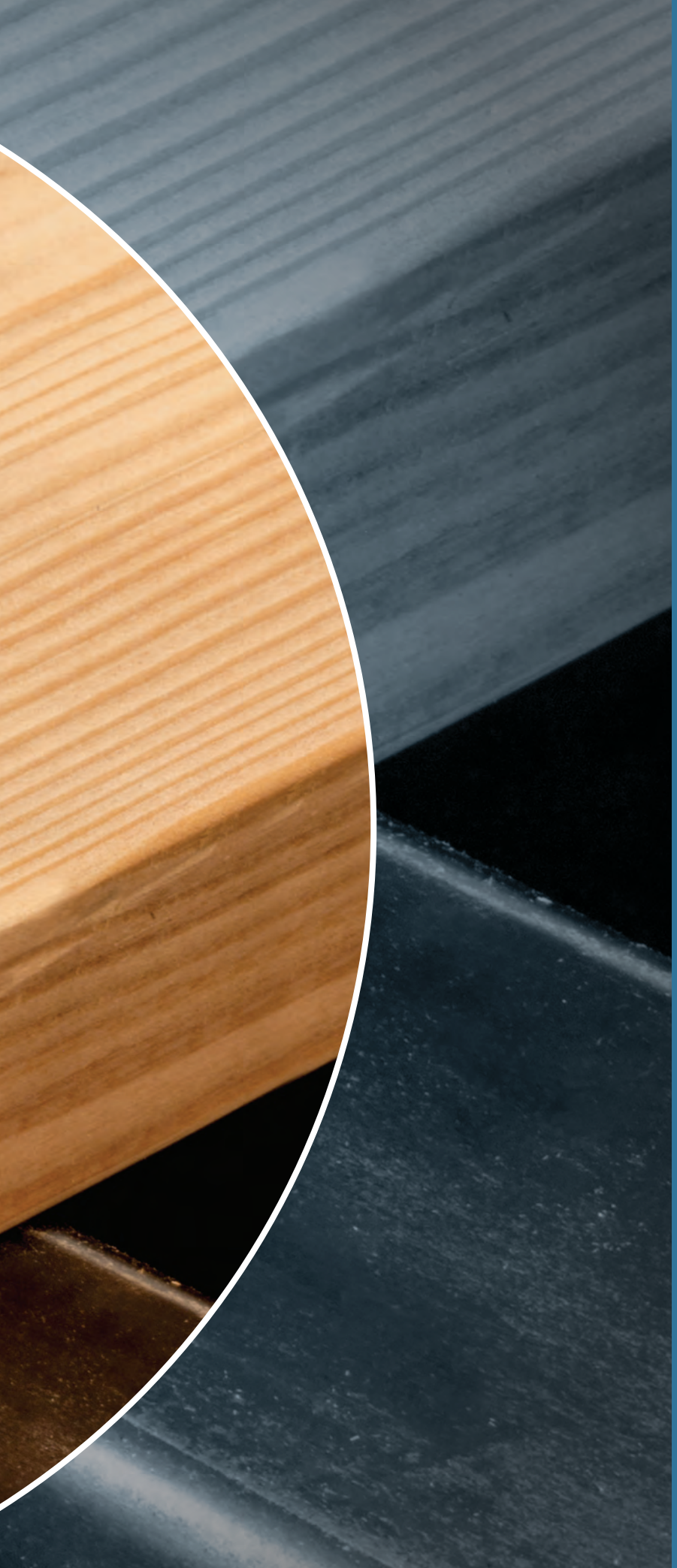

Nonmetal-to-Metal Fastening

Wood-to-Steel Fastening
Strong-Drive® TB WOOD-TO-STEEL Screw 140

Sheathing-to-Steel Fastening
Strong-Drive® PPSD SHEATHING-TO-CFS Screw 141
CBSDQ SHEATHING-TO-CFS Screw 143

SIMPSON Strong-Tie®

Strong-Drive® TB WOOD-TO-STEEL Screw

Common Applications:

- Wood to hot-rolled steel (Maximum recommended thicknesses: 5⁄16")

For more information, see pp. 93 and 207, C-F-2019 Fastening Systems Catalog

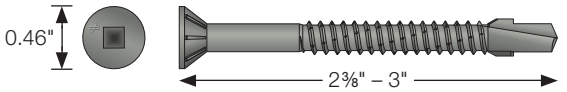

TB — Allowable Loads — DF and SP Lumber Attachment to Steel (Steel Members 16 ga.– 5⁄16" Thick)

Model No.	Length in. (mm)	Nominal Wood Thickness (in.)	Steel Thickness [mil (ga.)]	Reference DFL/SP Allowable Load (lb.)			
				Uplift		Shear	
				C_D=1.0	C_D=1.6	C_D=1.0	C_D=1.6
TB1460S	2⅜ (60)	2x	54 (16)	195	195	210	335
			68 (14)	225	225	210	335
			97–375 (12 – 5⁄16")	245	390	215	345
TB1475S	3 (75)		54 (16)	195	195	210	335
			68 (14)	225	225	210	335
			97–375 (12 – 5⁄16")	245	390	215	345

1. For use with structural steel members up to 5⁄16" thick or cold-formed steel members 54 mil (16 ga.) or thicker.
2. Standard product available in a black phosphate, yellow zinc or N2000 coating for additional corrosion protection *(TBG1460S or TBG1475S).*
3. For use with 2x (1½") DF/SP only.
4. For use as hand-driven fasteners or with Quik Drive® PROHSD60 or PROHSD75 auto-feed screw driving systems.
5. Use increased allowable loads (C_D=1.6) only when resisting wind or seismic forces.

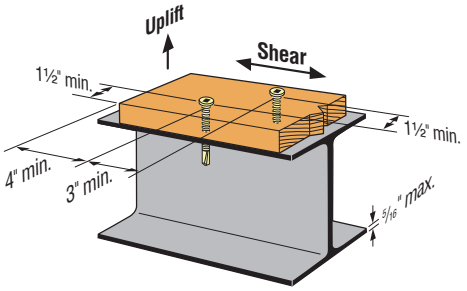

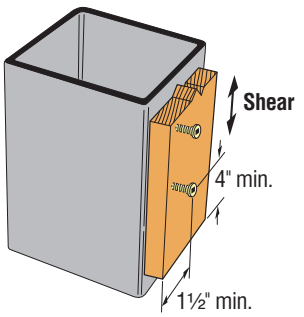

Nonmetal-to-Metal Fastening

C-F-2019TECHSUP ©2019 SIMPSON STRONG-TIE COMPANY INC.

Strong-Drive® PPSD SHEATHING-TO-CFS Screw

Common Application:
Wood structural panel/sheathing to cold-formed steel
(#8 — maximum thickness: 54 mil / 16 ga.; #10 — maximum thickness: 97 mil / 12 ga.)

Codes/Standards: ASTM C1513 compliant, ICC-ES ESR-4208

For more information, see pp. 94 and 209, C-F-2019 Fastening Systems Catalog

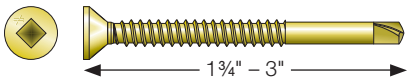

PPSD — Pull-Out Loads — Steel Connections

Model No.	Screw Size	Load Description	Reference Pull-out Loads (lb.)					
			Steel Thickness: [mil (ga.)]					
			27 (22)	33 (20)	43 (18)	54 (16)	68 (14)	97 (12)
PPSD11516S0818 PPSDQ11516S0818	#8	ASD	63	87	119	183	—	—
		LRFD	100	139	190	295	—	—
		Nominal strength	154	215	290	450	—	—
PPSD134S1016 PPSDQ134S1016	#10	ASD	80	128	194	315	425	480
		LRFD	128	205	310	500	680	765
		Nominal strength	225	325	480	765	1,045	1,205
PPSD3S1016	#10	ASD	80	128	194	315	425	480
		LRFD	128	205	310	500	680	765
		Nominal strength	225	325	480	765	1,045	1,205

1. Screws and connections have been tested per AISI Standard Methods S904-13 and S905-13.
2. Values are based on cold-formed steel (CFS) members with a minimum yield strength, F_y of 33 ksi and minimum tensile strength, F_u of 45 ksi for 43 mil (18 ga.) to 27 mil (22 ga.), and a minimum yield strength, F_y of 50 ksi and minimum tensile strength, F_u of 65 ksi for 54 mil (16 ga.) to 97 mil (12 ga.).
3. For design purposes, steel-sheet thicknesses are 0.0283" for 27 mil (22 ga.), 0.0346" for 33 mil (20 ga.), 0.0451" for 43 mil (18 ga.), 0.0566" for 54 mil (16 ga.), 0.0713" for 68 mil (14 ga.) and 0.1017" for 97 mil (12 ga.). The actual sheet thickness shall not be less than 95% of these design thicknesses as specified in AISI S100-12.
4. A minimum of three exposed screw threads are required to achieve the loads in the Table.
5. PPSDQxxx models have Quik Guard® coating; PPSDxxx models have yellow zinc coating.

C-F-2019TECHSUP ©2019 SIMPSON STRONG-TIE COMPANY INC.

Strong-Drive®
PPSD SHEATHING-TO-CFS Screw (cont.)

PPSD — Pull-Through Loads — Rated Sheathing Panels

Model No.	Screw Size	Load Description	Reference Pull-Through Loads (lb.)					
			Minimum Nominal Panel Thickness (in.)					
			Plywood			OSB		
			15/32	19/32	23/32	15/32	19/32	23/32
PPSD11516S0818 PPSDQ11516S0818	#8	ASD	83	84	116	49	109	117
		LRFD	179	181	250	106	235	255
		Nominal strength	415	420	580	245	545	585
PPSD134S1016 PPSDQ134S1016	#10	ASD	75	85	118	52	111	114
		LRFD	162	184	255	112	240	245
		Nominal strength	375	425	590	260	555	570
PPSD3S1016	#10	ASD	75	85	118	52	111	114
		LRFD	162	184	255	112	240	245
		Nominal strength	375	425	590	260	555	570

1. The tabulated values are based on testing per AC233.
2. ASD pull-through loads based on a factor of safety of five applied to the nominal strength value (C_D = 1.0, increases to C_D = 1.6 allowed where applicable).
3. LRFD load based on adjustment of ASD load per NDS 2018, Appendix N using K_F = 3.32, ϕ_ζ = 0.65, and λ =1.0.
4. PPSDQxxx models have Quik Guard coating; PPSDxxx models have yellow zinc coating.

C-F-2019TECHSUP ©2019 SIMPSON STRONG-TIE COMPANY INC.

CBSDQ **SHEATHING-TO-CFS** Screw

Common Application:
Wood structural panel/sheathing to cold-formed steel

Codes/Standards: ASTM C1513 compliant, ICC-ES ESR-4208

For more information, see p. 213, C-F-2019 Fastening Systems Catalog

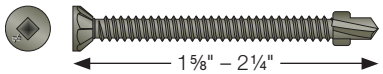

CBSDQ — Pull-Out Loads — Steel Connections

Model No.	Screw Size	Load Description	Reference Pull-Out Loads (lb.) Steel Thickness [mil (ga.)] 43 (18)	54 (16)
CBSDQ158S	#8	ASD	105	175
		LRFD	170	280
		Nominal strength	300	460
CBSDQ214S	#10	ASD	155	255
		LRFD	250	410
		Nominal strength	445	665

1. Screws and connections have been tested per AISI Standard Methods S904-17 and S905-17.
2. Values are based on cold-formed steel (CFS) members with a minimum yield strength of Fy=33 ksi and tensile strength of Fu=45 ksi for 43 mil (18 ga.), and a minimum yield strength of F_y=50 ksi and F_u=65 ksi for 54 mil (16 ga.).
3. For design purposes, steel sheet thicknesses are 0.0451 inch for 43 mil (18 ga.) and 0.0566 inch for 54 mil (16 ga.).
4. A minimum of three exposed screw threads are required to achieve the loads in the Table.

CBSDQ — Pull-Through Loads — Rated Sheathing Panels

Model No.	Screw Size	Load Description	Reference Pull-Through Loads (lb.) Minimum Nominal Panel Thickness (in.) OSB 15/32	19/32	23/32
CBSDQ158S	#8	ASD	58	63	86
		LRFD	125	135	185
		Nominal strength	290	315	430
CBSDQ214S	#10	ASD	47	47	78
		LRFD	102	102	168
		Nominal strength	235	235	390

1. The tabulated values are based on testing per AC233.
2. ASD pull-through loads based on a factor of safety of five applied to the nominal strength value (C_D=1.0, increases to C_D=1.6 allowed when applicable).
3. LRFD load based on adjustment of ASD load per NDS 2018 Appendix N using K_F = 3.32, Φ_z= 0.65, and λ = 1.0.

C-F-2019TECHSUP ©2019 SIMPSON STRONG-TIE COMPANY INC.

High-performance sheathing-to-CFS connections.

Strong-Drive® PPSD SHEATHING-TO-CFS Screw

CFS Systems

CFS Systems

PPSD/CBSDQ/FHSD/WSFLRV Screws 146
DWF/DWFSD Screws 148
PHSD/FPHSD Screws 149

PPSD/CBSDQ/FHSD/WSFLRV Screws

For More Product Information:

- Strong-Drive® PPSD Sheathing-to-CFS screw: see pp. 94 and 209, C-F-2019
- CBSDQ Sheathing screw: see p. 213, C-F-2019
- FHSD Wood-to-CFS screw: see p. 215, C-F-2019
- WSFLRV Wood-to-CFS/Aluminum screw: see p. 215, C-F-2019
- See ESR-4208 for Strong-Drive PPSD Sheathing-to-CFS and CBSDQ Sheathing screws design and installation with wood structural panels.

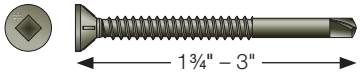

Strong-Drive® PPSD SHEATHING-TO-CFS Screw

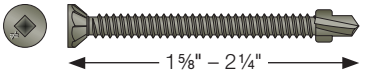

CBSDQ Sheathing-to-CFS Screw

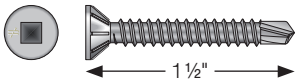

FHSD Wood-to-CFS Screw

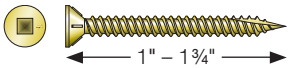

WSFLRV Wood-to-CFS/Aluminum Screw

PPSD, CBSDQ, FHSD, WSFLRV Screw[11] — Nominal Shear Strength (Rn) for Wind and Other In-Plane Loads for Shearwall (lb./ft.)

Assemble Description	Maximum Aspect Ratio (h/w)	Fastener Spacing at Panel Edges (in.)			
		6	4	3	2
15/32" structural 1 sheathing (4 ply), one side	2:1	1,065[3]	—	—	—
7/16" rated sheathing (OSB), one side	2:1	910[3]	1,410	1,735	1,910
7/16" rated sheathing (OSB), one side oriented perpendicular to framing	2:1	1,020	—	—	—
7/16" rated sheathing (OSB), one side	2:1[5]	—	1,025	1,425	1,825

1. Nominal strength shall be multiplied by the resistance factor (ϕ = 0.65) to determine the design strength or divided by the safety factor (Ω = 2.0) to determine the allowable strength.
2. Screws in the field of the panel shall be installed 12" (305 mm) on center (o.c.).
3. Where fully blocked gypsum board is applied to the opposite side of this assembly, per Table C2.1-2 AISI S213 Standard *North American Standard for Cold-Formed Steel Framing — Lateral Design 2018 Edition with Supplement No. 1 and Commentary* with screw spacing at 7" (178 mm) o.c. edge and 7" (178 mm) o.c. field, these nominal strengths are permitted to be increased by 30%.
4. For walls with material of the same type and nominal strength applied to opposite faces of the same wall, the available strength of material of same capacity is cumulative. Where the material nominal strengths are not equal, the available strength shall be either two times the available strength of the material with the smaller value or shall be taken as the value of the stronger side, whichever is greater. Summing the available strengths of dissimilar material applied to opposite faces or to the same wall line is not allowed.
5. Shearwall height to width aspect ratio (h/w) greater than 2:1, but not exceeding 4:1, shall be permitted provided the nominal shear strength is multiplied by 2w/h.
6. For wood structural panel sheathed shearwalls, tabulated R_n values shall be applicable for short-term load duration (wind loads). For other in-plane lateral loads of normal or permanent load duration as defined by the AWC NDS, the values in the table above for wood structural panel sheathed shearwalls shall be multiplied by 0.63 (normal) or 0.56 (permanent).
7. Maximum stud spacing 24" o.c.
8. All sheathing edges shall be attached to framing or 1½" width 33 mil blocking.
9. Table based on Table C2.1-1 AISI S213 Standard *North American Standard for Cold-Formed Steel Framing — Lateral Design 2018 Edition with Supplement No. 1 and Commentary*.
10. See General Load Table on p. 16 for screw strength.
11. #8 screws — PPSD, CBSDQ, FHSD, WSFLRV. #10 screws — FHSD.
12. Stud, track and blocking (if applicable) shall be a minimum of 33 mil.

C-F-2019TECHSUP ©2019 SIMPSON STRONG-TIE COMPANY INC.

PPSD/CBSDQ/FHSD/WSFLRV Screws (cont.)

PPSD, CBSDQ, FHSD, WSFLRV Screw[12] — Nominal Shear Strength (Rn) for Seismic and Other In-Plane Loads for Shearwall (lb./ft.)

Assemble Description	Maximum Aspect Ratio (h/w)	Fastener Spacing at Panel Edges[2] (in.)				Designation Thickness[5,6] of Stud, Track and Blocking (mil)	Required Sheathing Screw Size
		6	4	3	2		
15/32" structural 1 sheathing (4 ply), one side	2:1[3]	780	990	—	—	33 or 43	8
	2:1	890	1,330	1,775	2,190	43	10
7/16" rated sheathing (OSB), one side	2:1[3]	700	915	—	—	68	8
	2:1[3]	825	1,235	1,545	2,060	48	8
	2:1	940	1,410	1,760	2,350	54	8
	2:1	1,232	1,848	2,310	3,080	68	10

1. Nominal strength shall be multiplied by the resistance factor ($\phi = 0.60$) to determine the design strength or divided by the safety factor ($\Omega = 2.5$) to determine the allowable strength.
2. Screws in the field of the panel shall be installed 12" (305 mm) on center (o.c.).
3. Shearwall height to width aspect ratio (h/w) greater than 2:1, but not exceeding 4:1, shall be permitted provided the nominal shear strength is multiplied by 2w/h.
4. For walls with material of the same type and nominal strength applied to opposite faces of the same wall, the available strength of material of same capacity is cumulative. Where the material nominal strengths are not equal, the available strength shall be either two times the available strength of the material with the smaller value or shall be taken as the value of the stronger side, whichever is greater. Summing the available strengths of dissimilar material applied to opposite faces or to the same wall line is not allowed.
5. Substitution of a stud or track of a different designation thickness is not permitted
6. Wall studs and track shall be of ASTM A1003 Structural Grade 33 (Grade 230) Type H steel for members with a designation thickness of 33 and 43 mil, and A1003 Structural Grade 50 (Grade 340) Type H steel for members with a designation thickness equal to greater than 54 mil.
7. For wood structural panel sheathed shearwalls, tabulated Rn values shall be applicable for short-term load duration (seismic loads). For other in-plane lateral loads of normal or permanent load duration as defined by the AF&PA NDS, the values in the table above for wood structural panel sheathed shearwalls shall be multiplied by 0.63 (normal) or 0.56 (permanent).
8. Maximum stud spacing 24" o.c.
9. All sheathing edges shall be attached to framing or 1½" width 33 mil blocking.
10. Table based on Table C2.1-3 AISI S213 Standard *North American Standard for Cold-Formed Steel Framing — Lateral Design 2018 Edition with Supplement No. 1 and Commentary*.
11. See General Load Table on p. 16 for screw strength.
12. #8 screws — PPSD, CBSDQ, FHSD, WSFLRV. #10 screws — FHSD.

C-F-2019TECHSUP ©2019 SIMPSON STRONG-TIE COMPANY INC.

DWF/DWFSD Screws

For more information, see p. 214, C-F-2019 Fastening Systems Catalog

DWF Drywall-to-CFS Screw

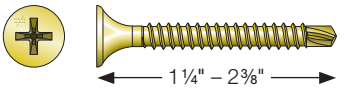

DWFSD Drywall-to-CFS Screw

Nominal Shear Strength (R_n) for Wind and Seismic Loads Shearwalls (Wind and Seismic Loads) Faced with ½" Gypsum Board (lb./ft.)

Assembly Description	Max. Aspect Ratio (h/w)	Fastener Spacing at Panel Edges/Field (in.)			
		7/7	4/4	4/12	8/12
½" gypsum board on one side of wall; steel studs max. 24" o.c.	2:1	290	425	295	230

1. Nominal strength shall be multiplied by the resistance factor (ϕ = 0.6 LRFD Seismic, ϕ = 0.65 LRFD Wind) to determine design strength or divided by the safety factor (Ω = 2.5 ASD Seismic, Ω = 2.0 ASD Wind) to determine allowable strength.
2. For gypsum sheathed shearwalls, tabulated values shall be applicable for short-term load duration only (wind or seismic loads).
3. Gypsum board shall comply with ASTM C1396.
4. Gypsum board shall be applied horizontal with 33 mil strap blocking of 1½" width, In addition, solid blocking is required between the first two end studs. Alternatively, sheets may be applied vertically or values can be multiplied by 0.35.
5. Studs and track shall be a minimum thickness of 33 mil.
6. Table based on Table C2.1-2 AISI S213 Standard *North American Standard for Cold-Formed Steel Framing — Lateral Design 2007 Edition with Supplement No. 1 and Commentary*.

C-F-2019TECHSUP ©2019 SIMPSON STRONG-TIE COMPANY INC.

PHSD/FPHSD Screws

For more information, see p. 208, C-F-2019 Fastening Systems Catalog

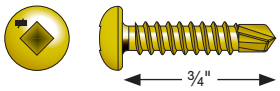

Strong-Drive® PHSD FRAMING-TO-CFS Screw

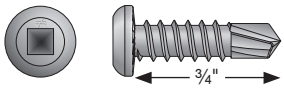

Strong-Drive® FPHSD FRAMING-TO-CFS Screw

PHSD (#8) Screw — (Sheet-Steel Sheathing to CFS) Nominal Shear Strength (R_n) for Wind (W) and Seismic (S) for Shearwalls[1] (lb./ft.)

Assembly Description	Max. Aspect Ratio (h/w)	Fastener Spacing at Panel Edges[2] (in.)				Designation Thickness[5] of Stud, Track and Blocking[7] (mil)
		6	4	3	2	
0.018" sheet steel, one side	2:1	485 (W) 390 (S)	—	—	—	33 (min.)
0.027" sheet steel, one side	4:1	—	1,000	1,085	1,170	43 (min.)
	2:1[3]	647	710	778	845	33 (min.)
0.018" sheet steel, both sides	2:1	970 (W) 780 (S)	—	—	—	33 (min.)
0.027" sheet steel, both sides	4:1	—	2,000	2,170	2,340	43 (min.)
	2:1[3]	1,294	1,420	1,556	1,690	33 (min.)

1. Nominal strength shall be multiplied by the resistance factor (ϕ = 0.6, LRFD Seismic, ϕ = 0.65, LRFD Wind) to determine design strength or divided by the safety factor (Ω = 2.5, ASD Seismic, Ω = 2.0, ASD Wind) to determine allowable strength.
2. Screws in the field of the panel shall be installed 12" (305 mm) on center (o.c.).
3. Shearwall height-to-width aspect ratio (h/w) greater than 2:1, but not exceeding 4:1, shall be permitted provided the nominal strength values are multiplied by 2w/h.
4. Wall studs and track shall be of ASTM A1003 Structural Grade 33 (Grade 230) Type H steel for members with a designation thickness of 33 and 43 mil.
5. In lieu of blocking, panel edges shall be permitted to be overlapped and attached to each other with screw spacing as required for panel edges. Where such a connection is used, tabulated design values shall be reduced 30%.
6. Maximum stud spacing 24" o.c.
7. Blocking, if applicable, shall be a minimum 33 mil, 1½" width.
8. Table based on Table C2.1-1 AISI S213 Standard *North American Standard for Cold-Formed Steel Framing — Lateral Design 2007 Edition with Supplement No. 1 and Commentary*.

FPHSD (#10) Screw — (Sheet-Steel Sheathing to CFS) Nominal Shear Strength (R_n) for Wind (W) and Seismic (S) for Shearwalls[1] (lb./ft.)

Assembly Description	Max. Aspect Ratio (h/w)	Fastener Spacing at Panel Edges[2] (in.)				Designation Thickness[5] of Stud, Track and Blocking[7] (mil)
		6	4	3	2	
0.018" sheet steel, one side	2:1	485 (W) 390 (S)	—	—	—	33 (min.)
0.027" sheet steel, one side	4:1	—	1,000	1,085	1,170	43 (min.)
	2:1[3]	647	710	778	845	33 (min.)
0.018" sheet steel, both sides	2:1	970 (W) 780 (S)	—	—	—	33 (min.)
0.027" sheet steel, both sides	4:1	—	2,000	2,170	2,340	43 (min.)
	2:1[3]	1,294	1,420	1,556	1,690	33 (min.)

1. Nominal strength shall be multiplied by the resistance factor (ϕ = 0.6, LRFD Seismic, ϕ = 0.65, LRFD Wind) to determine design strength or divided by the safety factor (Ω = 2.5, ASD Seismic, Ω = 2.0, ASD Wind) to determine allowable strength.
2. Screws in the field of the panel shall be installed 12" (305 mm) on center (o.c.).
3. Shearwall height-to-width aspect ratio (h/w) greater than 2:1, but not exceeding 4:1, shall be permitted provided the nominal strength values are multiplied by 2w/h.
4. Wall studs and track shall be of ASTM A1003 Structural Grade 33 (Grade 230) Type H steel for members with a designation thickness of 33 and 43 mil.
5. In lieu of blocking, panel edges shall be permitted to be overlapped and attached to each other with screw spacing as required for panel edges. Where such a connection is used, tabulated design values shall be reduced 30%.
6. Maximum stud spacing 24" o.c.
7. Blocking, if applicable, shall be a minimum 33 mil 1½" width.
8. Table based on Table C2.1-1 AISI S213 Standard *North American Standard for Cold-Formed Steel Framing — Lateral Design 2007 Edition with Supplement No. 1 and Commentary*.

C-F-2019TECHSUP ©2019 SIMPSON STRONG-TIE COMPANY INC.

Strong-Drive® XL LARGE-HEAD METAL Screw

Maximize load values for metal-to-metal fastening.

General Metal-to-Metal Fastening

CFS Connections

PC Screws 152
Strong-Drive® PHSD FRAMING-TO-CFS Screw 153
Strong-Drive® FPHSD FRAMING-TO-CFS Screw 153
Strong-Drive® XE EXTERIOR STRUCTURAL METAL Screw . 154
Strong-Drive® SELF-DRILLING X METAL Screw 155
Self-Drilling E Metal Screw 157

Steel Deck

Steel-Deck Fastening 158
Steel-Deck Diaphragm Calculator 159
Strong-Drive® XL LARGE-HEAD and
XM MEDIUM-HEAD METAL Screws 160

PC Screws

For more information, see p. 205, C-F-2019 Fastening Systems Catalog

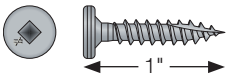

Cold-Formed Steel (CFS) Member Connection Loads

Size (in.)	Model No.	Nominal Dia.[7] (in.)	Load Description	Reference Shear (lb.) Steel Thickness: [mil (ga.)]						Reference Pull-Over (lb.) Steel Thickness: [mil (ga.)]						Reference Pull-Out (lb.) Steel Thickness: [mil (ga.)]						
				27 (22)	33 (20)	43 (18)	54 (16)	68 (14)	97 (12)	27 (22)	33 (20)	43 (18)	54 (16)	68 (14)	97 (12)	22 (24)	27 (22)	33 (20)	43 (18)	54 (16)	68 (14)	97 (12)
Pancake-Head Screw — Metal Roofing to Wood (or light-gauge CFS)																						
#10-12 x 1	PC1BS1012	0.190	ASD[2]	290	345	—	—	—	—	170	255	475	—	—	—	—	—	106	136	—	—	—
			Nominal load[4]	660	785					475	765	1,195						265	335			

1. Screws and screw connections have been tested per AISI Standard Test Method S904 and S905.
2. The tabulated ASD loads for cold-formed steel (CFS) members are based on the lower of the screw strength or the strength of the screw in the connected members per AISI S100.
3. The safety factor is based on AISI S100 for tested connections.
4. The nominal load values listed are achieved under laboratory conditions and should not be used for design loads.
5. Values are based on CFS members with a minimum yield strength of F_y = 33 ksi and tensile strength of F_u = 45 ksi for 43 mil (18 ga.) to 27 mil (22 ga.), minimum yield strength of F_y = 50 ksi and tensile strength of F_u = 65 ksi for 22 mil (24 ga.), and a minimum yield strength of F_y = 50 ksi and F_u = 65 ksi for 54 mil (16 ga.) and thicker.
6. For design purposes, steel sheet thicknesses are 0.0227" for 22 mil, 0.283" for 27 mil, 0.0346" for 33 mil, 0.0451" for 43 mil, 0.0566" for 54 mil, 0.0713" for 68 mil, and 0.1017" for 97 mil. The actual sheet thickness shall not be less than 95% of these design thicknesses as specified in AISI S100.
7. Screw diameters per AISI S200 General Provision Commentary Table D1.1.
8. Minimum required screw length is the lesser of ¾" or the minimum length required for the screw to extend through the steel connection a minimum of three exposed threads per AISI S200 General Provisions Standard Section D1.3.
9. Larger of screw head or washer diameter, d_W, for #10 and #12 screws is 0.375".
10. The allowable load (ASD) values shown are not permitted to be increased for short-duration loads such as wind or earthquake loads.
11. The lower of the Pull-Over and Pull-Out allowable load should be used for tension design.
12. The tabulated shear values are based on the thinner steel member in connection. Steel thickness for both members must be in the range of 12–22 gauge.

Wood Member Connection Withdrawal Loads

Size (in.)	Model No.	Nominal Diameter[5] (in.)	Load Description	Reference Withdrawal (lb.) Plywood ½"	Plywood ⅝"	Plywood ¾"	OSB 7/16"	OSB ¾"	SYP 2x
Pancake Head Screw — Metal Roofing to Wood									
#10-12 x 1	PC1BS1012	0.190	Allowable load[1,2]	55	55	60	33	51	117
			Average ultimate load[3]	275	275	300	165	255	585

1. Values based on the lower screw strength or strength of the screw in the connected members.
2. The tabulated allowable loads for wood members are based on factor of safety of 5 as specified in AC233, and C_D=1.0. Values may be multiplied by C_D=1.6 for wind or earthquake.
3. The average ultimate loads are achieved under laboratory conditions and should not be used for design purposes.
4. Screw diameters per AISI S200 General Provisons Commentary Table D1-1.
5. See p. 16 for information on screw strength.

C-F-2019TECHSUP ©2019 SIMPSON STRONG-TIE COMPANY INC.

Strong-Drive® PHSD FRAMING-TO-CFS Screw

Common Applications:

- Cold-formed steel framing and sheet-steel sheathing to cold-formed steel

Codes/Standards: ASTM C1513 compliant

For more information, see p. 208, C-F-2019 Fastening Systems Catalog

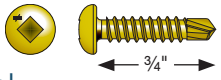

PHSD Screw — Cold-Formed Steel Member Connection Loads, Steel to Steel

Size (in.)	Model No.	Nominal Dia. (in.)	Load Description	Reference Shear (lb.)			Reference Pull-Over (lb.)			Reference Pull-Out (lb.)		
				Steel Thickness: [mil (ga.)]			Steel Thickness: [mil (ga.)]			Steel Thickness: [mil (ga.)]		
				27 (22)	33 (20)	43 (18)	27 (22)	33 (20)	43 (18)	27 (22)	33 (20)	43 (18)
#8-18 x ¾	PHSD34S0818	0.164	ASD load	181	235	305	220	345	390	67	125	133
			LRFD load	290	375	490	350	550	620	107	200	213
			Nominal strength	410	590	765	540	845	955	164	310	325

1. Screws and screw connections have been tested per AISI Standard Test Method S904 and S905. This screw is not recommended for 16 gauge and thicker steel. Provide a ⅛" diameter predrilled hole in 16 gauge and thicker steel, if this screw should be used.
2. The tabulated ASD and LRFD allowable loads for cold-formed steel (CFS) members are based on the lower of the screw strength or the strength of the screw in the connected members per AISI S100.
3. The safety factor is based on AISI S100-07.
4. The average ultimate/nominal values listed should not be used for design loads.
5. Values are based on CFS members with a minimum yield strength of F_y = 33 ksi and tensile strength of F_u = 45 ksi for 43 mil (18 ga.) to 27 mil (22 ga.), minimum yield strength of F_y = 50 ksi and F_u = 65 ksi for 54 mil (16 ga.) to 97 mil (12 ga.).
6. For design purposes, steel-sheet thicknesses are 0.0283" for 27 mil, 0.0346" for 33 mil, 0.0451" for 43 mil, 0.0566" for 54 mil, 0.0713" for 68 mil, and 0.1017" for 97 mil. The actual sheet thickness shall not be less than 95% of these design thicknesses as specified in AISI S100.
7. Screw diameters per AISI S200 General Provision Commentary Table D1.1.
8. Minimum required screw length is the lesser of ¾" or the minimum length required for the screw to extend through the steel connection a minimum of three exposed threads per AISI S200 General Provisions Standard Section D1.3.
9. Screw head or washer diameter, d_w is 0.307".
10. The allowable load (ASD) values shown are not permitted to be increased for short-duration loads such as wind or earthquake loads.
11. The lower of the pull-over and pull-out allowable load should be used for tension design.
12. The tabulated shear values are based on the thinner steel member in connection. Steel thickness for both members must be in the range of 12–22 gauge.
13. See general load tables on p. 16 for screw strength.

Strong-Drive® FPHSD FRAMING-TO-CFS Screw

Common Application:

Cold-formed steel framing and sheet-steel sheathing to cold-formed steel

Codes/Standards: ASTM C1513 compliant, ICC-ES ESR-3006

For more information, see pp. 95 and 208, C-F-2019 Fastening Systems Catalog

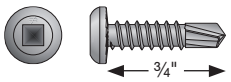

FPHSD — Cold-Formed Steel Member Connection Loads, Steel to Steel

Size (in.)	Model No.	Nominal Dia. (in.)	Load Description	Reference Shear (lb.)						Reference Pull-Over (lb.)						Reference Pull-Out (lb.)					
				Steel Thickness: [mil (ga.)]						Steel Thickness: [mil (ga.)]						Steel Thickness: [mil (ga.)]					
				27 (22)	33 (20)	43 (18)	54 (16)	68 (14)	97 (12)	27 (22)	33 (20)	43 (18)	54 (16)	68 (14)	97 (12)	27 (22)	33 (20)	43 (18)	54 (16)	68 (14)	97 (12)
#10-16 x ¾	FPHSD34S1016	0.190	ASD load	175	235	380	570	570	570	280	365	485	695	740	740	76	95	156	240	340	505
			LRFD load	280	375	605	855	855	855	445	585	775	1,110	1,110	1,110	123	151	250	380	545	805
			Nominal strength	395	535	860	1,305	1,305	1,305	685	895	1,190	1,705	2,215	2,215	190	230	385	585	840	1,235
#12-14 x ¾	FPHSD34S1214	0.216	ASD load	205	260	410	610	610	610	240	330	430	630	840	1,125	76	95	159	240	345	530
			LRFD load	330	420	650	975	975	975	390	530	685	1,005	1,340	1,690	123	151	255	385	550	855
			Nominal strength	485	610	930	1,385	1,385	1,385	595z	815	1,050	1,540	2,060	2,065	190	230	390	590	845	1,295

1. Screws and connections have been tested per AISI Standard Method S904 and S905.
2. The tabulated ASD and LRFD allowable loads for cold-formed steel (CFS) members are based on the lower of the screw strength or the strength of the screw in the connected members per AISI S100.
3. Values are based on CFS members with a minimum yield strength of F_y = 33 ksi and tensile strength of F_u = 45 ksi for 43 mil (18 ga.) to 27 mil (22 ga.), minimum yield strength of F_y = 50 ksi and F_u = 65 ksi for 54 mil (16 ga.) to 97 mil (12 ga.).
4. For design purposes, steel sheet thicknesses are 0.0283" for 27 mil, 0.0346" for 33 mil, 0.0451" for 43 mil, 0.0566" for 54 mil, 0.0713" for 68 mil, and 0.1017" for 97 mil. The actual sheet thickness shall not be less than 95% of these design thicknesses as specified in AISI S100.
5. Screw diameters per AISI S200 General Provision Commentary Table D1.1.
6. Minimum required screw length is the lesser of ¾" or the minimum length required for the screw to extend through the steel connection a minimum of three exposed threads per AISI S200 General Provisions Standard Section D1.3.
7. Screw head d_w for #10 and #12 screws is 0.357".
8. The allowable load (ASD) values shown are not permitted to be increased for short-duration loads such as wind or earthquake loads.
9. The lower of the pull-over and pull-out allowable load should be used for tension design.
10. The tabulated shear values are based on the thinner steel member in connection. Steel thickness for both members must be in the range of 12–22 gauge.
11. See the general load tables on p. 16 for screw strength.

C-F-2019TECHSUP ©2019 SIMPSON STRONG-TIE COMPANY INC.

Strong-Drive® XE EXTERIOR STRUCTURAL METAL Screw

Structural Metal Connectors

For more information, see p. 92, C-F-2019 Fastening Systems Catalog

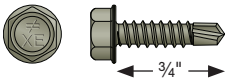

Cold-Formed Steel Member Connection Loads, Steel to Steel

Size (in.)	Model No.	Nominal Dia. d (in.)	Washer Dia. d_w (in.)	Load Description	Reference Shear (lb.) Steel Thickness: [mil (ga.)]						Reference Pull-Over (lb.) Steel Thickness: [mil (ga.)]						Reference Pull-Out (lb.) Steel Thickness: [mil (ga.)]					
					27 (22)	33 (20)	43 (18)	54 (16)	68 (14)	97 (12)	27 (22)	33 (20)	43 (18)	54 (16)	68 (14)	97 (12)	27 (22)	33 (20)	43 (18)	54 (16)	68 (14)	97 (12)
#10 x ¾	XEQ34B1016	0.19	0.4	Allowable strength (ASD)	182	235	365	465	465	465	330	425	605	785	785	785	64	95	128	226	306	501
				Design strength (LRFD)	292	375	585	695	695	695	525	675	970	1,175	1,175	1,175	103	152	205	361	490	801
				Nominal strength	423	535	830	1,290	1,290	1,290	805	1,035	1,485	2,065	2,065	2,065	167	234	348	555	750	1,225

1. Screws and their connections have been tested per AISI Standard Test Method S904 and S905.
2. Loads are based on cold-formed steel members with a minimum yield strength, F_y = 33 ksi and tensile strength, F_u = 45 ksi for 43 mil (18 ga.) and thinner, and a minimum yield strength, F_y = 50 ksi and tensile strength, F_u = 65 ksi for 54 mil (16 ga.) and thicker.
3. Screws shall extend through the connection with a minimum of three exposed threads per AISI General Provisions Standard Section D1.3.

Screw Strength

Size (in.)	Nominal Strength		Design Strength (LRFD) ϕ = 0.5 (lb.)		Allowable Strength (ASD) Ω = 3.0 (lb.)	
	P_{ss}	P_{ts}	ϕP_{ss}	ϕP_{ts}	P_{ss}/Ω	P_{ts}/Ω
#10 x ¾	1,390	2,350	695	1,175	465	785

P_{ss} — Shear strength
P_{ts} — Tensile strength

Allowable Loads for Connectors in Trex Elevations

Model No.	Length (in.)	Fasteners	Allowable Loads (lb.) (F1)	
			43 mil (18 ga.)	68 mil (14 ga.)
L70Z	7	(8) #10	935	1,265
LS70Z	6⅜	(10) #10	600	1,070

1. Loads are for one part only.
2. Loads are for 8" headers/joists.
3. F1 load refers to the download or the uplift loads acting along the web of the joist/header.

C-F-2019TECHSUP ©2019 SIMPSON STRONG-TIE COMPANY INC.

Strong-Drive®
SELF-DRILLING X METAL Screw

Common Application:
Steel decking-to-structural steel cold-formed steel framing and steel stitching

Codes/Standards: ICC-ES ESR-3006, City of LA RR25670 and RR25917, RR26009, ASTM C1513 compliant, IAPMO UES ER326, FM Approval #3045651, SDI DDM03, Appendix VII, SDI DDM04, State of Florida FL16937

For more information, see pp. 92 and 211, C-F-2019 Fastening Systems Catalog

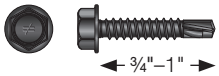

X Metal Screw — Cold-Formed Steel Connection Loads

Size (in.)	Model No.	Nominal Dia. (in.)[7]	Load Description	Reference Shear (lb.)						Reference Pull-Over (lb.)						Reference Pull-Out (lb.)					
				Steel Thickness: [mil (ga.)]						Steel Thickness: [mil (ga.)]						Steel Thickness: [mil (ga.)]					
				27	33	43	54	68	97	27	33	43	54	68	97	27	33	43	54	68	97
				(22)	(20)	(18)	(16)	(14)	(12)	(22)	(20)	(18)	(16)	(14)	(12)	(22)	(20)	(18)	(16)	(14)	(12)
#10-16 x ¾	X34B1016	0.190	ASD	175	235	360	540	540	540	330	400	475	645	925	975	71	87	129	200	270	445
#10-16 x 1	XQ1S1016 X1S1016		LRFD	280	375	570	810	810	810	525	640	755	1,035	1,465	1,465	114	139	205	320	430	715
			Nominal strength	400	535	815	1,290	1,290	1,290	805	990	1,160	1,585	2,260	2,695	174	215	315	490	660	1,095
#12-14 x 1	XQ1S1214 X1S1214	0.216	ASD	176	235	385	595	840	840	295	375	525	785	1,045	1,210	74	96	147	215	325	500
			LRFD	280	375	610	950	1,265	1,265	470	600	835	1,255	1,670	1,875	117	154	235	340	520	795
			Nominal strength	400	535	870	1,350	2,135	2,135	720	920	1,285	1,925	2,565	2,965	180	235	360	520	800	1,220

1. Screws and screw connections have been tested per AISI Standard Test Method S904 and S905 with the exception of 22-gauge values which are based on calculations of the AISI S100.
2. The tabulated ASD and LRFD allowable loads for cold-formed steel (CFS) members are based on the lower of the screw strength or the strength of the screw in the connected members per AISI S100.
3. The safety factor Ω and resistance factor ϕ used to determine the ASD and LRFD strength are based on AISI S100.
4. The nominal strength values listed are achieved under laboratory conditions and should not be used for design loads.
5. Values are based on CFS members with a minimum yield strength of F_y = 33 ksi and tensile strength of F_u = 45 ksi for 43 mil (18 ga.) to 27 mil (22 ga.), minimum yield strength of F_y = 50 ksi and F_u = 65 ksi for 54 mil (16 ga.) to 97 mil (12 ga.), and a minimum yield strength of F_y = 36 ksi and F_u = 58 ksi for ⅛" and thicker.
6. For design purposes, steel-sheet thicknesses are 0.0283" for 27 mil, 0.0346" for 33 mil, 0.0451" for 43 mil, 0.0566" for 54 mil, 0.0713" for 68 mil, and 0.1017" for 97 mil. The actual sheet thickness shall not be less than 95% of these design thicknesses as specified in AISI S100.
7. Screw diameters per AISI S200 General Provisions Commentary Table D1-1.
8. Minimum required screw length is the lesser of ¾" or the minimum length required for the screw to extend through the steel connection a minimum of three exposed threads per 2004 AISI General Provisions Standard section D1.3.
9. Screw head or washer diameter, dw, for #10 and #12 screws is 0.398".
10. The allowable load (ASD) values showing are not permitted to be increased for short duration loads such as wind or earthquake loads.
11. The lower of the pull-over and pull-out allowable load should be used for tension design.
12. The tabulated shear values are based on the thinner steel member in connection. Steel thickness for both member must be in the range of ½"–22 gauge.
13. The XQ-S1224 screws are recommended for 16 gauge and thicker steel.

C-F-2019TECHSUP ©2019 SIMPSON STRONG-TIE COMPANY INC.

Strong-Drive® SELF-DRILLING X METAL Screw (cont.)

Load Tables and Technical Data (Model Numbers: XU34B1016, XU34S1016)

The following tables provide screw properties and load information for the Simpson Strong-Tie Self-Drilling X Metal Screws (Model Numbers: XU34B1016-5K, XU34S1016.) The loads are based on testing in accordance with AISI S904-08, *Standard Test Methods* and AISI S905-08, *Test Methods for Mechanically Fastened Cold-Formed Steel Connections*. These values are provided for use in designing cold-formed steel connections.

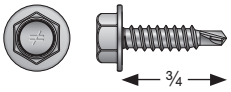

Screw Properties and Strengths

Model No.		Coating	Size	Length (in.)	Nom. Dia. (in.)	Washer Dia. (in.)	Point Size	Drill-Through Thickness[11] (in.)	Nominal Strength (lb.)		Design Strength (LRFD) (lb.), Φ = 0.5		Allowable Strength (ASD) (lb.), Ω = 3.0	
Bulk (5000 ct.)	Collated[12]								P_{ss}	P_{ts}	ΦP_{ss}	ΦP_{ts}	P_{ss}/Ω	P_{ts}/Ω
XU34B1016-5K	XU34S1016	Clear Zinc	#10–16	¾	0.19	0.475	1	0.030-0.110	1,735	2,895	870	1,450	580	965

Cold-Formed Steel Connection Loads

Model No.	Load Description	Reference Shear (lb.)						Reference Pull-Over (lb.)						Reference Pull-Out (lb.)					
		Steel Thickness: [mil (ga.)]						Steel Thickness: [mil (ga.)]						Steel Thickness: [mil (ga.)]					
		27	33	43	54	68	97	27	33	43	54	68	97	27	33	43	54	68	97
		(22)	(20)	(18)	(16)	(14)	(12)	(22)	(20)	(18)	(16)	(14)	(12)	(22)	(20)	(18)	(16)	(14)	(12)
XU34B1016-5K XU34S1016	ASD	255	290	480	—	—	—	435	530	640	—	—	—	100	125	155	210[9]	400[9]	—
	LRFD	410	465	765	—	—	—	690	845	1,025	—	—	—	160	200	250	320[9]	640[9]	—
	Nom. Strength	580	700	1,085	—	—	—	1,060	1,310	1,570	—	—	—	247	310	395	635[9]	985[9]	—

1. P_{ss} is the nominal shear strength of the screw and P_{ts} is the nominal tensile strength of the screw.
2. The safety factor Ω and resistance factor Φ are calculated based on AISI S100-07 Chapter F for tested connections.
3. The nominal strength values listed are achieved under laboratory conditions and should not be used for design loads.
4. Values are based on CFS members with a minimum yield strength of F_y = 33 ksi and tensile strength of F_u = 45 ksi for 43 mil (18 ga.) to 27 mil (22 ga.) and minimum yield strength of F_y = 50 ksi and F_u = 65 ksi for 54 mil (16 ga.) to 97 mil (12 ga.).
5. For design purposes, steel sheet thicknesses are 0.0283" for 27 mil, 0.0346" for 33 mil, 0.0451" for 43 mil, 0.0566" for 54 mil, 0.0713" for 68 mil, and 0.1017" for 97 mil. The actual sheet thickness shall not be less than 95% of these design thicknesses as specified in AISI S100-07 Section A2.4.
6. Screws must extend through the steel connection a minimum of 3 exposed threads per AISI General Provisions Standard Section D1.3.
7. The lower of the pull-over and pull-out load should be used for tension design.
8. The tabulated values are based on the thinner steel member in the connection.
9. Pull-Out values for the XU34B1016 and XU34S1016 with 54 mil and 68 mil steel thicknesses are provided for conditions in which the member in contact with the screw head is thinner than the 54 or 68 mil base material and the total material thickness is less than the 0.110". Use the thickness of the member in contact with the screw head to determine Pull-Over value and the base member thickness (member not in contact with screw head) to determine the Pull-Out value.
10. The allowable load (ASD) values shown are not permitted to be increased for short-duration loads such as wind or earthquake loads.
11. Drill-through thickness is the recommended minimum and maximum thickness of the total assembly. This includes thickness of all the members, including the gaps between them.
12. Collated screw models are designed for use with the Quik Drive® system.

C-F-2019TECHSUP ©2019 SIMPSON STRONG-TIE COMPANY INC.

Self-Drilling E Metal Screw

Common Application:
Cold-formed steel framing

- Recommended for use with certain Simpson Strong-Tie® connectors
- #3 drill point (Max. total drilling thickness 0.35")

Codes/Standards: ASTM C1513 compliant

For more information, see p. 93, C-F-2019 Fastening Systems Catalog

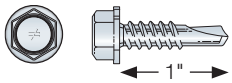

Screw Strength

Size (in.)	Model No.	Nominal Strength (lb.)		Design Strength (LRFD) (lb.) $\phi = 0.5$		Allowable Strength (ASD) (lb.) $\Omega = 3.0$	
		P_{ss}	P_{ts}	ϕP_{ss}	ϕP_{ts}	P_{ss}/Ω	P_{ts}/Ω
#14 x 1	E1B1414	3,130	5,395	1,565	2,700	1,045	1,800

Screw-to-Cold-Formed Steel Member Connection Loads, Steel to Steel

Size (in.)	Model No.	Nominal Dia. (in.)	Washer Dia. (in.)	Load Description	Reference Shear (lb.) Steel Thickness: [mil (ga.)]					Reference Pull-Over (lb.) Steel Thickness: [mil (ga.)]					Reference Pull-Out (lb.) Steel Thickness: [mil (ga.)]				
					33 (20)	43 (18)	54 (16)	68 (14)	97 (12)	33 (20)	43 (18)	54 (16)	68 (14)	97 (12)	33 (20)	43 (18)	54 (16)	68 (14)	97 (12)
#14 x 1	E1B1414	0.242	0.5	ASD	200	295	605	850	1,045	390	505	920	1,160	1,655	105	140	250	320	455
				LRFD	300	445	905	1,280	1,565	585	760	1,380	1,740	2,480	160	210	380	480	680
				Nominal strength	600	890	1,810	2,555	3,130	1,170	1,520	2,760	3,475	4,960	320	415	755	955	1,360

1. Screws shall extend through the connection with a minimum of three exposed threads per AISI General Provisions Standard Section D1.3.
2. Tabulated loads are based on calculations per AISI S100 using the thinner steel member in the connection. A safety factor of $\Omega = 3.0$ and resistance factor $\phi = 0.5$ were used to determine the ASD and LRFD strength values.
3. Loads are based on cold-formed steel members with a minimum yield strength, F_y, of 33 ksi and tensile strength, F_u, of 45 ksi for 43 mil (18 ga.) and thinner, and a minimum yield strength of 50 ksi and tensile strength of 65 ksi for 54 mil (16 ga.) and thicker.

C-F-2019TECHSUP ©2019 SIMPSON STRONG-TIE COMPANY INC.

Steel-Deck Fastening

Steel decks may be classified into roof decks, form decks and composite decks. The primary purpose of these decks is to support vertical loads, but they can also be used as a horizontal diaphragm to resist lateral loads from wind or earthquake forces. The strength of the diaphragm can be limited by fastener connection strength, local panel buckling, or even plate buckling of the entire diaphragm.

Steel-deck panels are available in different geometries and thicknesses and steel properties from different manufacturers. Common deck panel profiles are narrow rib (NR, commonly referred to as Type A deck), intermediate rib (IR, commonly referred to as Type F deck) and wide rib (WR, commonly referred to as Type B deck). Illustrations of these can be found in SDI publications. The SDI design recommendations are limited to deck panels that are in the thickness range of 0.014" to 0.064", and panel depths 9⁄16" to 3".

Steel-deck fastening is categorized into two groups — structural fastening and side-lap or stitch fastening. Structural fasteners connect the steel-deck panels to the structural framing, while side-lap fasteners connect the panels together along the free edges between the supports. The most important information for any steel-deck fastener is the connection strength and connection flexibility that is developed using the fastener.

Steel-Deck Fastening

Based on the deck profile, width and the design load, a structural fastening pattern and the number of side-lap fasteners or side-lap spacing can be determined. The fastening pattern provides the number of structural fasteners needed to attach the decking panel to support steel. The structural fastening pattern is given by the deck width followed by the number of fasteners. e.g., 36/7 pattern means 36"-wide panel attached with seven fasteners. The most typical fastener patterns for steel-deck profiles are shown here.

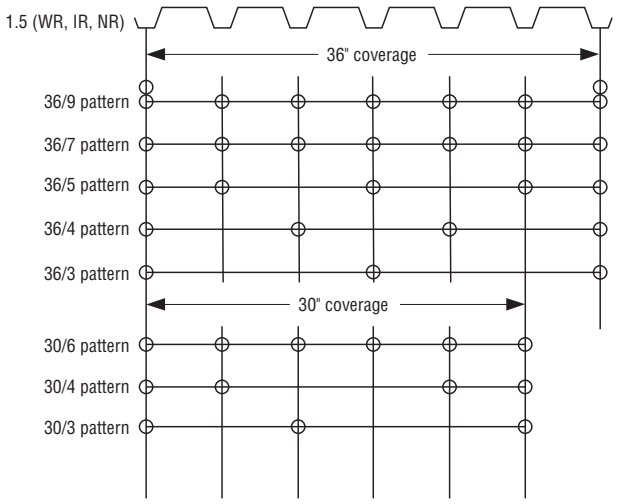

Typical Fastener Layout

(From SDI, DDM03 2004, 3rd Edition, Appendix IV; DDM04 2015, 4th Edition)

The number of side-lap fasteners required at the over-lapping panel edges are per deck span between structural supports. For example, five side laps for a 6' deck span would represent six even spaces with side-lap fasteners at 12" on center. The side-lap fastener spacing can range between 3" and 36" o.c.

Structural fastening can be done with puddle welds, power-actuated pins, or screws. Each type of fastening has its advantages and disadvantages in terms of installation cost, installation effort, capacity, energy dissipation and behavior at ultimate load. All of the fasteners would be called out in a fastener pattern using nomenclature similar to that shown in the figure.

Evaluation Reports and Approvals

Steel-deck diaphragms can be designed and constructed following code-recognized design procedures and provisions. At the same time, the codes provide for alternate design methods and materials to be recognized by the authority having jurisdiction. Some deck and fastener manufacturers have gone the alternate route and in that process have secured evaluation reports that can be used by the engineering design community for design of steel diaphragms and by the local building officials as the basis for approval. ICC-ES and IAPMO UES provide criteria that can be used to secure evaluation reports for steel-diaphragm products.

The insurance industry also has a form of compliance that it uses as the basis for risk management. Factory Mutual (FM) provides an Approval for deck products and systems as well as fasteners used for fastening the deck panels.

Simpson Strong-Tie® Steel-Deck Fasteners

Simpson Strong-Tie holds evaluation reports and FM Approvals for all of its steel-deck diaphragm fasteners. These reports and approvals are available online at no cost from the issuing agency or at **strongtie.com**.

The Simpson Strong-Tie self-tapping X metal screws have been qualified for compliance with ASTM C1513 and some of these screws are included in the SDI DDM03, Appendix VII and Appendix IX, and SDI DDM04, Section 12. In those documents, diaphragm design values are provided in tabular format for typical fastening patterns and for a range of common deck thicknesses. The SDI DDM03 and DDM04 manuals are code-referenced documents.

In addition, the strength and flexibility of connections with Simpson Strong-Tie X-series screws used in steel decks were evaluated per IAPMO UES Evaluation Criteria EC007 (2015), which is based on AISI S310, North American Standard for the Design of Profiled Steel Panels. The connection strengths and flexibilities can be used to calculate the nominal diaphragm shear strength and diaphragm stiffness per Sections 2 and 3 of SDI DDM03.

The Simpson Strong-Tie steel-deck diaphragm calculator, which is available as a web app, can be used to do the diaphragm strength and stiffness calculations, investigate alternative fastening strategies and ultimately produce the required submission documents.

The available Simpson Strong-Tie fasteners for steel-deck applications are listed on pp. 91–92 and pp. 210–211 of C-F-2019 Fastening Systems Catalog. They are available in bulk or collated forms. The collated forms are driven using Quik Drive® Systems. For more up-to-date information on steel-deck diaphragm fasteners, evaluation reports, approvals and appropriate Quik Drive tools including some products not found in the print catalog, see **strongtie.com**.

C-F-2019TECHSUP ©2019 SIMPSON STRONG-TIE COMPANY INC.

Steel-Deck Diaphragm Calculator

The Steel-Deck Diaphragm Calculator web app offers optimized steel-deck design solutions based on fastener and labor costs for a given shear and uplift. It can provide calculations for any solution generated. Generate diaphragm tables for various roof and floor decks using Simpson Strong-Tie® fasteners. The app can also generate a submittal package that includes fastener information, code reports, Factory Mutual reports, Appendix VII and IX of DDM03 (also reference DDM04), coating information and tools for installation. The app is accessible from any web browser and does not require downloading or installing special software.

Users can:

- Design for multiple zones and develop solutions in either ASD or LRFD
- Modify deck properties from the standard properties listed in SDI DDM03 and DDM04
- Generate multiple cost- and labor-optimized solutions with calculations included
- Generate tables in Nominal, ASD Wind, LRFD Wind, ASD Seismic or LRFD Seismic
- Design for loads using the new Strong-Drive® XL Large-Head Metal screw (included in the optimization calculator)
- Design for additional structural patterns not covered in SDI literature
- Access proprietary deck tables with the new Strong-Drive® XM Medium-Head Metal screw

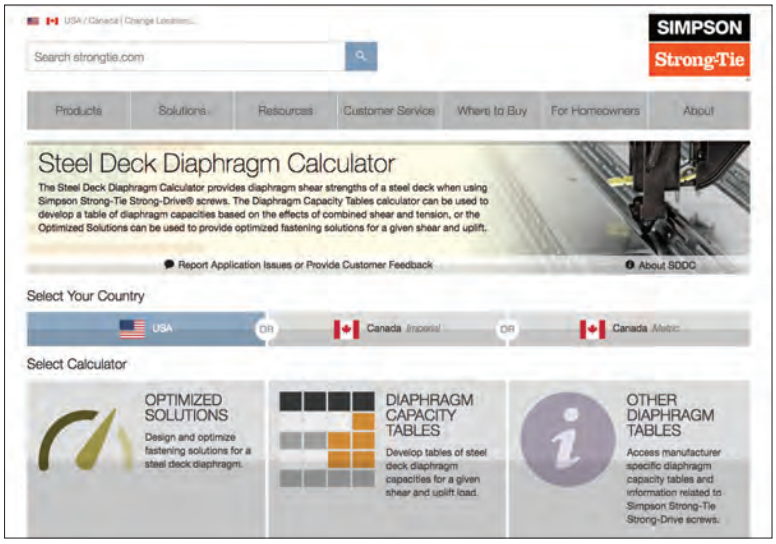

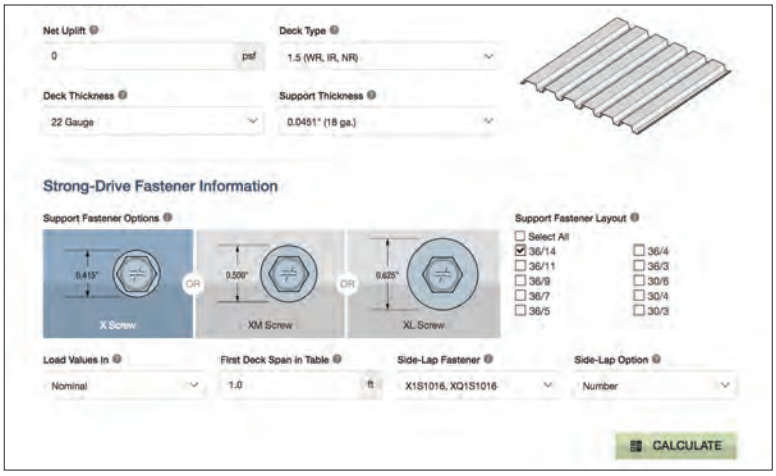

Example of Steel-Deck Diaphragm Calculator Web Application

Steel-Deck Diaphragm Load Tables for Interlocking Decks

Load tables are available on our website application for using Strong-Drive XM Medium-Head Metal screws on frequently used interlocking decks with proprietary side-lap connections.

For more information regarding Strong-Drive XM Medium-Head Metal screw shear tables, refer to **strongtie.com/diaphragmcalc**.

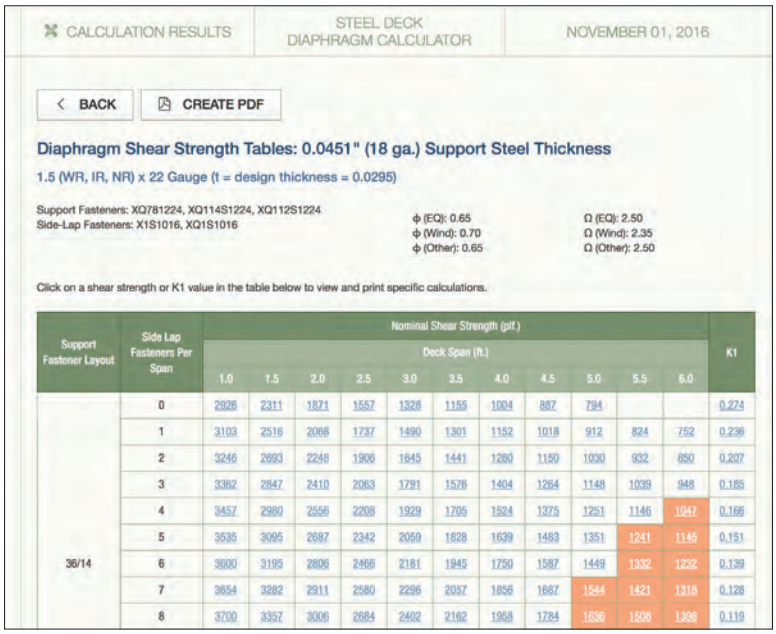

Support Fastener Layout	Side Lap Fasteners Per Span	Nominal Shear Strength (plf.) Deck Span (ft.) 1.0	1.5	2.0	2.5	3.0	3.5	4.0	4.5	5.0	5.5	6.0	K1
36/14	0	2926	2311	1871	1557	1328	1155	1004	887	794			0.274
	1	3103	2516	2068	1737	1490	1301	1152	1018	912	824	752	0.236
	2	3246	2693	2248	1906	1645	1441	1280	1150	1030	932	850	0.207
	3	3362	2847	2410	2063	1791	1578	1404	1264	1148	1039	948	0.185
	4	3457	2980	2556	2208	1929	1705	1524	1375	1251	1146	1047	0.166
	5	3535	3095	2687	2342	2059	1828	1639	1483	1351	1241	1145	0.151
	6	3600	3195	2806	2466	2181	1945	1750	1587	1449	1332	1232	0.139
	7	3654	3282	2911	2580	2296	2057	1856	1687	1544	1421	1316	0.128
	8	3700	3357	3006	2684	2402	2162	1958	1784	1636	1508	1399	0.119

Example of Steel-Deck Diaphragm Load Table for Interlocking Decks

C-F-2019TECHSUP ©2019 SIMPSON STRONG-TIE COMPANY INC.

Strong-Drive® XL LARGE-HEAD and XM MEDIUM-HEAD METAL Screws

High-Performance Screw Alternative to Welds and Pins

Strong-Drive® metal screws are load-tested and code-listed, allowing you to get the maximum load values for installation. Strong-Drive XL Large-Head Metal screws are the perfect choice when high shear or uplift resistance is required. Strong-Drive XM Medium-Head Metal screws, with their ½" washer head, are designed for narrow flutes commonly found on interlocking deck profiles. In high-strength decks (F_y= 50 ksi), these screws are excellent 1-for-1 replacements for pins. The Self-Drilling X Metal screw is your go-to screw for lighter-duty support fastening and stitching applications. These screws are available in bulk or collated for Quik Drive® steel-decking systems.

Simpson Strong-Tie provides a full offering of code-listed fasteners for your next steel-decking job.

US Patent 9,518,599

For more information, see pp. 91 and 210, C-F-2019 Fastening Systems Catalog

DDM03 APPENDIX VII, IX DDM04

IAPMO UES ER-326

FM APPROVAL
#3050714, #3045651

City of L.A. RR26009

State of Florida FL16937

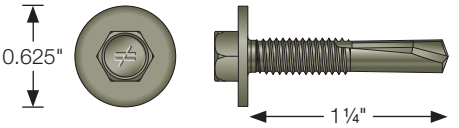

Strong-Drive XL Large-Head Metal Screw

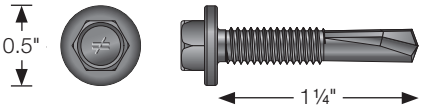

Strong-Drive XM Medium-Head Metal Screw

Strength in Numbers

Comparison testing shows that Strong-Drive XL Large-Head Metal screws and Strong-Drive XM Medium-Head Metal screws are stronger than many alternative fastener types in 33 ksi and 50 ksi steel decking.

For Standard SDI DDM03 and DDM04 Decks with F_y = 33 ksi

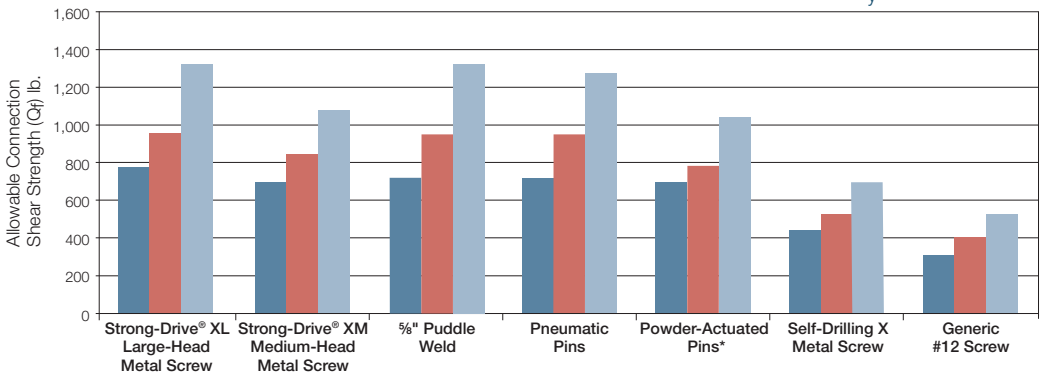

Wind Load

- 22 ga. deck
- 20 ga. deck
- 18 ga. deck

- Standard screw based on AISI Eq.
- PAF values based on SDI DDM03 and DDM04 Manuals
- Values based on ¼" support thickness
- Safety factors per DDM03 and DDM04

*Average

Fastener Type

For Proprietary Steel Decks with F_y = 50 ksi

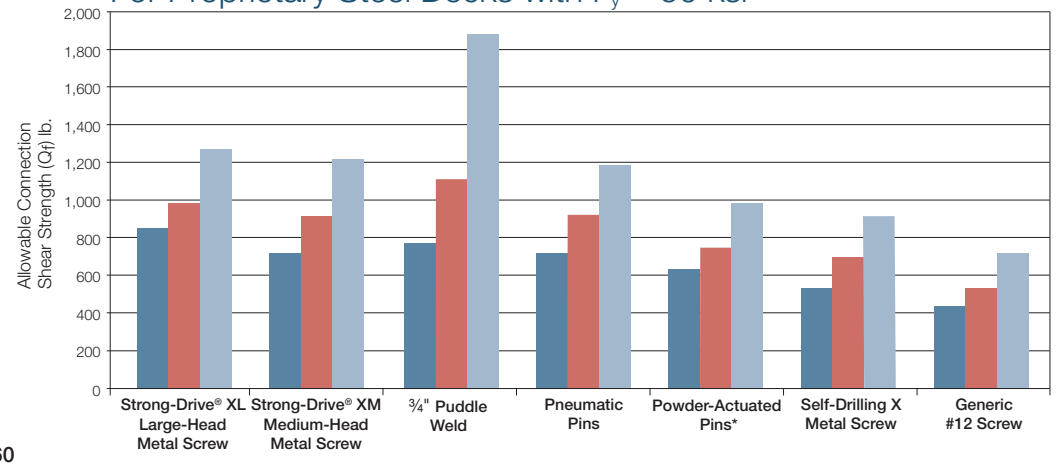

Seismic Load

- 22 ga. deck
- 20 ga. deck
- 18 ga. deck

- Standard screw based on AISI Eq.
- PAF values based on SDI DDM03 and DDM04 Manuals
- Values based on ¼" support thickness
- Safety factors per DDM03 and DDM04

*Average

C-F-2019TECHSUP ©2019 SIMPSON STRONG-TIE COMPANY INC.

Strong-Drive® XL LARGE-HEAD and XM MEDIUM-HEAD METAL Screws (cont.)

Screw Shear and Tension Strengths

Size (in.)	Model (Model No.)	Factor	Support Thickness (in.)	Nominal Shear (lb.) P_{ss}	Nominal Tension (lb.) P_{ts}	Reference Connection Shear Strength, Qf (lb.), and Flexibility, Sf (in./kip) GR33 / GR40 Deck Thickness, ga. (in.) 22 (0.0295)	20 (0.0358)	18 (0.0474)	16 (0.0598)	GR50 Deck Thickness, ga. (in.) 22 (0.0295)	20 (0.0358)	18 (0.0474)	16 (0.0598)
#12 x 1¼	XL Large-Head Metal Screw (XLQ114T1224, XLQ114B1224)	Qf	0.375	3,110	4,985	1,985	2,410	3,110	—	2,030	2,465	3,110	3,110
			0.25			1,870	2,270	3,005	3,110	2,465	2,465	3,110	3,110
			0.1875			1,790	2,170	2,875	3,110	1,945	2,360	3,110	3,110
			0.125			1,685	2,045	2,705	3,110	1,830	2,220	2,940	3,110
		Sf	0.125–0.375			0.0076	0.0069	0.006	0.0053	0.0076	0.0069	0.006	0.0053
#12 x 1¼	XM Medium-Head Metal Screw (XMQ114S1224, XMQ114B1224)	Qf	0.375			1,565	1,895	2,510	3,110	1,780	2,200	2,995	3,110
			0.25			1,565	1,895	2,510	3,110	1,780	2,200	2,995	3,110
			0.1875			1,215	1,625	2,475	3,110	1,655	2,050	2,790	3,110
			0.125			1,215	1,625	2,475	3,110	1,495	1,850	2,520	3,110
		Sf	0.125–0.375			0.0076	0.0069	0.006	0.0053	0.0076	0.0069	0.006	0.0053

1. P_{ss} and P_{ts} are nominal shear strength and nominal tension strength for the screw itself, respectively, and are the average (ultimate) value of all tests determined by independent laboratory testing.
2. The ASD and LRFD loads for tension are calculated using a safety factor Ω of 3.0 and the resistance factor ϕ of 0.5, respectively.
3. For tension connection: the smallest of the screw tension strength, pull-over strength and pull-out strength shall be used for design.

Structural Screw Pull-Over Strength with Steel Minimum Yield Strength F_y = 33 ksi

Size (in.)	Model (Model No.)	Design Basis	Reference Pull-Over Loads (lb.) GR33 Deck Thickness, ga. (in.) 22 (0.0295)	20 (0.0358)	18 (0.0474)	16 (0.0598)	GR40 / GR50 Deck Thickness, ga. (in.) 22 (0.0295)	20 (0.0358)	18 (0.0474)	16 (0.0598)
#12 x 1¼	XL Large-Head Metal Screw[2] (XLQ114T1224, XLQ114B1224)	Nominal	1,295	1,705	2,490	2,775	1,575	1,990	2,820	3,075
		LRFD	840	1,100	1,625	1,810	1,020	1,285	1,840	2,005
		ASD	525	690	1,015	1,135	635	800	1,150	1,255
#12 x 1¼	XM Medium-Head Metal Screw[2] (XLM114S1224, XLM114B1224)	Nominal	750	1,020	1,400	1,930	910	1,190	1,590	2,135
		LRFD	485	655	915	1,260	595	775	1,035	1,395
		ASD	305	415	570	790	370	485	650	870

1. Values are based on steel members with a minimum yield strength of F_y = 33 ksi and tensile strength of F_u = 45 ksi.
2. The values for 16 ga., 18 ga., 20 ga. and 22 ga. are based on tests per AISI Standard Test Method S905.
3. The safety factor Ω and resistance factor ϕ used to determine the ASD and LRFD strengths are based on AISI S100.
4. The values for 16 ga., 18 ga., 20 ga. and 22 ga. are based on the calculations per AISI S100.
5. For tension connection: the smallest of the screw tension strength, pull-over strength and pull-out strength shall be used for design.

Structural Screw Pull-Out Strength

Size (in.)	Model (Model No.)	Design Basis	Reference Pull-Out Loads (lb.) Support Thickness ⅛"	3/16"	¼"	⅜"
#12 x 1¼	XL Large-Head Metal Screw (XLQ114T1224, XLQ114B1224) XM Medium-Head Metal Screw (XMQ114S1224, XMQ114B1224)	Minimum Tensile Strength of Steel, F_u = 65 ksi				
		Nominal	1,490	2,240	2,985	4,475
		LRFD	745	1,120	1,490	2,240
		ASD	495	745	995	1,490
		Minimum Tensile Strength of Steel, F_u = 50 ksi				
		Nominal	1,150	1,720	2,295	3,445
		LRFD	575	860	1,150	1,720
		ASD	385	575	765	1,150

1. Values are based on calculations per AISI S100.
2. The tabulated ASD and LRFD loads are based upon a safety factor Ω of 3.0 and the resistance factor ϕ of 0.5.
3. For tension connection: the smallest of the screw tension strength, pull-over strength and pull-out strength shall be used for design.

For more information regarding these tables, please refer to IAPMO UES ER-326.

C-F-2019TECHSUP ©2019 SIMPSON STRONG-TIE COMPANY INC.

FD Fastener Designer

Find fasteners faster.

FF Fastener Finder

Our web apps are designed to save time by helping you find the right fastening solutions quickly. Calculate loads and get Simpson Strong-Tie screw alternatives for common applications with the Fastener Designer tool. And use Fastener Finder to explore our extensive array of screws and nails.

Visit **strongtie.com/software** and find the exact product you need in seconds.

SIMPSON Strong-Tie®

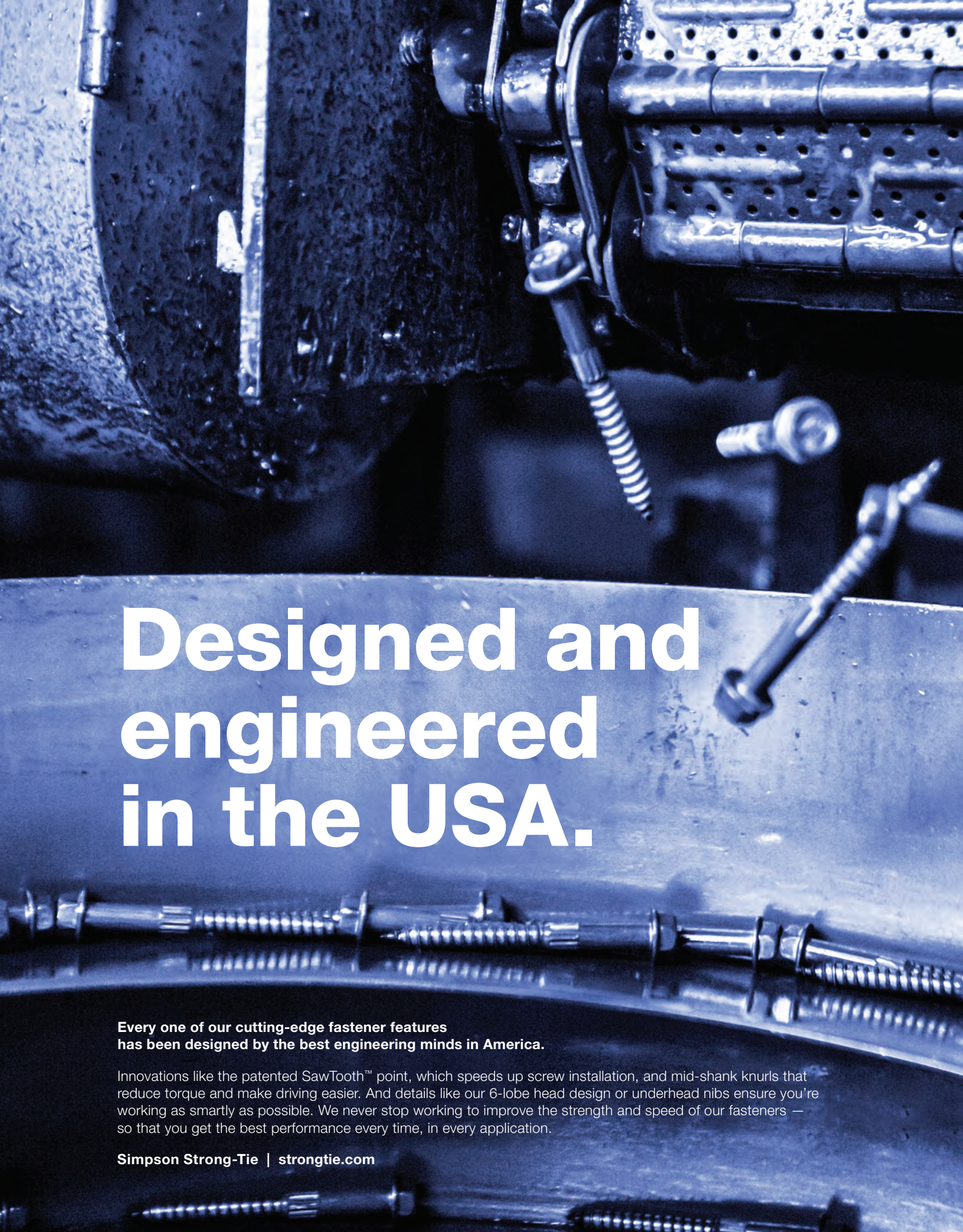
Designed and engineered in the USA.
Every one of our cutting-edge fastener features has been designed by the best engineering minds in America.
Innovations like the patented SawTooth™ point, which speeds up screw installation, and mid-shank knurls that reduce torque and make driving easier. And details like our 6-lobe head design or underhead nibs ensure you're working as smartly as possible. We never stop working to improve the strength and speed of our fasteners — so that you get the best performance every time, in every application.
Simpson Strong-Tie | strongtie.com

At Simpson Strong-Tie, we do innovation a little differently. It's part of our legacy. Part of our mission. And part of our future. Through precision engineering and rigorous testing, we're pushing the boundaries of product design to meet ever-greater challenges of the industry. It's our job to meet your most demanding applications with the fastest, easiest and strongest solutions ever invented. And it's our promise to deliver the expert knowledge and support you need to build safer and smarter.

Perfection is a never-ending process.

Fastening Reimagined.

C-F-2019TECHSUP
Effective 7/1/2019 Expires 6/30/2021
© 2019 Simpson Strong-Tie Company Inc.